CITY OF PINOLE
PUBLIC WORKS

PINOLE CONTRA COSTA COUNTY CALIFORNIA

PLANS FOR
PINOLE/HERCULES
WATER POLLUTION CONTROL PLANT UPGRADES

SEPTEMBER 30, 2015
ISSUED FOR BID

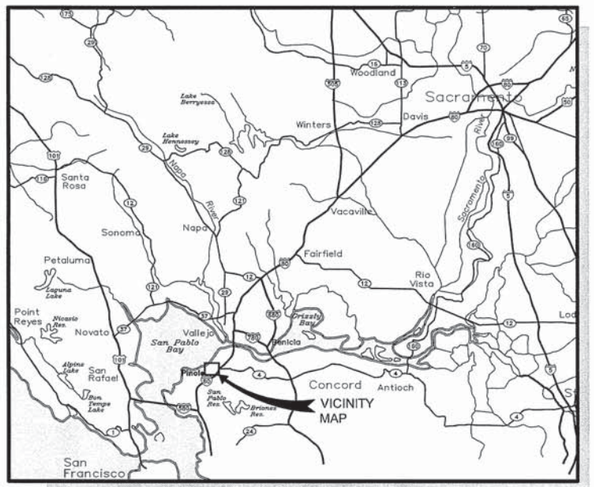

LOCATION MAP N

APPROVED FOR BIDDING: _____ 9/1/2015 DATE

DEAN ALLISON
CITY OF PINOLE DIRECTOR OF PUBLIC WORKS

PREPARED BY: _____ 9/30/15 DATE

CRAIG OLSON, P.E.
HDR PROJECT MANAGER

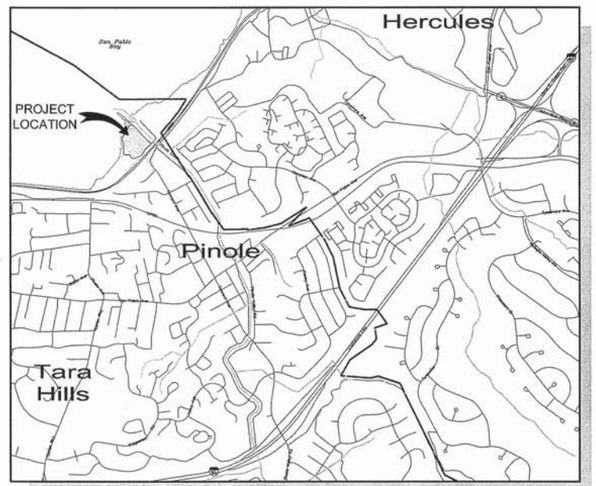

VICINITY MAP N

FILE: 215786-00G001.dwg
DATE: Aug 31, 2015 - 1:43:03pm, rsnider

HDR
HDR Engineering, Inc.

ISSUE	DATE	DESCRIPTION
A	JUNE 2015	ISSUED FOR BID

PROJECT MANAGER	C. OLSON
DESIGNED	R. NATOLI
DESIGNED	
CHECKED	C. OLSON
DRAWN	B. DOWN
DATE	JUNE 30, 2015
PROJECT NUMBER	215786

REGISTERED PROFESSIONAL ENGINEER
CRAIG A. OLSON
NO. 39819
EXP. 12/31/15
CIVIL
STATE OF CALIFORNIA
06/30/15

CITY OF PINOLE CALIFORNIA 1903

PINOLE/HERCULES
WATER POLLUTION
CONTROL PLANT UPGRADE
CLIENT PN

GENERAL

TITLE SHEET, LOCATION AND VICINITY MAPS

0 1" 2"

FILENAME	215786-00G001
SCALE	NONE
SHEET	00G001

GENERAL

1.	00G001	TITLE SHEET, LOCATION AND VICINITY MAPS
2.	00G002	SHEET INDEX
3.	00G003	ABBREVIATIONS
4.	00G004	LEGEND AND SYMBOLS
5.	00G005	DESIGNATION SYSTEM
6.	00G006	PIPING SYSTEMS SCHEDULE AND ABBREVIATIONS
7.	00G007	OVERALL SITE KEY PLAN
8.	00G008	CONTRACTOR AND TRUCK SITE ACCESS
9.	00G009	CONTRACTOR STAGING AREA
10.	00G010	PROCESS FLOW SCHEMATIC
11.	00G011	DESIGN CRITERIA
12.	00G012	HYDRAULIC PROFILE 1
13.	00G013	HYDRAULIC PROFILE 2
14.	00G014	CONSTRUCTION SEQUENCING STAGE I
15.	00G015	CONSTRUCTION SEQUENCING STAGE II
16.	00G016	CONSTRUCTION SEQUENCING STAGE III

DEMOLITION

17.	00D001	GENERAL NOTES
18.	00D002	OVERALL SITE KEY PLAN
19.	02D101	PAVING AND GRADING PLAN NORTH PLANT
20.	02D102	PAVING AND GRADING PLAN SOUTH PLANT
21.	03D101	YARD PIPING PLAN AREA 1
22.	03D102	YARD PIPING PLAN AREA 2
23.	03D103	YARD PIPING PLAN AREA 3
24.	03D104	YARD PIPING PLAN AREA 4
25.	12D101	HEADWORKS LOWER AND INTERMEDIATE LEVEL PLANS
26.	12D102	HEADWORKS UPPER LEVEL PLAN
27.	12D103	HEADWORKS SECTIONS
28.	12D104	MAINTENANCE BUILDING PLAN, PHOTO AND DETAILS
29.	21D101	PRIMARY CLARIFIERS SITE KEY PLAN
30.	21D102	PRIMARY CLARIFIER NO 1 PLAN AND SECTION
31.	21D103	PRIMARY CLARIFIER NO 2 PLAN AND SECTION
32.	21D104	PRIMARY CLARIFIER NO 3 PLAN
33.	21D105	PRIMARY CLARIFIER NO 3 SECTIONS
34.	22D101	PRIMARY FLOW DISTRIBUTION PLAN
35.	22D102	PRIMARY FLOW DISTRIBUTION SECTIONS
36.	23D101	PRIMARY CLARIFIER NO 3 SCUM & SLUDGE PUMP STATION PLAN AND SECTIONS
37.	31D101	AERATION BASINS PLAN AT ELEVATION 100.00
38.	31D102	AERATION BASINS PLAN AT ELEVATION 112.0
39.	31D103	AERATION BASINS PLAN AT ELEVATION 115.00
40.	31D104	AERATION BASINS SECTIONS
41.	31D105	AERATION BASINS PHOTOGRAPHS
42.	32D101	SECONDARY CLARIFIER SPLITTER BOX PLAN AND SECTIONS
43.	41D101	SECONDARY CLARIFIER NO 1 AND NO 2 PLAN
44.	41D102	SECONDARY CLARIFIER NO 1 AND NO 2 TYPICAL SECTION
45.	42D101	RAS/WAS PUMP STATIONS NO 1 AND 2 DEMOLITION PLAN
46.	42D102	RAS/WAS PUMP STATIONS NO 1 AND 2 DEMOLITION SECTIONS
47.	51D101	BLOWER BUILDING PLAN
48.	51D102	BLOWER BUILDING SECTIONS
49.	61D101	SOLIDS HANDLING AREA PLAN
50.	61D102	SOLIDS HANDLING AREA SECTIONS
51.	66D101	POLYMER BUILDING PLAN
52.	66D102	POLYMER BUILDING SECTIONS
53.	71D101	CHLORINE CONTACT BASIN PLAN AND SECTIONS
54.	75D101	BISULFITE STORAGE AREA PLAN AND PHOTOGRAPHS
55.	85D101	DIGESTER GAS BURNER PLAN, PHOTO AND SECTIONS
56.	91D101	EFFLUENT PUMP STATION UPPER LEVEL PLAN
57.	91D102	EFFLUENT PUMP STATION SECTIONS
58.	91D103	EFFLUENT PUMP STATION PHOTOS AND NOTES

CIVIL

59.	00C001	CIVIL DETAILS 1
60.	00C002	CIVIL DETAILS 2
61.	00C003	CIVIL DETAILS 3
62.	00C004	CIVIL DETAILS 4
63.	00C005	CIVIL DETAILS 5
64.	00C006	CIVIL DETAILS 6
65.	00C007	CIVIL DETAILS 7
66.	02C101	GRADING AND PAVING PLAN AREA 1
67.	02C102	GRADING AND PAVING PLAN AREA 2
68.	02C103	GRADING AND PAVING PLAN AREA 3
69.	02C104	GRADING AND PAVING PLAN AREA 4
70.	02C105	GRADING AND PAVING PLAN AREA 5
71.	02C106	GRADING AND PAVING PLAN AREA 6
72.	02C107	RETAINING WALL PROFILE AND DETAIL
73.	03C101	YARD PIPING PLAN AREA 1
74.	03C102	YARD PIPING PLAN AREA 2
75.	03C103	YARD PIPING PLAN AREA 3
76.	03C104	YARD PIPING PLAN AREA 4
77.	03C105	YARD PIPING PLAN AREA 5
78.	03C106	YARD PIPING PLAN AREA 6
79.	03C107	YARD PIPING PROFILES 1
80.	03C108	YARD PIPING PROFILES 2
81.	03C109	YARD PIPING PROFILES 3
82.	03C110	YARD PIPING PROFILES 4
83.	06C101	OUTFALL PIPELINE MODIFICATIONS

LANDSCAPING

84.	00L001	SITE PLAN – WALKING PATH LAYOUT
85.	00L002	MISCELLANEOUS DETAILS 1
86.	00L003	MISCELLANEOUS DETAILS 2

ARCHITECTURAL

87.	00A103	CODE REVIEW PLAN SOLIDS HANDLING BUILDING FIRST FLOOR
88.	00A104	CODE REVIEW PLAN SOLIDS HANDLING BUILDING SECOND FLOOR
89.	00A106	DOOR AND LOUVER SCHEDULE
90.	01A101	PUBLIC WORKS BUILDING ELEVATIONS
91.	14A101	ELECTRICAL BUILDING FLOOR AND ROOF PLANS
92.	14A102	ELECTRICAL BUILDING ELEVATIONS
93.	14A103	ELECTRICAL BUILDING SECTIONS
94.	61A101	SOLIDS HANDLING BUILDING FIRST FLOOR PLAN
95.	61A102	SOLIDS HANDLING BUILDING SECOND FLOOR PLAN
96.	61A103	SOLIDS HANDLING BUILDING ROOF PLAN
97.	61A104	SOLIDS HANDLING BUILDING ELEVATIONS
98.	66A101	MAINTENANCE SHOP FIRST FLOOR AND ROOF PLANS
99.	66A102	MAINTENANCE SHOP ROOF SECTIONS

STRUCTURAL

100.	00S00	DESIGNATION KEY PLAN
101.	00S01	GENERAL STRUCTURAL NOTES 1
102.	00S02	GENERAL STRUCTURAL NOTES 2
103.	00S03	SPECIAL INSPECTIONS 1
104.	00S04	SPECIAL INSPECTIONS 2
105.	00S05	TYPICAL CONCRETE DETAILS 1
106.	00S06	TYPICAL CONCRETE DETAILS 2
107.	00S07	TYPICAL CONCRETE DETAILS 3
108.	00S08	TYPICAL CONCRETE DETAILS 4
109.	00S09	TYPICAL CONCRETE REINFORCING DETAILS
110.	00S10	TYPICAL PILE DETAILS AND SCHEDULE
111.	00S11	GRADE BEAM AND CONCRETE WALL SCHEDULES AND DETAILS
112.	00S12	TYPICAL CONCRETE BEAM/SLAB DETAILS AND SCHEDULE
113.	00S13	TYPICAL MASONRY DETAILS
114.	00S14	TYPICAL STEEL DETAILS 1
115.	00S15	TYPICAL STEEL DETAILS 2
116.	00S16	TYPICAL STEEL DETAILS 3
117.	00S17	TYPICAL METAL DECK DETAILS
118.	00S18	TYPICAL GRATING DETAILS
119.	00S19	TYPICAL RAILING DETAILS 1
120.	00S20	TYPICAL RAILING DETAILS 2
121.	01S101	PUBLIC WORKS BUILDING FOUNDATION PLAN AND DETAILS
122.	12S101	HEADWORKS FOUNDATION PLAN
123.	12S102	HEADWORKS INTERMEDIATE PLAN
124.	12S103	HEADWORKS TOP PLAN
125.	12S104	HEADWORKS MONORAIL FRAMING PLAN AND SECTIONS
126.	12S105	HEADWORKS SECTIONS 1
127.	12S106	HEADWORKS SECTIONS 2
128.	12S107	HEADWORKS SECTIONS 3
129.	12S108	HEADWORKS SECTIONS AND DETAILS
130.	13S101	GRIT REMOVAL PILE LAYOUT PLAN
131.	13S102	GRIT REMOVAL FOUNDATION PLAN
132.	13S103	GRIT REMOVAL INTERMEDIATE PLAN AT ELEVATION 114.50'
133.	13S104	GRIT REMOVAL INTERMEDIATE PLAN AT ELEVATION 121.00'
134.	13S105	GRIT REMOVAL TOP PLAN
135.	13S106	GRIT REMOVAL SECTIONS 1
136.	13S107	GRIT REMOVAL SECTIONS 2
137.	13S108	GRIT REMOVAL SECTIONS 3
138.	13S109	GRIT REMOVAL SECTIONS 4
139.	13S110	GRIT REMOVAL SECTIONS 5
140.	14S101	ELECTRICAL BUILDING AND GENERATOR PILE LAYOUT PLAN
141.	14S102	ELECTRICAL BUILDING AND GENERATOR FOUNDATION PLAN
142.	14S103	ELECTRICAL BUILDING ROOF FRAMING PLAN
143.	14S104	ELECTRICAL BUILDING STRUCTURAL ELEVATIONS
144.	14S105	ELECTRICAL BUILDING AND GENERATOR SECTIONS 1
145.	14S106	ELECTRICAL BUILDING AND GENERATOR SECTIONS 2
146.	14S107	ELECTRICAL BUILDING DETAILS
147.	15S101	HEADWORKS ODOR CONTROL PAD PLAN AND SECTION
148.	21S101	PRIMARY CLARIFIER NO 3 FOUNDATION PLAN
149.	21S102	PRIMARY CLARIFIER NO 3 TOP PLAN
150.	21S103	PRIMARY CLARIFIER NO 3 SECTION
151.	21S104	PRIMARY CLARIFIER NO 3 ENLARGED PLAN AND DETAILS
152.	21S105	PRIMARY CLARIFIER NO 3 DETAILS
153.	31S101	AERATION BASINS EXPANSION FOUNDATION PLAN
154.	31S102	AERATION BASINS EXPANSION PLAN AT 109.5
155.	31S103	AERATION BASINS EXPANSION TOP PLAN
156.	31S104	AERATION BASINS EXPANSION SECTIONS 1
157.	31S105	AERATION BASINS EXPANSION SECTIONS 2
158.	31S106	AERATION BASINS EXPANSION SECTIONS 3
159.	31S107	AERATION BASINS EXPANSION SECTIONS 4
160.	31S108	AERATION BASINS EXPANSION SECTIONS AND DETAILS
161.	31S109	AERATION BASINS EXPANSION SECTIONS AND DETAILS
162.	31S110	AERATION BASINS EXPANSION SECTIONS AND DETAILS
163.	31S111	AERATION BASINS EXPANSION SECTIONS AND DETAILS
164.	31S112	AERATION BASINS EXPANSION ENLARGED PLANS, SECTIONS AND DETAILS
165.	32S101	PRIMARY EFFLUENT AND MIXED LIQUOR FLOW SPLIT BOX PLANS
166.	32S102	PRIMARY EFFLUENT AND MIXED LIQUOR FLOW SPLIT BOX SECTIONS 1
167.	32S103	PRIMARY EFFLUENT AND MIXED LIQUOR FLOW SPLIT BOX SECTIONS 2
168.	32S104	PRIMARY EFFLUENT AND MIXED LIQUOR FLOW SPLIT BOX SECTIONS 3
169.	32S105	PRIMARY EFFLUENT AND MIXED LIQUOR FLOW SPLIT BOX SECTIONS 4
170.	32S106	PRIMARY EFFLUENT AND MIXED LIQUOR FLOW SPLIT BOX SECTIONS AND DETAILS
171.	41S101	SECONDARY CLARIFIERS NO 1 AND NO 2 FOUNDATION PLAN
172.	41S102	SECONDARY CLARIFIERS NO 1 AND NO 2 TOP PLAN
173.	41S103	SECONDARY CLARIFIERS NO 1 AND NO 2 SECTION
174.	41S104	SECONDARY CLARIFIERS NO 1 AND NO 2 ENLARGED PLAN AND SECTIONS
175.	41S105	SECONDARY CLARIFIER NO 1 AND NO 2 SECTIONS
176.	42S101	EXISTING RAS/WAS PUMPING STATIONS ELECTRICAL PADS PLAN AND SECTION
177.	51S101	BLOWER BUILDING FLOOR PLAN
178.	51S102	BLOWER BUILDING SECTIONS
179.	51S103	BLOWER BUILDING DETAILS
180.	61S101	SOLIDS HANDLING BUILDING PILE LAYOUT PLAN
181.	61S102	SOLIDS HANDLING BUILDING FOUNDATION PLAN
182.	61S103	SOLIDS HANDLING BUILDING SECOND FLOOR FRAMING PLAN
183.	61S104	SOLIDS HANDLING BUILDING CRANE/ROOF FRAMING PLAN
184.	61S105	SOLIDS HANDLING STRUCTURAL ELEVATIONS
185.	61S106	SOLIDS HANDLING BUILDING SECTION A
186.	61S107	SOLIDS HANDLING BUILDING SECTION C
187.	61S108	SOLIDS HANDLING BUILDING DETAILS – I
188.	61S109	SOLIDS HANDLING BUILDING DETAILS – II
189.	61S110	SOLIDS HANDLING BUILDING DETAILS – III
190.	61S111	SOLIDS HANDLING BUILDING SECTIONS AND DETAILS
191.	63S101	ODOR CONTROL PAD SECTION
192.	64S101	GRAVITY SLUDGE THICKENER FOUNDATION PLAN
193.	64S102	GRAVITY SLUDGE THICKENER TOP PLAN
194.	64S103	GRAVITY SLUDGE THICKENER SECTION
195.	64S104	GRAVITY SLUDGE THICKENER ENLARGED PLANS, SECTIONS AND DETAILS
196.	66S101	MAINTENANCE SHOP FLOOR AND ROOF PLANS
197.	66S102	MAINTENANCE BUILDING SECTIONS AND DETAILS
198.	71S101	CHLORINE CONTACT BASIN FOUNDATION PLAN
199.	71S102	CHLORINE CONTACT BASIN TOP PLAN
200.	71S103	CHLORINE CONTACT BASIN SECTIONS 1
201.	71S104	CHLORINE CONTACT BASIN SECTIONS 2
202.	75S101	HYPOCHLORITE/BISULFITE CHEMICAL STORAGE AND FEED PILE LAYOUT PLAN
203.	75S102	HYPOCHLORITE/BISULFITE CHEMICAL STORAGE AND FEED FLOOR PLAN
204.	75S103	HYPOCHLORITE/BISULFITE CHEMICAL STORAGE AND FEED ELEVATIONS
205.	75S104	HYPOCHLORITE/BISULFITE SECTIONS
206.	76S101	FERRIC CHLORIDE CHEMICAL STORAGE AND FEED PLANS
207.	76S102	FERRIC CHLORIDE CHEMICAL STORAGE AND FEED SECTIONS
208.	77S101	SODIUM HYDROXIDE CHEMICAL STORAGE AND FEED PLAN
209.	77S102	SODIUM HYDROXIDE CHEMICAL STORAGE AND FEED SECTIONS
210.	85S101	DIGESTER GAS BURNER PLAN AND SECTIONS
211.	91S101	EFFLUENT PUMPING STATION AND SURGE TANK LOWER LEVEL MODIFICATIONS PLAN
212.	91S102	EFFLUENT PUMPING STATION AND SURGE TANK UPPER LEVEL MODIFICATIONS PLAN
213.	91S103	EFFLUENT PUMPING STATION AND SURGE TANK SECTIONS AND DETAILS
214.	91S104	EFFLUENT PUMP STATION SURGE TANK SECTION

PROCESS

215.	00P001	STANDARD DETAILS 1
216.	00P002	STANDARD DETAILS 2
217.	00P003	STANDARD DETAILS 3
218.	00P004	STANDARD DETAILS 4
219.	00P005	STANDARD DETAILS 5
220.	00P006	STANDARD DETAILS 6
221.	00P007	STANDARD DETAILS 7
222.	11P101	INFLUENT SEWER FLUMES FLOW MEASUREMENT SECTIONS & DETAILS
223.	12P101	HEADWORKS LOWER PLAN
224.	12P102	HEADWORKS TOP DECK PLAN
225.	12P103	HEADWORKS SECTION 1
226.	12P104	HEADWORKS SECTION 2
227.	12P105	HEADWORKS SECTIONS 3
228.	12P106	HEADWORKS SECTION 4
229.	13P101	GRIT BASIN LOWER PLAN
230.	13P102	GRIT BASIN TOP DECK PLAN
231.	13P103	GRIT BASIN SECTION 1
232.	13P104	GRIT BASIN SECTION 2
233.	13P105	GRIT BASIN SECTION 3
234.	13P106	GRIT BASIN SECTIONS 4
235.	13P107	GRIT BASIN SECTIONS 5
236.	13P108	GRIT BASIN SECTIONS AND DETAILS
237.	15P101	HEADWORKS ODOR CONTROL FACILITY PLAN AND SECTION
238.	21P101	PRIMARY CLARIFIERS KEY PLAN
239.	21P102	PRIMARY CLARIFIERS DETAILS 1
240.	21P103	PRIMARY CLARIFIERS DETAILS 2
241.	21P111	EXISTING PRIMARY CLARIFIER NO 1 MODIFICATIONS PLAN AND SECTION
242.	21P121	EXISTING PRIMARY CLARIFIER NO 2 MODIFICATIONS PLAN AND SECTION
243.	21P131	PRIMARY CLARIFIER NO 3 PLAN
244.	21P132	PRIMARY CLARIFIER NO 3 SECTION 1
245.	21P133	PRIMARY CLARIFIER NO 3 SECTION 2
246.	21P134	PRIMARY CLARIFIER NO 3 SECTIONS 3
247.	22P101	EXISTING PRIMARY FLOW DISTRIBUTION MODIFICATIONS PLAN
248.	22P102	EXISTING PRIMARY FLOW DISTRIBUTION MODIFICATIONS SECTIONS
249.	31P101	EXISTING AERATION BASINS LOWER LOWER LEVEL EXPANSION PLAN
250.	31P102	EXISTING AERATION BASINS CHANNEL LEVEL EXPANSION PLAN
251.	31P103	EXISTING AERATION BASINS DECK LEVEL EXPANSION PLAN
252.	31P104	EXISTING AERATION BASINS EXPANSION SECTIONS
253.	31P105	EXISTING AERATION BASINS EXPANSION SECTIONS
254.	31P106	EXISTING AERATION BASINS EXPANSION SECTIONS
255.	31P107	EXISTING AERATION BASINS EXPANSION SECTIONS
256.	31P108	EXISTING AERATION BASINS EXPANSION SECTIONS AND DETAILS
257.	32P101	PRIMARY EFFLUENT AND MIXED LIQUOR FLOW SPLIT STRUCTURE SECTIONAL PLAN
258.	32P102	PRIMARY EFFLUENT AND MIXED LIQUOR FLOW SPLIT STRUCTURE DECK PLAN
259.	32P103	PRIMARY EFFLUENT AND MIXED LIQUOR FLOW SPLIT STRUCTURE SECTIONS
260.	32P104	PRIMARY EFFLUENT AND MIXED LIQUOR FLOW SPLIT STRUCTURE SECTIONS
261.	32P105	PRIMARY EFFLUENT AND MIXED LIQUOR FLOW SPLIT STRUCTURE SECTIONS
262.	32P106	PRIMARY EFFLUENT AND MIXED LIQUOR FLOW SPLIT STRUCTURE SECTIONS
263.	41P101	SECONDARY CLARIFIER NO 1 AND NO 2 PLAN
264.	41P102	SECONDARY CLARIFIER NO 1 AND NO 2 SECTION AND DETAILS
265.	41P103	SECONDARY CLARIFIER NO 1 AND NO 2 SECTION AND DETAILS
266.	42P101	EXISTING RAS/WAS PUMPING STATIONS MODIFICATION PLAN
267.	42P102	EXISTING RAS/WAS PUMPING STATIONS MODIFICATIONS SECTIONS
268.	51P101	EXISTING BLOWER BUILDING MODIFICATIONS PLAN
269.	51P102	EXISTING BLOWER BUILDING MODIFICATIONS SECTIONS AND DETAILS
270.	61P101	SOLIDS HANDLING BUILDING FLOOR LEVEL PLAN
271.	61P102	SOLIDS HANDLING BUILDING ROOF LEVEL PLAN
272.	61P103	SOLIDS HANDLING BUILDING SECTIONS I
273.	61P104	SOLIDS HANDLING BUILDING SECTIONS II
274.	63P101	SOLIDS HANDLING ODOR CONTROL FACILITY PLAN AND SECTION
275.	64P101	GRAVITY SLUDGE THICKENER PLAN
276.	64P102	GRAVITY SLUDGE THICKENER SECTIONS
277.	71P101	CHLORINE CONTACT BASINS BOTTOM PLAN
278.	71P102	CHLORINE CONTACT BASINS TOP PLAN
279.	71P103	CHLORINE CONTACT BASINS SECTIONS
280.	71P104	CHLORINE CONTACT BASINS SECTIONS AND DETAILS
281.	73P101	EMERGENCY OUTFALL STRUCTURE MODIFICATIONS
282.	75P101	CHEMICAL STORAGE FLOOR PLAN
283.	75P102	CHEMICAL STORAGE SECTIONS 1
284.	75P103	CHEMICAL FEED PUMPING AND ANALYZER ROOM PLAN AND ELEVATIONS
285.	76P101	FERRIC CHLORIDE CHEMICAL STORAGE AND FEED PLAN
286.	77P101	SODIUM HYDROXIDE STORAGE AND FEED PLAN
287.	85P101	DIGESTER GAS BURNER PLAN AND SECTIONS
288.	91P101	EFFLUENT PUMPING STATION LOWER LEVEL MODIFICATIONS PLAN
289.	91P102	EFFLUENT PUMPING STATION UPPER LEVEL MODIFICATIONS PLAN
290.	91P103	EFFLUENT PUMPING STATION SECTIONS
291.	91P104	SURGE TANK SECTION AND DETAILS

MECHANICAL

292.	00M001	SCHEDULES AND SEQUENCE OF OPERATIONS
293.	00M002	DETAILS 1
294.	14M101	ELECTRICAL BUILDING FLOOR PLAN
295.	14M102	ELECTRICAL BUILDING SECTIONS
296.	61M101	SOLIDS HANDLING BUILDING LOWER FLOOR PLAN
297.	61M102	SOLIDS HANDLING BUILDING UPPER FLOOR PLAN
298.	66M101	MAINTENANCE SHOP FLOOR AND ROOF PLAN
299.	67M101	CORPORATION YARD BUILDING HVAC MODIFICATIONS

ELECTRICAL

300.	00E001	SYMBOLS LEGEND
301.	00E009	PRIMARY SERVICE SINGLE LINE DIAGRAM
302.	00E012	MCC–B SINGLE LINE DIAGRAM
303.	00E013	MCC–M SINGLE LINE DIAGRAM
304.	00E014	MCC–N SINGLE LINE DIAGRAM
305.	00E023	CONTROL DIAGRAMS 1
306.	00E024	CONTROL DIAGRAMS 2
307.	00E025	CONTROL DIAGRAMS 3
308.	00E026	CONTROL DIAGRAMS 4
309.	00E030	ELECTRICAL SCHEDULES
310.	00E031	ELECTRICAL SCHEDULES
311.	00E033	EQUIPMENT LAYOUT/DETAILS
312.	00E034	DETAILS
313.	00E035	DETAILS
314.	00E036	DETAILS
315.	00E037	DETAILS
316.	00E103	SITE PLAN NORTH PLANT
317.	00E104	SITE PLAN SOUTH PLANT
318.	00E105	DUCT BANK SCHEDULES
319.	00E106	CONDUCTOR SCHEDULES
320.	01E101	PUBLIC WORKS ELECTRICAL PLAN
321.	12E101	HEADWORKS ELECTRICAL PLAN
322.	13E101	GRIT ELECTRICAL PLAN
323.	14E101	ELECTRICAL BLDG/GENERATOR AREA ELECTRICAL PLAN
324.	21E101	PRIMARY CLARIFIER 3 ELECTRICAL PLAN
325.	21E102	PRIMARY CLARIFIERS NO 1 AND NO 2 ELECTRICAL PLAN
326.	31E101	AERATION BASIN DECK LEVEL ELECTRICAL PLAN
327.	41E101	SECONDARY CLARIFIERS NO 1 AND NO 2 ELECTRICAL PLAN
328.	41E102	EXISTING SECONDARY CLARIFIERS NO 3, 4 AND 5 ELECTRICAL PLAN
329.	42E101	EXISTING RAS/WAS PUMPING STATIONS ELECTRICAL PLAN
330.	51E101	EXISTING BLOWER BUILDING POWER PLAN
331.	61E101	SOLIDS HANDLING BUILDING GROUND FLOOR ELECTRICAL PLAN
332.	61E102	SOLIDS HANDLING BUILDING GROUND FLOOR LIGHTING PLAN
333.	61E103	SOLIDS HANDLING BUILDING SECOND FLOOR ELECTRICAL PLAN
334.	61E104	GRAVITY SLUDGE THICKENER ELECTRICAL PLAN
335.	66E101	MAINTENANCE BUILDING ELECTRICAL PLAN
336.	71E101	CHLORINE CONTACT BASIN ELECTRICAL PLAN
337.	75E101	CHEMICAL STORAGE ELECTRICAL PLAN 1
338.	85E101	DIGESTER GAS BURNER ELECTRICAL PLAN
339.	91E101	EFFLUENT PUMP STATION ELECTRICAL PLAN

INSTRUMENTATION

340.	00I001	P&ID SYMBOLS LEGEND AND ABBREVIATIONS
341.	00I006	P&ID SCADA BLOCK DIAGRAM
342.	11I101	P&ID RAW SEWAGE FLOW
343.	12I101	P&ID RAW SEWAGE SCREENING
344.	12I102	P&ID INFLUENT PUMP STATION
345.	13I101	P&ID GRIT REMOVAL
346.	21I101	P&ID PRIMARY CLARIFICATION
347.	23I101	P&ID PRIMARY SCUM PUMPING
348.	25I101	P&ID PRIMARY SLUDGE PUMPING
349.	31I101	P&ID AERATION BASIN 1
350.	31I102	P&ID AERATION BASIN 2
351.	32I101	P&ID PRIMARY EFFLUENT AND RAS FLOW SPLIT
352.	41I101	P&ID SECONDARY CLARIFICATION 1
353.	41I102	P&ID SECONDARY CLARIFICATION 2
354.	42I101	P&ID RAS PUMPING STRUCTURE 1
355.	42I102	P&ID RAS PUMPING STRUCTURE 1
356.	42I103	P&ID RAS PUMPING STRUCTURE 2
357.	43I101	P&ID WAS PUMPING
358.	51I101	P&ID AERATION BLOWERS
359.	61I101	P&ID THICKENER 1
360.	61I102	P&ID THICKENER 2
361.	61I103	P&ID SOLIDS BLENDING/THICKENING
362.	62I101	P&ID SOLIDS DEWATERING
363.	65I101	P&ID SOLIDS POLYMER
364.	71I101	P&ID CHLORINE CONTACT
365.	75I101	P&ID SODIUM HYPOCHLORITE STORAGE AND FEED SYSTEM
366.	75I102	P&ID SODIUM BISULFITE STORAGE AND FEED SYSTEM
367.	76I101	P&ID FERRIC CHLORIDE STORAGE AND FEED SYSTEM
368.	77I101	P&ID SODIUM HYDROXIDE STORAGE AND FEED SYSTEM
369.	85I101	P&ID DIGESTER GAS FLARE SYSTEM
370.	91I101	P&ID EFFLUENT PUMPING

FILE: 215786-000002.dwg
DATE: Oct 06, 2015 - 10:18:49am, rsnider

HDR Engineering, Inc.

ISSUE	DATE	DESCRIPTION
A	JUNE 2015	ISSUED FOR BID

PROJECT MANAGER	C. OLSON
DESIGNED	R. NATOLI
DESIGNED	
CHECKED	C. OLSON
DRAWN	B. DOWN
DATE	JUNE 30, 2015
PROJECT NUMBER	~~215786~~

REGISTERED PROFESSIONAL ENGINEER
CRAIG A. OLSON
NO. 39819
EXP. 12/31/15
CIVIL
STATE OF CALIFORNIA
06-30-15

CITY OF PINOLE CALIFORNIA 1903

PINOLE/HERCULES
WATER POLLUTION
CONTROL PLANT UPGRADE
CLIENT PN

GENERAL

SHEET INDEX

0 1" 2"

FILENAME	215786-00G002
SCALE	NONE

SHEET **00G002**

A/C	AIR CONDITIONING
A/E	ARCHITECT/ENGINEER
A	AMP or ARCHITECTURAL (DWG DISCIPLINE)
AB	ANCHOR BOLT
ABC	AGGREGATE BASE COURSE
ABAN	ABANDON
AC	ALTERNATING CURRENT
ACK	ACKNOWLEDGE
ACP	ACOUSTIC CEILING PANEL or ASPHALTIC CONCRETE PAVEMENT
ACST	ACOUSTIC
AD	AREA DRAIN or ADDENDUM
ADDL	ADDITIONAL
ADH	ADHESIVE
ADJ	ADJUSTABLE or ADJACENT
AF	AMP FRAME or AMP FUSE
AFF	ABOVE FINISH FLOOR
AFG	ABOVE FINISH GRADE
AGGR	AGGREGATE
AI	AREA INLET
AIC	AMPS INTERRUPTING CAPACITY
ALIG	ALIGNMENT
ALUM	ALUMINUM
ALT	ALTERNATE or ALTITUDE
AM	ACOUSTICAL MATERIAL
AMB	AMBIENT
ANC	ANCHOR
AP	ACCESS PANEL
APRX	APPROXIMATE
APVD	APPROVED
ARCH	ARCHITECTURAL
ASSY	ASSEMBLY
AT	AMP TRIP
ATC	ACOUSTICAL TILE CEILING
ATM	ATMOSPHERE
AUTO	AUTOMATIC
AUX	AUXILIARY
AVE	AVENUE
AVG	AVERAGE
AWG	AMERICAN WIRE GAGE
AWT	ACOUSTICAL WALL TILE
B TO B	BACK TO BACK
BAL	BALANCE
BBD	BULLETIN BOARD
BC	BASE CABINET or BOTTOM CHORD or BOLT CENTER or BOLT CIRCLE
BD	BOARD
BE	BOTH ENDS or BELL END
BF	BOTH FACES or BOTTOM FACE or BLIND FLANGE or BOARD FEET
BITUM	BITUMINOUS
BKG	BACKING
BL	BASE LINE
BLDG	BUILDING
BLK	BLOCK
BLKG	BLOCKING
BM	BENCHMARK or BEAM
BOC	BACK OF CURB
BOD	BOTTOM OF DUCT
BOG	BOTTOM OF GRILLE
BOL	BOTTOM OF LOUVER
BOP	BOTTOM OF PIPE
BOR	BOTTOM OF REGISTER
BOT	BOTTOM
BOU	BOTTOM OF UNIT
BP	BASE PLATE
BRG	BEARING
BRGP	BEARING PLATE
BRKT	BRACKET
BS	BOTH SIDES
BTU	BRITISH THERMAL UNIT
BTW	BETWEEN
BTWLD	BUTT WELD
BU	BELL UP or BUILT UP
BUR	BUILT-UP ROOFING
BW	BOTH WAYS
BYP	BYPASS
C TO C	CENTER TO CENTER
C&G	CURB & GUTTER
C	CHANNEL (SHAPE) or CENTIGRADE or CONDUIT or CIVIL (DRAWING DISCIPLINE)
CAB	CABINET
CAP	CAPACITY
CAT	CATALOG
CAV	CAVITY
CB	CATCH BASIN
CCB	CONCRETE BLOCK
CCW	COUNTER CLOCKWISE
CDF	CONTROLLED DENSITY FILL
CE	CONCRETE EDGE
CER	CERAMIC
CF	CUBIC FEET (FOOT)
CFL	COUNTER FLASHING
CHFR	CHAMFER
CHBD	CHALKBOARD
CHD	CHORD
CHH	COMMUNICATION HANDHOLE
CI	CURB INLET
CIP	CAST-IN-PLACE
CIPB	CONCRETE INTERLOCKING PAVER BALLAST
CIRC	CIRCULATION or CIRCULAR
CJ	CONSTRUCTION JOINT
CKT	CIRCUIT
CL	CENTERLINE or CLASS or CLOSE
CLG	CEILING
CLJ	CONTROL JOINT
CLKG	CAULKING
CLR	CLEAR
CMH	COMMUNICATION MANHOLE
CMU	CONCRETE MASONRY UNIT
CO	CLEAN OUT or CONCRETE OPENING
COL	COLUMN
COM	COMMON
COMB	COMBINATION
COMM	COMMUNICATION
COMP	COMPOSITION or COMPOSITE
CONC	CONCENTRIC or CONCRETE
CONN	CONNECTION
CONST	CONSTRUCTION
CONT	CONTINUOUS
CONTR	CONTRACTOR
COOR	COORDINATE
COR	CORNER
CORR	CORROSIVE or CORRUGATED
CP	CHECKER PLATE or CONTROL POINT
CPLG	COUPLING
CPRSR	COMPRESSOR
CRL	CORROSION RESISTANT LINING
CSC	COMPRESSION SLEEVE COUPLING
CSK	COUNTERSINK
CSS	CLINIC SERVICE SINK
CT	CERAMIC TILE
CTR	CENTER
CTRL	CONTROL
CVT	CULVERT
CU	COPPER or CUBIC
CW	CLOCKWISE
CY	CUBIC YARD
d	PENNY (NAIL MEASURE)
D	DEEP or DIFFUSER
DB	DUCT BANK or DECIBEL or DRY BULB
DBA	DEFORMED BAR ANCHOR
DBL	DOUBLE
DC	DIRECT CURRENT
DEG	DEGREE
DEG C	DEGREE CENTIGRADE
DEG F	DEGREE FAHRENHEIT
DEMO	DEMOLITION
DEP	DEPRESSED
DEPT	DEPARTMENT
DET	DETAIL
DI	DROP INLET or DUCTILE IRON
DIA	DIAMETER
DIAG	DIAGONAL or DIAGRAM
DIFF	DIFFERENTIAL or DIFFERENCE
DIM	DIMENSION
DISCH	DISCHARGE
DIST	DISTANCE or DISTRIBUTION
DIV	DIVISION
DL	DEAD LOAD
DMJ	DOUBLE MECHANICAL JOINT
DMPF	DAMP PROOFING
DN	DOWN
DO	DISSOLVED OXYGEN or DITTO
DP	DEPTH
DPDT	DOUBLE POLE, DOUBLE THROW
DPST	DOUBLE POLE, SINGLE THROW
DS	DOWN SPOUT
DT	DOUBLE TEE or DRIP TRAP ASSEMBLY
DUP	DUPLICATE
DWG	DRAWING
DWL	DOWEL
DWR	DRAWER
E	EAST or ELECTRICAL (DWG DISCIPLINE)
EA	EACH or EXHAUST AIR
EC	ELECTRICAL CONTRACTOR
ECC	ECCENTRIC
ED	EQUIPMENT DRAIN
EDB	ELECTRICAL DUCT BANK
EE	EACH END
EF	EACH FACE
EFF	EFFLUENT or EFFICIENCY
EHH	ELECTRICAL HANDHOLE
EIFS	EXTERIOR INSULATION & FINISH SYSTEM
EJ	EXPANSION JOINT
EL	ELBOW or ELEVATION
ELEC	ELECTRICAL
EMBD	EMBEDDED
EMER	EMERGENCY
EMH	ELECTRICAL MANHOLE
ENCL	ENCLOSURE
ENGR	ENGINEER
ENTR	ENTRANCE
EOP	EDGE OF PAVEMENT
EQ	EQUAL
EQUIP	EQUIPMENT
EQUIV	EQUIVALENT
ES	EACH SIDE or EQUAL SPACE or EMERGENCY SHOWER
ESEW	EMERGENCY SHOWER AND EYE WASH
EST	ESTIMATE
EW	EACH WAY or EMERGENCY EYE/FACE WASH
EWC	ELECTRIC WATER COOLER
EWEF	EACH WAY, EACH FACE
EWTB	EACH WAY, TOP AND BOTTOM
EXC	EXCAVATION
EXH	EXHAUST
EXST	EXISTING
EXP	EXPANSION or EXPOSED
EXT	EXTERIOR or EXTERNAL or EXTENSION
F&B	FACE & BYPASS
F TO F	FACE TO FACE
FAB	FABRICATE
FB	FLOOR BEAM
FBD	FIBERBOARD
FBG	FIBERGLASS
FBM	BOARD FOOT MEASURE
FBO	FURNISHED BY OWNER
FC	FLUSHING CONNECTION
FCA	FLANGED COUPLING ADAPTER
FD	FLOOR DRAIN
FDC	FLEXIBLE DUCT CONNECTION
FDTN	FOUNDATION
FDR	FEEDER
FE	FLANGED END
FEC	FIRE EXTINGUISHER CABINET
FES	FLARED END SECTION
FEXT	FIRE EXTINGUISHER
FF	FAR FACE or FACTORY FINISH or FLAT FACE
FFE	FINISH FLOOR ELEVATION
FG	FINISHED GRADE
FIG	FIGURE
FH	FIRE HYDRANT
FIN	FINISH
FJT	FLUSH JOINT
FL	FLOW or FLOW LINE
FLEX	FLEXIBLE
FLG	FLANGE
FLOR	FLUORESCENT
FLR	FLOOR
FLS	FLASHING or FLUSH
FO	FINISHED OPENING
FN	FENCE
FOB	FLAT ON BOTTOM
FOC	FACE OF CONCRETE or FACE OF CURB
FOF	FACE OF FINISH
FOM	FACE OF MASONRY
FOS	FACE OF STUDS
FOT	FLAT ON TOP
FPT	FEMALE PIPE THREAD
FR	FRAME
FRP	FIBERGLASS REINFORCED PLASTIC
FRTM	FIRE RETARDANT TREATED MATERIAL
FS	FLOOR SINK or FAR SIDE
FT	FEET or FOOT
FTG	FOOTING or FITTING
FUR	FURRED or FURRING
FURN	FURNITURE or FURNISH
FUT	FUTURE
FV	FACE VELOCITY
FW	FIELD WELD or FIRE WALL
FWD	FORWARD
FWE	FURNISHED WITH EQUIPMENT
FXTR	FIXTURE
G	GRILLE or GROUND or GENERAL (DWG DISCIPLINE)
GA	GAGE (METAL THICKNESS)
GAL	GALLON
GALV	GALVANIZED
GB	GRAB BAR or GRADE BREAK
GC	GROOVED COUPLING
GD	GUARD
GEN	GENERAL
GFCI	GROUND FAULT CIRCUIT INTERRUPTER
GFMU	GROUND FACE MASONRY UNIT
GG	GUTTER GRADE
GJ	GROOVED JOINT
GL	GLASS
GLB	GLASS BLOCK
GND	GROUND
GP	GUY POLE
GR	GRADE
GRTG	GRATING
GSB	GYPSUM SHEATHING BOARD
GT	GREASE TRAP
GVL	GRAVEL
GWB	GYPSUM WALLBOARD
GYP	GYPSUM HARDBOARD
H	HIGH
HB	HOSE BIB
HBD	HARDBOARD
HC	HANDICAPPED or HOLLOW CORE or HORIZONTAL CURVE
HC	HORIZONTAL CENTERLINE
HDR	HEADER
HDW	HARDWARE
HEX	HEXAGONAL
HGR	HANGER
HH	HANDHOLE
HID	HIGH INTENSITY DISCHARGE
HM	HOLLOW METAL
HORIZ	HORIZONTAL
HP	HIGH POINT or HORSEPOWER
HPC	HORIZONTAL POINT OF CURVATURE
HPS	HIGH PRESSURE SODIUM
HPT	HORIZONTAL POINT OF TANGENCY
HR	HOSE REEL or HOUR
HS	HEADED STUD or HIGH STRENGTH
HSS	HOLLOW STRUCTURAL SHAPE
HT	HEIGHT
HTG	HEATING
HV	HIGH VOLTAGE
HVAC	HEATING or VENTILATION & AIR CONDITIONING
HWD	HARDWOOD
HWL	HIGH WATER LEVEL
HYD	HYDRAULIC
HZ	HERTZ, CYCLES PER SECOND
I	INSTRUMENTATION (DWG DISCIPLINE)
ID	INSIDE DIAMETER or INTERIOR DIMENSION
IE	INVERT ELEVATION
IF	INSIDE FACE
IH	INTAKE HOOD
IMP	IMPACT
IN	INCH
INC	INCLUDE or INCANDESCENT
INF	INFLUENT
INSTR	INSTRUMENTATION
INSUL	INSULATION
INT	INTERIOR or INTERSECTION
INTR	INTERMEDIATE or INTERIOR
INV	INVERT
IPS	IRON PIPE SIZE
IPT	INTERNAL PIPE THREAD
IR	INSIDE RADIUS
IRR	IRRIGATION
ISO	ISOMETRIC
JB	JUNCTION BOX
JCT	JUNCTION
JF	JOINT FILLER
JST	JOIST
JT	JOINT
K	KIP
KB	KNEE BRACE
KCMIL	THOUSAND CIRCULAR MILS
KD	KNOCK DOWN
KO	KNOCK OUT
KSI	KIPS PER SQUARE INCH
L	ANGLE (SHAPE) or LENGTH or LAVATORY
LAD	LADDER
LAM	LAMINATE
LATL	LATERAL
LB	LAG BOLT or POUND
LCTB	LIQUID CHALK AND TACK BOARD
LDG	LANDING
LDR	LEADER
LE	LIFTING EYE
LEMJ	LARGE END MECHANICAL JOINT
LF	LINEAR FOOT
LG	LONG
LH	LEFT HAND
LIN	LINEAR
LIQ	LIQUID
LLH	LONG LEG HORIZONTAL
LLV	LONG LEG VERTICAL
LMLU	LIQUID MARKER LECTURE UNIT
LNG	LONGITUDINAL
LOC	LOCATION
LP	LOW POINT
LPS	LOW PRESSURE SODIUM
LR	LONG RADIUS
LT	LEFT
LTD	LIMITED
LTG	LIGHTING
LTL	LINTEL
LTNG	LIGHTNING
LV	LOW VOLTAGE
LVR	LOUVER
LW	LIGHTWEIGHT
LWC	LIGHTWEIGHT CONCRETE
LWL	LOW WATER LEVEL
M	MECHANICAL (DWG DISCIPLINE)
MA	MIXED AIR
MACH	MACHINED
MAINT	MAINTENANCE
MAN	MANUAL
MATL	MATERIAL
MAX	MAXIMUM
MB	MACHINE BOLT
MBR	MEMBER
MC	MECHANICAL COUPLING or MECHANICAL CONTRACTOR
MCB	METAL CORNER BEAD
MCJ	MASONRY CONTROL JOINT
MDMJ	MODIFIED DOUBLE MECHANICAL JOINT
MECH	MECHANICAL
MED	MEDIUM
MFR	MANUFACTURER
MH	MANHOLE or METAL HALIDE
MIN	MINIMUM
MIR	MIRROR
MISC	MISCELLANEOUS
MJ	MECHANICAL JOINT
MJ&PE	MECHANICAL JOINT AND PLAIN END
MLO	MAIN LUGS ONLY
MMB	MEMBRANE
MO	MASONRY OPENING
MOD	MODULAR or MODIFY
MON	MONUMENT
MPT	MALE PIPE THREAD
MRGWB	MOISTURE RESISTANT GYPSUM WALLBOARD
MS	MOP SINK
MSL	MEAN SEA LEVEL
MT	MOUNT
MU	MASONRY UNIT
MULL	MULLION
MV	MEDIUM VOLTAGE
MW	MONITORING WELL
N	NORTH or NEUTRAL
NA	NOT APPLICABLE
NAT	NATURAL
NC	NORMALLY CLOSED
NEG	NEGATIVE
NF	NEAR FACE or NON-FUSED
NIC	NOT IN CONTRACT
NO	NORMALLY OPEN or NUMBER
NOM	NOMINAL
NPS	NOMINAL PIPE SIZE
NPT	NATIONAL PIPE THREAD
NS	NEAR SIDE
NTS	NOT TO SCALE
NWL	NORMAL WATER LEVEL
O TO O	OUT-TO-OUT
OA	OUTSIDE AIR or OVERALL
OC	ON CENTER
OCPD	OVER CURRENT PROTECTION DEVICE
OD	OUTSIDE DIAMETER
OED	OPEN END DUCT
OF	OUTSIDE FACE or OFFICE FURNISHING
OG	ORIGINAL GROUND
OH	OVERHEAD
OPNG	OPENING
OPP	OPPOSITE
OPT	OPTIONAL
OR	OUTSIDE RADIUS
ORD	OVERFLOW ROOF DRAIN
ORIG	ORIGINAL
OVFL	OVERFLOW
OVHG	OVERHANG
OZ	OUNCE
P	PAINT or PROCESS (DWG DISCIPLINE)
PA	PUBLIC ADDRESS
PAR	PARALLEL or PARAPET
PB	PULL BOX or PANIC BAR
PBD	PARTICLE BOARD
PC	POINT OF CURVE or PIECE or PRECAST
PCC	POINT OF COMPOUND CURVATURE
PCF	POUNDS PER CUBIC FOOT
PCT	PERCENT
PE	PLAIN END
PED	PEDESTAL
PEN	PENETRATION
PERF	PERFORATED
PERM	PERMANENT
PERP	PERPENDICULAR
PF	POWER FACTOR
PFMU	PREFACED MASONRY UNIT
PH	PHASE
PI	POINT OF INTERSECTION
PKG	PACKAGE
PL	PLATE or PROPERTY LINE
PLAS	PLASTER
PLAT	PLATFORM
PLBG	PLUMBING
PLF	POUNDS PER LINEAR FOOT
PNEU	PNEUMATIC
POL	POLISH
POS	POSITIVE or POSITION
PP	POWER POLE or POLYPROPYLENE
PRC	POINT OF REVERSE CURVATURE
PREF	PREFINISHED
PREFAB	PREFABRICATED
PRELIM	PRELIMINARY
PREP	PREPARE
PRES	PRESSURE
PRI	PRIMARY
PROP	PROPERTY
PROT	PROTECTION
PS	PIPE SUPPORT
PSF	POUNDS PER SQUARE FOOT
PSI	POUNDS PER SQUARE INCH
PSIA	POUNDS PER SQUARE INCH ABSOLUTE
PSIG	POUNDS PER SQUARE INCH GAGE
PST	PRESTRESSED
PT	POINT or POINT OF TANGENCY
PTN	PARTITION
PVC	POLYVINYL CHLORIDE
PVMT	PAVEMENT
PWD	PLYWOOD
PWJ	PLYWOOD WEB JOIST
PZ	PIEZOMETER
Q	RATE OF FLOW
QT	QUARRY TILE
QTR	QUARTER
QTY	QUANTITY
QUAL	QUALITY
R&R	REMOVE AND REPLACE
R&S	REMOVE AND SALVAGE
R	RADIUS or REGISTER or RISER
RA	RETURN AIR
RB	RESILIENT BASE or ROCK BERM
RCPT	RECEPTACLE
RD	ROOF DRAIN
REC	RECESS
RECD	RECEIVED
RECT	RECTANGULAR
RED	REDUCER
REF	REFERENCE
REINF	REINFORCING
REM	REMOVE
REQD	REQUIRED
RESIL	RESILIENT
RET	RETAINING or RETURN
REV	REVISION or REVERSE
RF	RESILIENT FLOORING
RFG	ROOFING
RFL	REFLECTED or REFLECTOR
RGH	ROUGH
RGS	RIGID GALVANIZED STEEL
RGS—PVC	PVC COATED RGS
RH	RELIEF HOOD or RIGHT HAND or RELATIVE HUMIDITY
RL	REQUIRED LAP
RLFA	RELIEF AIR
RND	ROUND
RNG	RUNNING
RO	ROUGH OPENING
ROW	RIGHT OF WAY
RPM	REVOLUTIONS PER MINUTE
RR	RAILROAD
RSP	ROCK SLOPE PROTECTION
RT	RIGHT
RVT	RESILIENT VINYL TILE
RY	READY
S	SOUTH or SINK or STRUCTURAL (DWG DISCIPLINE)
SA	SUPPLY AIR
SAMU	SOUND ABSORBING MASONRY UNIT
SAN	SANITARY
SB	SPLASH BLOCK
SC	SOLID CORE
SCH	SCHEDULE
SCHEM	SCHEMATIC
SCN	SCREEN
SE	STEEL/ALUMINUM EDGE
SEC	SECONDARY or SECONDS
SECT	SECTION
SEMJ	SMALL END MECHANICAL JOINT
SEP	SEPARATE
SF	SQUARE FOOT
SG	SHEET GLASS or SEALANT GROOVE
SH	SHOWER
SHT	SHEET
SHTG	SHEATHING
SIL	SILENCE
SIM	SIMILAR
SL	SLOPE
SLTD	SLOTTED
SLV	SLEEVE
SMLS	SEAMLESS
SOG	SLAB ON GRADE
SP	SOUNDPROOF or STANDPIPE STRUCTURAL/PROCESS (DWG DISCIPLINE)
SPA	SPACING
SPEC	SPECIFICATION
SPLY	SUPPLY
SPST	SINGLE POLE, SINGLE THROW
SPT	SET POINT
SQ	SQUARE
SR	SHORT RADIUS
SS	SERVICE SINK
SST	STAINLESS STEEL
ST	STREET
STA	STATION
STD	STANDARD
STIF	STIFFENER
STIR	STIRRUP
STL	STEEL
STOR	STORAGE
STR	STRUCTURAL or STRAIGHT
SUB	SUBSTITUTE
SUC	SUCTION
SUSP	SUSPENDED
SY	SQUARE YARD
SYM	SYMBOL
SYMM	SYMMETRICAL
SYN	SYNTHETIC
SYS	SYSTEM
T&B	TOP AND BOTTOM
T&G	TONGUE AND GROOVE
T	TILE or TREAD
TA	TOILET ACCESSORY or TEMPERED AIR
TAN	TANGENT
TBM	TEMPORARY BENCHMARK
TCE	TEMPORARY CONSTRUCTION EASEMENT
TEF	TROWELED EPOXY FLOORING
TEMP	TEMPORARY or TEMPERATURE
THD	THREAD
THK	THICK
THRESH	THRESHOLD
THRU	THROUGH
TKBD	TACK BOARD
TOB	TOP OF BOLT or TOP OF BANK or TOP OF BEAM
TOC	TOP OF CURB or TOP OF CONCRETE
TOD	TOP OF DUCT
TOF	TOP OF FOOTING
TOG	TOP OF GRATING
TOL	TOLERANCE or TOP OF LEDGER
TOM	TOP OF MASONRY
TOP	TOP OF PLATE
TOPO	TOPOGRAPHY
TOS	TOP OF SLAB or TOP OF STEEL
TOW	TOP OF WALL
TP	TOILET PARTITION or TELEPHONE POLE or TOE PLATE or TRAP PRIMER
TPD	TOILET PAPER DISPENSER
TPG	TOPPING
TR	TRANSOM
TRANS	TRANSITION or TRANSVERSE
TRD	TRENCH DRAIN
TYP	TYPICAL
U	URINAL
UG	UNDERGROUND
ULT	ULTIMATE
UNFN	UNFINISHED
UNO	UNLESS NOTED OTHERWISE
UTIL	UTILITY
V	VENT or VELOCITY or VOLT
VA	VOLT AMPERE
VAC	VACUUM
VAR	VARNISH or VARIABLE or VOLT AMPERES REACTIVE
VB	VAPOR BARRIER or VINYL BASE or VALVE BOX
VC	VERTICAL CURVE
VCP	VENTILATION CONTROL PANEL
VCT	VINYL COMPOSITION TILE or VERTICAL CENTERLINE
VEL	VELOCITY
VENT	VENTILATION
VERT	VERTICAL
VG	VERTICAL GRAIN
VIF	VERIFY IN FIELD
VIN	VINYL
VS	VERSES or VAPOR SEAL
VOL	VOLUME
VPC	VERTICAL POINT OF CURVATURE
VPI	VERTICAL POINT OF INTERSECTION
VPT	VERTICAL POINT OF TANGENCY
VTR	VENT THROUGH ROOF
VWC	VINYL WALL COVERING
W/	WITH
W/O	WITHOUT
W	WATT or WEST or WIDE or WINDOW or WIRE or WIDE FLANGE BEAM
WB	WOOD BASE
WC	WATER CLOSET or WATER COLUMN
WD	WOOD or WIDTH
WF	WIDE FLANGE or WASH FOUNTAIN
WG	WIRE GLASS or WATER GAGE
WH	WALL HYDRANT or WEEP HOLE
WI	WROUGHT IRON
WL	WATER LEVEL
WLD	WELDED
WM	WIRE MESH
WP	WATERPROOF or WORKING POINT
WPCP	WATER POLLUTION CONTROL PLANT
WTHP	WEATHERPROOF
WS	WATERSTOP or WATER SURFACE
WSCT	WAINSCOT
WT	WEIGHT or WATER TIGHT
WWF	WELDED WIRE FABRIC
XFMR	TRANSFORMER
XP	EXPLOSION PROOF
XS	EXTRA STRONG
XXS	DOUBLE EXTRA STRONG
XSECT	CROSS SECTION
YH	YARD HYDRANT
YS	YIELD STRENGTH

GENERAL NOTES:

1. THESE ABBREVIATIONS APPLY TO THE ENTIRE SET OF CONTRACT DRAWINGS.
2. LISTING OF ABBREVIATIONS DOES NOT IMPLY ALL ABBREVIATIONS ARE USED IN THE CONTRACT DRAWINGS.
3. ABBREVIATIONS SHOWN ON THIS DRAWING INCLUDE VARIATIONS OF THE WORD, FOR EXAMPLE, "MOD" MAY MEAN MODIFY OR MODIFICATION; "INC" MAY MEAN INCLUDED OR INCLUDING; "REINF" MAY MEAN EITHER REINFORCE OR REINFORCING.
4. SCREENING OR SHADING OF WORK IS USED TO INDICATE EXISTING COMPONENTS OR TO DE-EMPHASIZE PROPOSED IMPROVEMENTS TO HIGHLIGHT SELECTED TRADE WORK. REFER TO CONTEXT OF EACH DRAWING FOR USAGE.
5. SEE PROJECT EQUIPMENT AND PIPING SYSTEMS DRAWING FOR SYMBOLS AND ABBREVIATIONS SPECIFIC TO THE PROJECT.

FILE: 215786-000003.dwg
DATE: Oct 06, 2015 - 10:18:49am, ranider

HDR Engineering, Inc.

ISSUE	DATE	DESCRIPTION
A	JUNE 2015	ISSUED FOR BID

PROJECT MANAGER	C. OLSON
DESIGNED	R. NATOLI
DESIGNED	
CHECKED	C. OLSON
DRAWN	B. DOWN
DATE	JUNE 30, 2015
PROJECT NUMBER	~~215786~~

REGISTERED PROFESSIONAL ENGINEER — CRAIG A. OLSON — NO. 39819 EXP. 12/31/15 — CIVIL — STATE OF CALIFORNIA — 06-30-15

CITY OF PINOLE CALIFORNIA 1903

PINOLE/HERCULES WATER POLLUTION CONTROL PLANT UPGRADE
CLIENT PN

GENERAL

ABBREVIATIONS

0 1" 2"

FILENAME	0,0
SCALE	NONE

SHEET **00G003**

GENERAL

- EXISTING EQUIPMENT OR MATERIALS TO BE REMOVED (SCREENED)
- TO BE BUILT FOR FUTURE REMOVAL
- NEW FACILITIES (SOLID)
- EXISTING (SCREENED)
- PROPERTY LINE
- PHANTOM LINE OR MATCH LINE
- CENTERLINE
- HIDDEN LINE OR FUTURE IMPROVEMENTS
- WATER SURFACE

- & OR $ — AND
- ∠ OR L — ANGLE
- ℄ — CENTER LINE
- ℙ OR PL — PLATE OR PROPERTY LINE
- (2) OR ⟨2⟩ — KEYNOTE
- @ — AT
- (E) — EXISTING
- (N) — NEW

CIVIL

- NATURAL GROUND OR GRADE
- GRANULAR MATERIAL SUCH AS CRUSHED ROCK OR GRAVEL
- PAVEMENT IN PLAN (TYPE AS NOTED)
- AC PAVEMENT IN SECTION
- LIME TREATED SUBGRADE
- FENCE
- 110 — EXISTING GRADE CONTOURS (OR SCREENED)
- 110 — FINISH GRADE CONTOURS
- x 120.0 — EXISTING SPOT ELEVATION (OR SCREENED)
- 110.50 x — FINISH GRADE SPOT ELEVATION
- 112.50 / 112.00 — TOP OF CURB ELEVATION / GUTTER/FLOWLINE ELEVATION
- SWALE OR DEPRESSION

- EDGE OF WATER; FLOWLINE WITH DIRECTIONAL ARROW
- 3:1 — SLOPE (3 HOR TO 1 VERT)
- CUT OR FILL SLOPE; ARROWS POINT DOWN SLOPE
- TREES, SHRUBS OR HEDGE
- P9 — SURVEY CONTROL POINT,
- HYDRANT
- MH — MANHOLE
- CB — CATCH BASIN OR INLET
- UTILITY POLE
- SURVEY MONUMENT
- RETAINING WALL

ARCHITECTURAL / STRUCTURAL

- CONCRETE
- REINFORCEMENT IN SECTION
- PRECAST CONCRETE
- MORTAR, GROUT OR PLASTER
- CONCRETE BLOCK
- BRICK OR CAST IRON
- GRATING SPAN
- CHECKER PLATE
- STEEL OR STAINLESS STEEL
- ALUMINUM
- WOOD
- RIGID INSULATION
- BATT INSULATION

- NEOPRENE, RUBBER OR PLASTIC
- OPENING OR DEPRESSION IN SLAB OR WALL
- OPENING WITH GRATING COVER
- OPENING WITH CHECKER PLATE COVER
- METAL STUD WITH LATH AND PLASTER PARTITION
- JOINT FILLER
- WATER STOP
- GUARDRAIL TYPE "A" (PUBLIC ACCESS)
- GUARDRAIL TYPE "B"
- 2 — SLIDE GATE OPENING AND DESIGNATION (PLAN)
- 21 — NOTE REFERENCE NUMBER
- F — FIRE EXTINGUISHER
- HOISTING HOOK

VALVES

- THREE WAY VALVE
- GATE VALVE (NORMALLY OPEN)
- GATE VALVE (NORMALLY CLOSED)
- PLUG VALVE (NORMALLY OPEN)
- PLUG VALVE (NORMALLY CLOSED)
- BALL VALVE (NORMALLY OPEN)
- BALL VALVE (NORMALLY CLOSED)
- BUTTERFLY VALVE
- GLOBE VALVE (NORMALLY OPEN)
- GLOBE VALVE (NORMALLY CLOSED)
- DIAPHRAGM VALVE (NORMALLY OPEN)
- DIAPHRAGM VALVE (NORMALLY CLOSED)
- DIAPHRAGM VALVE (MECHANICAL SHEETS)
- ANGLE VALVE
- FLOAT VALVE
- PINCH VALVE
- NEEDLE VALVE
- DOUBLE LEAF CHECK VALVE
- IN-LINE, SPRING LOADED RELIEF VALVE

- SWING CHECK VALVE
- BALL CHECK VALVE
- PUMP DISCHARGE VALVE
- GAUGE OR ROOT VALVE
- KNIFE GATE VALVE
- FLAP GATE
- BALANCING COCK
- CIRCUIT SETTER
- THERMOSTATICALLY CONTROLLED VALVE
- PRESSURE AND VACUUM RELIEF VALVE
- VACUUM RELIEF VALVE
- PRESSURE RELIEF VALVE
- BACK PRESSURE REGULATING VALVE
- MUD VALVE
- PRESSURE REGULATING VALVE

ACTUATORS

- MOP — MOTOR OPERATED VALVE
- S / XX — SOLENOID VALVE
- XX — DIAPHRAGM OPERATED VALVE
- S / XX — PISTON OPERATED VALVE

XX	FAIL POSITION
FO	FAIL OPEN
FC	FAIL CLOSED
FLP	FAILED LAST POSITION

MECHANICAL

PIPE & FITTINGS

SINGLE LINE	DOUBLE LINE		SINGLE LINE	DOUBLE LINE	
		FLANGED JOINT			ELASTOMER AND FABRIC EXPANSION JOINT
		PLAIN OR GROOVED END MECHANICAL COUPLING			EXPANSION JOINT (SEE SPECS FOR TYPE)
		PUSH ON, MECHANICAL OR BALL AND SOCKET JOINT			FLEXIBLE METAL HOSE
		WELDED JOINT			ELBOW UP
		SLEEVE TYPE MECHANICAL COUPLING			ELBOW DOWN
		RESTRAINED SLEEVE TYPE MECHANICAL COUPLING			TEE UP
		FLANGED COUPLING ADAPTER			TEE DOWN
		RESTRAINED FLANGED COUPLING ADAPTER			LATERAL UP
		UNION			LATERAL DOWN
					CONCENTRIC REDUCER
					ECCENTRIC REDUCER

MISCELLANEOUS DEVICES

- A — UTILITY STATION (LETTER, IF ANY, DESIGNATES TYPE), SEE 'M' SHEET FOR DETAILS
- HOSE RACK
- FLOOR DRAIN
- EQUIPMENT DRAIN
- VERTICAL DRAIN
- VENT

- XCO — CLEANOUT; X=DESIGNATION IF ANY
- PIPE ANCHOR
- PIPE GUIDE
- ROTAMETER

GENERAL NOTES

1. THIS SHEET IS GENERAL IN NATURE. SOME SYMBOLS SHOWN HEREON MAY NOT BE USED ON THE CONTRACT PLANS.
2. SEE SHEET 00G003 FOR ABBREVIATIONS.
3. SEE SHEETS 00G005 AND 00G006 FOR EQUIPMENT AND PIPING SYSTEMS DESIGNATIONS.
4. SEE SHEETS 00E001 AND 00I001 FOR ADDITIONAL SYMBOLS.
5. SYMBOLS ARE ARRANGED ON SPECIFIC SHEETS AND IN CATEGORIES FOR CONVENIENCE ONLY; SYMBOLS MAY BE USED ON ANY OF THE CONTRACT SHEETS.
6. SCREENING OR SHADING OF LINEWORK IS USED TO INDICATE EXISTING COMPONENTS OR TO DEEMPHASIZE PROPOSED IMPROVEMENTS TO HIGHLIGHT SELECTED TRADE WORK, REFER TO CONTEXT OF EACH SHEET FOR USEAGE.

FILE: 215786-000004.dwg
DATE: Oct 06, 2015 - 10:18:49am, ranider

HDR Engineering, Inc.

ISSUE	DATE	DESCRIPTION
A	JUNE 2015	ISSUED FOR BID

PROJECT MANAGER	C. OLSON
DESIGNED	R. NATOLI
DESIGNED	
CHECKED	C. OLSON
DRAWN	B. DOWN
DATE	JUNE 30, 2015
PROJECT NUMBER	215786

REGISTERED PROFESSIONAL ENGINEER — CRAIG A. OLSON — NO. 39819 — EXP. 12/31/15 — CIVIL — STATE OF CALIFORNIA — 06-30-15

CITY OF PINOLE CALIFORNIA 1903

PINOLE/HERCULES
WATER POLLUTION
CONTROL PLANT UPGRADE
CLIENT PN

GENERAL

LEGEND AND SYMBOLS

0 1" 2"

FILENAME	215786-00G004
SCALE	NONE

SHEET 00G004

DESIGNATIONS

PROCESS AREA SUBDIVISION DESIGNATIONS

PROCESS AREA CODE NUMBER	AREA/ROOM SUBDIVISION CODE NUMBER	PLANT DESCRIPTION	SHEET NUMBER	EQUIPMENT NUMBER
0		GENERAL		
	0	GENERAL		
	1	SITE STRUCTURES AND EQUIPMENT		
	2	SITE GRADING AND PAVING		
	3	SITE PIPING		
	4	LANDSCAPE		
	5	CATHODIC PROTECTION		
	6	OUTFALL PIPELINE		
1		HEADWORKS		
	0	GENERAL		
	1	INLET FLOW MEASUREMENT		
	2	SCREENING/PUMPING AREA		
	3	GRIT AREA		
	4	ELECTRICAL BUILDING/GENERATOR		
	5	ODOR CONTROL		
2		PRIMARY CLARIFIERS		
	0	GENERAL		
	1	PRIMARY CLARIFIERS		
	2	PRIMARY INFLUENT DISTRIBUTION		
	3	PRIMARY SCUM PUMPING		
	4			
	5	PRIMARY SLUDGE PUMPING		
3		AERATION BASINS		
	0	GENERAL		
	1	AERATION BASINS		
	2	PRIMARY EFFLUENT AND MIXED LIQUOR SPLITTER BOX		
	3			
	4			
	5			
4		SECONDARY CLARIFIERS		
	0	GENERAL		
	1	SECONDARY CLARIFIERS		
	2	RAS PUMPING		
	3	WAS PUMPING		
	4			
	5			
5		BLOWER BUILDING		
	0	GENERAL		
	1	BLOWER ROOM		
	2			
	3			
	4			
	5			
6		SOLIDS HANDLING		
	0	GENERAL		
	1	SOLIDS THICKENING AND BLENDING		
	2	SOLIDS DEWATERING		
	3	ODOR CONTROL		
	4	GRAVITY SLUDGE THICKENER		
	5	POLYMER		
	6	MAINTENANCE SHOP		
7		DISINFECTION		
	0	GENERAL		
	1	CHLORINE CONTACT BASIN		
	2	3W SYSTEM		
	3	EMERGENCY OUTFALL STRUCTURE		
	4			
	5	HYPOCHLORITE/BISUFITE STORAGE		
	6	FERRIC CHLORIDE STORAGE		
	7	SODIUM HYDROXIDE STORAGE		
8		DIGESTERS		
	0	GENERAL		
	1	DIGESTERS		
	2	DIGESTER CONTROL BUILDING		
	3			
	4			
	5	WASTE GAS BURNER		
9		EFFLUENT PUMPING		
	0	GENERAL		
	1	PUMP STATION		
	2	SURGE TANK		
	3			
	4			
	5			

SHEET & PROCESS AREA DESIGNATION SYSTEMS

SHEETS ARE SUBDIVIDED BY DISCIPLINE AS FOLLOWS:

- G – GENERAL
- D – DEMOLITION
- C – CIVIL
- L – LANDSCAPE
- A – ARCHITECTURAL
- S – STRUCTURAL
- P – PROCESS
- M – MECHANICAL
- E – ELECTRICAL
- I – INSTRUMENTATION

EQUIPMENT

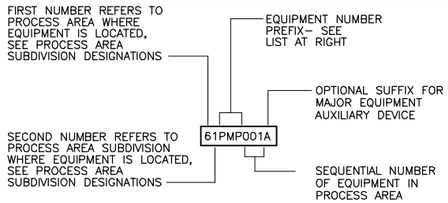

ROOM NUMBERING DESIGNATIONS

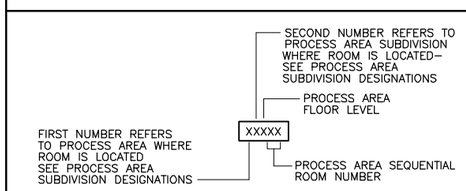

DOOR NUMBERING DESIGNATIONS

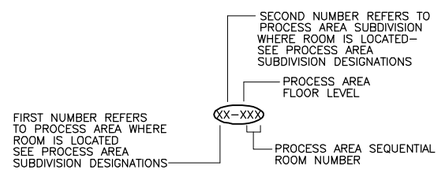

WALL/WINDOW TYPES

WALL TYPES AND WINDOW TYPES ARE IDENTIFIED AS:



EQUIPMENT NUMBER PREFIXES

A	AERATOR
ABI	AERATION BASIN INFLUENT
ACC	AIR CONDITIONING COIL
ACU	AIR CONDITIONING UNIT
AD	AIR DRYER
AF	AIR FILTER
AFD	ADJUSTABLE FREQUENCY DRIVE
AHC	AIR HANDLING UNIT WITH COIL
AHU	AIR HANDLING UNIT
ANA	ANALYZER
ASC	ADJUSTABLE SPEED CONTROLLER
ASD	ADJUSTABLE SPEED DRIVE
ATS	AUTOMATIC TRANSFER SWITCH
B	BLOWER
BF	BLIND FLANGE
BFP	BACKFLOW PREVENTER
BFU	BOILER FEEDWATER UNIT
BFV	BUTTERFLY VALVE
BG	BUTTERFLY GATE
BLR	BOILER
BNR	BURNER
BOX	HVAC BOX
BPV	BACK PRESSURE VALVE
BSC	BAR SCREEN
C	CLARIFIER/COIL
CAP	CAPACITOR
CAV	CONSTANT AIR VOLUME TERMINAL UNIT
CC	COOLING COIL
CDR	CONDENSER
CDU	CONDENSING UNIT
CFR	CHEMICAL FEEDER
CG	CENTRIFUGE
CHL	CHLORINATOR
CI	HYPOCHLORILE INDUCTION UNIT
CMP	COMPRESSOR
CPT	COMPACTOR
CPU	COMPUTER
CRN	CRANE
CRU	CONDENSATE RETURN UNIT
CV	CONTROL VALVE/CHECK VALVE
CVR	CONVEYOR
CY	CYCLONE
CYL	CYLINDER
DA	DEAERATOR
DAF	DISSOLVED AIR FLOTATION
DF	DRINKING FOUNTAIN
DHU	DEHUMIDIFIER
DIG	DIGESTER
DIS	DISTRIBUTOR
DPP	DIAPHRAGM PUMP
DPR	DAMPER
DRG	DREDGE
DS	DISCONNECT SWITCH
DSP	DOUBLE SUCTION PUMP
DT	DRIP TRAP
DU	DRIVE UNIT
DX	DIRECT EXPANSION COIL
EB	ENGINE–BLOWER MODULE
EC	EVAPORATIVE COOLER
EFP	EFFLUENT PUMP
EG	ENGINE–GENERATOR MODULE
ENG	ENGINE
EPR	EVAPORATOR
ESP	END SUCTION PUMP
F	FAN
FCS	FILTER SCREEN
FCU	FAN COIL UNIT
FCV	FLOW CONTROL VALVE
FE	FLOW ELEMENT
FG	FLAP GATE
FLC	FLOCCULATOR
FLT	FILTER
FP	FILTER PRESS
FPU	FLUID POWER UNIT
FUR	FURNACE
FV	FLOW CONTROLLED VALVE
GDR	GRINDER
GEN	GENERATOR
GRC	GRIT CLASSIFIER
GRP	GEAR PUMP
GST	GRAVITY SLUDGE THICKENER
GTR	GRIT REMOVER
GV	GRAVITY VENTILATOR
HC	HEATING COIL
HEX	HEAT EXCHANGER
HOP	HYDRAULIC OPERATOR
HP	HEAT PUMP
HS	HAND SWITCH
HST	HOIST
HTR	HEATER
HTT	HEAT TRACE TAPE
HUM	HUMIDIFIER
HV	HAND VALVE
IMC	INDIVIDUAL MOTOR CONTROLLER
INJ	INJECTOR
JB	JUNCTION BOX
KV	TIME (K) CONTROLLED VALVE
LAB	LABORATORY EQUIPMENT
LBK	LOADBANK
LCV	LEVEL CONTROL VALVE
LV	LEVEL CONTROLLED VALVE (NON SELF–ACTING)
LVR	LOUVER
M	MOTOR
MCC	MOTOR CONTROL CENTER
MEE	MISCELLANEOUS ELECTRICAL EQUIPMENT
MH	MANHOLE
MIE	MISCELLANEOUS INSTRUMENTATION EQUIPMENT
MME	MISCELLANEOUS MECHANICAL EQUIPMENT
MOP	MOTOR OPERATOR
MS	MOISTURE SEPARATOR
MSN	MECHANICAL SCREEN
MTS	MANUAL TRANSFER SWITCH
MUX	MULTIPLEXER
MVO	MOTOR VALVE OPERATOR
MVS	MEDIUM VOLTAGE SWITCH
MX	MIXER
MZU	MULTIZONE UNIT
OCU	ODOR CONTROL UNIT
ORF	ODOR REMOVAL FILTER
ORT	ODOR REDUCTION TOWER
ORU	ODOR REDUCTION UNIT
PB	PULL BOX
PBU	POLYMER BLEND UNIT
PBD	PANELBOARD
PCP	PROGRESSING CAVITY PUMP
PCV	PRESSURE CONTROL VALVE
PDCV	PRESSURE DIFFERENTIAL CONTROL VALVE
PEJ	PNEUMATIC EJECTOR
PLC	PROGRAMMABLE LOGIC CONTROLLER
PMP	PUMP
PNL	PANEL
POP	PNEUMATIC OPERATOR
PPS	PERFORATED PLATE SCREEN
PRV	PRESSURE REDUCING VALVE
PSC	SCREW PUMP
PSV	PRESSURE SAFETY VALVE
PVL	PRESSURE VESSEL
RDT	ROTARY DRUM THICKENER
REC	RECEIVER
SBP	SUBMERSIBLE PUMP
SCL	SCALE
SCN	SCREEN
SCR	SCRUBBER
SEP	SEPARATOR
SG	SLUICE GATE
SKM	SKIMMER
SLC	SLUDGE COLLECTOR
SLG	SLIDE GATE
SLR	SILENCER
SMP	SAMPLER
ST	SURGE TANK
STP	SOUND TRAP
STR	STRAINER
SUB	SUBSTATION
SV	SOLENOID VALVE
SWBD	SWITCHBOARD
SWGR	SWITCHGEAR
T	TANK/TRERMOSTAT
TB	TERMINAL BOX
TBN	TURBINE
TBP	TURBINE PUMP
TCV	TEMPERATURE CONTROL VALVE
TEL	TELEPHONE EQUIPMENT
TFR	TRANSFORMER
TM	TIMER
TRS	TRANSFER SWITCH
UH	UNIT HEATER
US	UTILITY STATION
UV	MULTI–VARIABLE (U) CONTROLLED VALVE
VAL	VALVE
VAP	VACUUM PUMP
VAV	VARIABLE AIR VOLUME TERMINAL UNIT
VEN	VENTILATOR
VFC	VARIABLE FREQUENCY CONTROLLER
VFD	VARIABLE FREQUENCY DRIVE
VGR	VORTEX GRIT REMOVAL
VIB	VIBRATOR
VSC	VARIABLE SPEED CONTROLLER
VSD	VARIABLE SPEED DRIVE
VTP	VORTEX PUMP
WC	WASHER COMPACTOR
XXX	GENERAL
YV	EVENT (Y) CONTROLLED VALVE

NOTES

1. SHEET 00G005 IS GENERAL IN NATURE. SOME DESIGNATIONS SHOWN HEREIN MAY NOT BE USED ON THESE CONTRACT PLANS.
2. SEE SHEET 00G003 FOR GENERAL ABBREVIATIONS.
3. EXISTING PIPING IS DESIGNATED BY SERVICE WITHOUT IMPLICATION AS TO PIPING MATERIAL. EXISTING PIPING MATERIAL, IF KNOWN, IS INDICATED SEPARATELY, AND MAY NOT BE THE SAME MATERIAL AS SPECIFIED FOR NEW PIPING FOR THE SAME SERVICE.
4. VALVE DESIGNATIONS APPLY TO MANUALLY OPERATED VALVES AND CHECK VALVES AND ARE NOT NECESSARILY USED FOR ALL SIZES.
5. EQUIPMENT NUMBER PREFIXES ARE FOR REFERENCE ONLY. NOT ALL EQUIPMENT NUMBER PREFIXES ARE USED IN THESE CONTRACT PLANS.

FILE: 215786-00G005.dwg
DATE: Oct 06, 2015 - 10:18:49am, ranider

HDR Engineering, Inc.

ISSUE	DATE	DESCRIPTION
A	JUNE 2015	ISSUED FOR BID

PROJECT MANAGER	C. OLSON
DESIGNED	R. NATOLI
DESIGNED	
CHECKED	C. OLSON
DRAWN	B.DOWN
DATE	JUNE 30, 2015
PROJECT NUMBER	215786

REGISTERED PROFESSIONAL ENGINEER
CRAIG A. OLSON
NO. 39819
EXP. 12/31/15
CIVIL
STATE OF CALIFORNIA
06-30-15

CITY OF PINOLE CALIFORNIA 1903

PINOLE/HERCULES
WATER POLLUTION
CONTROL PLANT UPGRADE
CLIENT PN

GENERAL

DESIGNATION SYSTEM

0 1" 2"

FILENAME	215786-00G005
SCALE	NONE

SHEET **00G005**

PIPING SYSTEMS SCHEDULE AND ABBREVIATIONS

ABBREV	SERVICE
1W	NO 1 WATER
2W	NO 2 WATER
3W	NO 3 WATER (CHLORINATED EFFLUENT)
4W	NO 4 WATER (DECHLORINATED EFFLUENT)
AA	AERATION AIR
ABI	AERATION BASIN INFLUENT
CEN	CENTRATE
D	DRAIN
DS	DIGESTED SLUDGE
FA	FOUL AIR
FCL	FERRIC CHLORIDE
FE	FINAL EFFLUENT
GR	GRIT
GRO	GRIT OVERFLOW
GTO	GRAVITY THICKENER OVERFLOW
GTSL	GRAVITY THICKENED SLUDGE
HPA	HIGH PRESSURE AIR
IS	INFLUENT SEWER
LPA	LOW PRESSURE AIR
LSG	LOW PRESSURE SLUDGE GAS
ML	MIXED LIQUOR
NG	NATURAL GAS
OF	OVERFLOW
PB	PRIMARY BYPASS
PD	PLANT DRAIN
PE	PRIMARY EFFLUENT
PI	PRIMARY INFLUENT
POLY	POLYMER (SOLUTION)
PSC	PRIMARY SCUM
PSL	PRIMARY SLUDGE
RAS	RETURN ACTIVATED SLUDGE
RS	RAW SEWAGE
SAM	SAMPLE
SBS	SODIUM BISULFITE
SC	SCUM
SE	SECONDARY EFFLUENT
SHC	SODIUM HYPOCHLORITE
SHO	SODIUM HYDROXIDE
SS	SANITARY SEWER
STD	STORM DRAIN
SW	SEAL WATER
TS	THICKENED SLUDGE
TSC	THICKENER SCUM
V	VENT
VTR	VENT THROUGH ROOF
WAS	WASTE ACTIVATED SLUDGE

SERVICE	
B	BURIED
C	CONCRETE ENCASED
E	EXPOSED
S	SUBMERGED

PIPE MATERIAL TYPE ABBREVIATION	
BS	BLACK STEEL
CISP	CASIT IRON SOIL PIPE
CML/C	CEMENT MORTAR LINED & COATED
CMP	CORRUGATED METAL PIPE
CU	COPPER (TUBING)
DI	DUCTILE IRON
FS	FABRICATED STEEL
FRP	FIBERGLASS REINFORCED PLASTIC
GS	GALVANIZED STEEL
PE	POLYETHYLENE
PVC	POLYVINYL CHLORIDE
RB	RED BRASS
RCP	REINFORCED CONCRETE PIPE
SST	STAINLESS STEEL
WS	WELDED STEEL

IDENTIFICATION SYMBOLOGY

PIPING

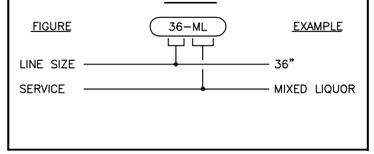

NOTE: SEE SPECIFICATION SECTION 15060 FOR PIPING SYSTEM MATERIALS.

FILE: 215786-000006.dwg
DATE: Oct 06, 2015-10:18:49am, rsnider

HDR Engineering, Inc.

ISSUE	DATE	DESCRIPTION
A	JUNE 2015	ISSUED FOR BID

PROJECT MANAGER	C. OLSON
DESIGNED	R. NATOLI
DESIGNED	
CHECKED	C. OLSON
DRAWN	B. DOWN
DATE	JUNE 30, 2015
PROJECT NUMBER	~~215786~~

REGISTERED PROFESSIONAL ENGINEER
CRAIG A. OLSON
NO. 39819
EXP. 12/31/15
CIVIL
STATE OF CALIFORNIA
06-30-15

CITY OF PINOLE CALIFORNIA 1903

PINOLE/HERCULES
WATER POLLUTION
CONTROL PLANT UPGRADE
CLIENT PN

GENERAL

PIPING SYSTEMS SCHEDULE AND ABBREVIATIONS

0 1" 2"

FILENAME	215786-00G006
SCALE	NONE

SHEET **00G006**

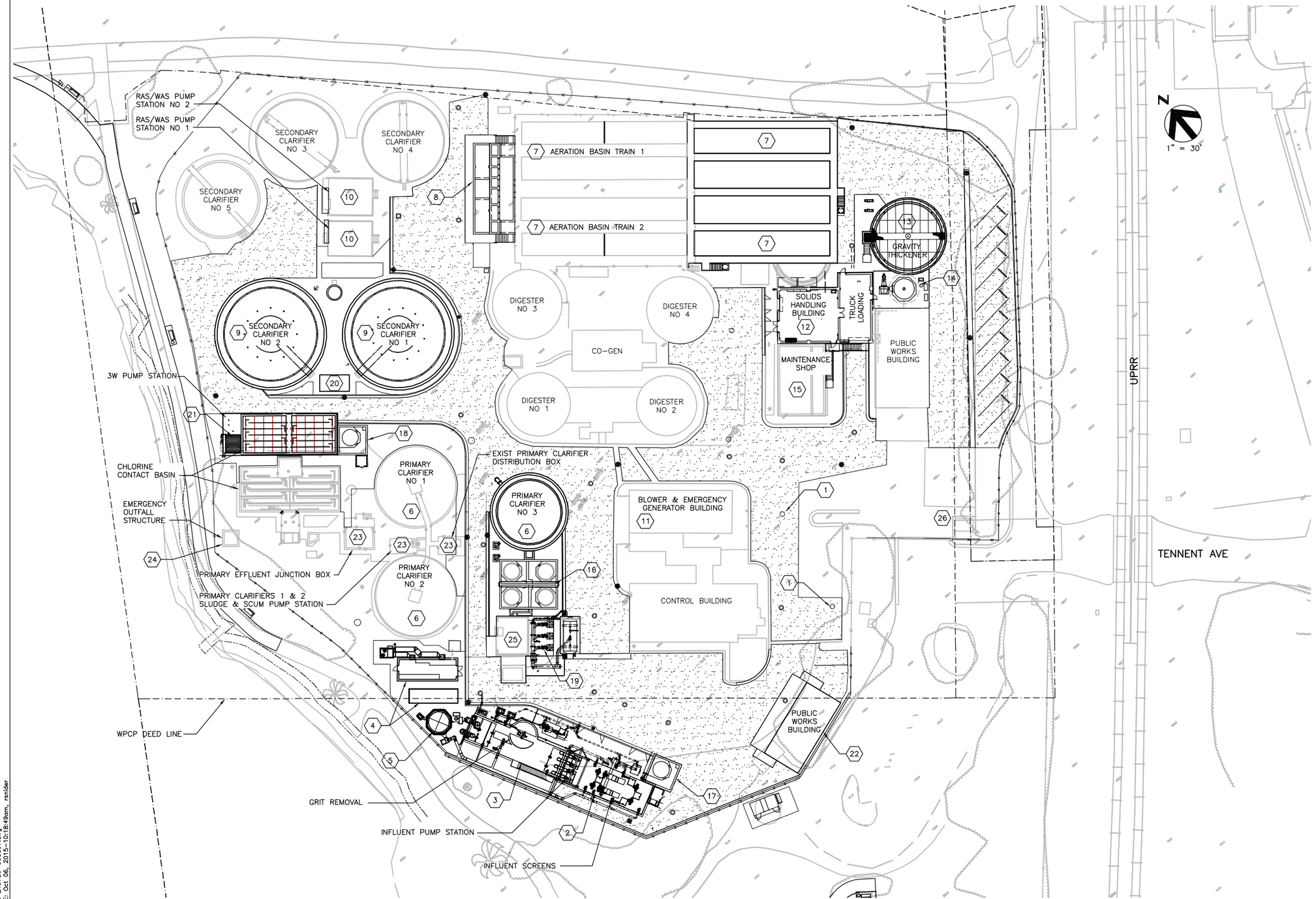

KEY NOTES:

1. INFUENT FLOW MEASURMENT 1100 SERIES
2. HEADWORKS 1200 SERIES
3. GRIT REMOVAL 1300 SERIES
4. ELECTRICAL BUILDING/GENERATOR 1400 SERIES
5. ODOR CONTROL, HEADWORKS 1500 SERIES
6. PRIMARY CLARIFIERS 2100 SERIES
7. AERATION BASINS 3100 SERIES
8. PRIMARY EFFLUENT AND MIXED LIQUOR FLOW SPLIT BOX – 3200 SERIES
9. SECONDARY CLARIFIERS 4100 SERIES
10. RAS/WAS PUMP STATIONS 1 & 2 4200 SERIES
11. BLOWER & EMERGENCY GENERATOR BUILDING 5100 SERIES
12. SOLIDS HANDLING BUILDING 6100 & 6200 SERIES
13. GRAVITY SOLIDS THICKENER 6400 SERIES
14. ODOR CONTROL, SOLIDS HANDLING 6300 SERIES
15. MAINTENANCE SHOP 6600 SERIES
16. SODIUM HYPOCHLORITE/BISULFITE CHEMICAL STORAGE – 7500 SERIES
17. FERRIC CHLORIDE CHEMICAL STORAGE AND FEED– 7600 SERIES
18. SODIUM HYDROXIDE CHEMICAL STORAGE AND FEED – 7700 SERIES
19. EFFLUENT PUMPING STATION 9100 SERIES
20. DIGESTER GAS BURNER 8500 SERIES
21. CHLORINE CONTACT BASIN 7100 SERIES
22. PUBLIC WORKS BUILDING 0100 SERIES
23. PRIMARY FLOW DISTRIBUTION 2200 SERIES
24. EMERGENCY OUTFALL STRUCTURE 7300 SERIES
25. CHEMICAL FEED/EMERGENCY GENERATOR BUILDING – 9100 SERIES
26. FUEL DISPERSING STATION

FILE: 215786-000007.dwg
DATE: Oct 06, 2015 - 10:18:49am, ranider

HDR Engineering, Inc.

ISSUE	DATE	DESCRIPTION
A	JUNE-2015	ISSUED FOR BID

PROJECT MANAGER	C. OLSON
DESIGNED	R. NATOLI
DESIGNED	
CHECKED	C. OLSON
DRAWN	B. DOWN
DATE	JUNE 30, 2015
PROJECT NUMBER	215786

REGISTERED PROFESSIONAL ENGINEER
CRAIG A. OLSON
NO. 39819
EXP. 12/31/15
CIVIL
STATE OF CALIFORNIA
06-30-15

CITY OF PINOLE CALIFORNIA 1903

PINOLE/HERCULES
WATER POLLUTION
CONTROL PLANT UPGRADE
CLIENT PN

GENERAL

OVERALL SITE KEY PLAN

0 1" 2"

FILENAME	215786-00G007
SCALE	AS NOTED

SHEET **00G007**

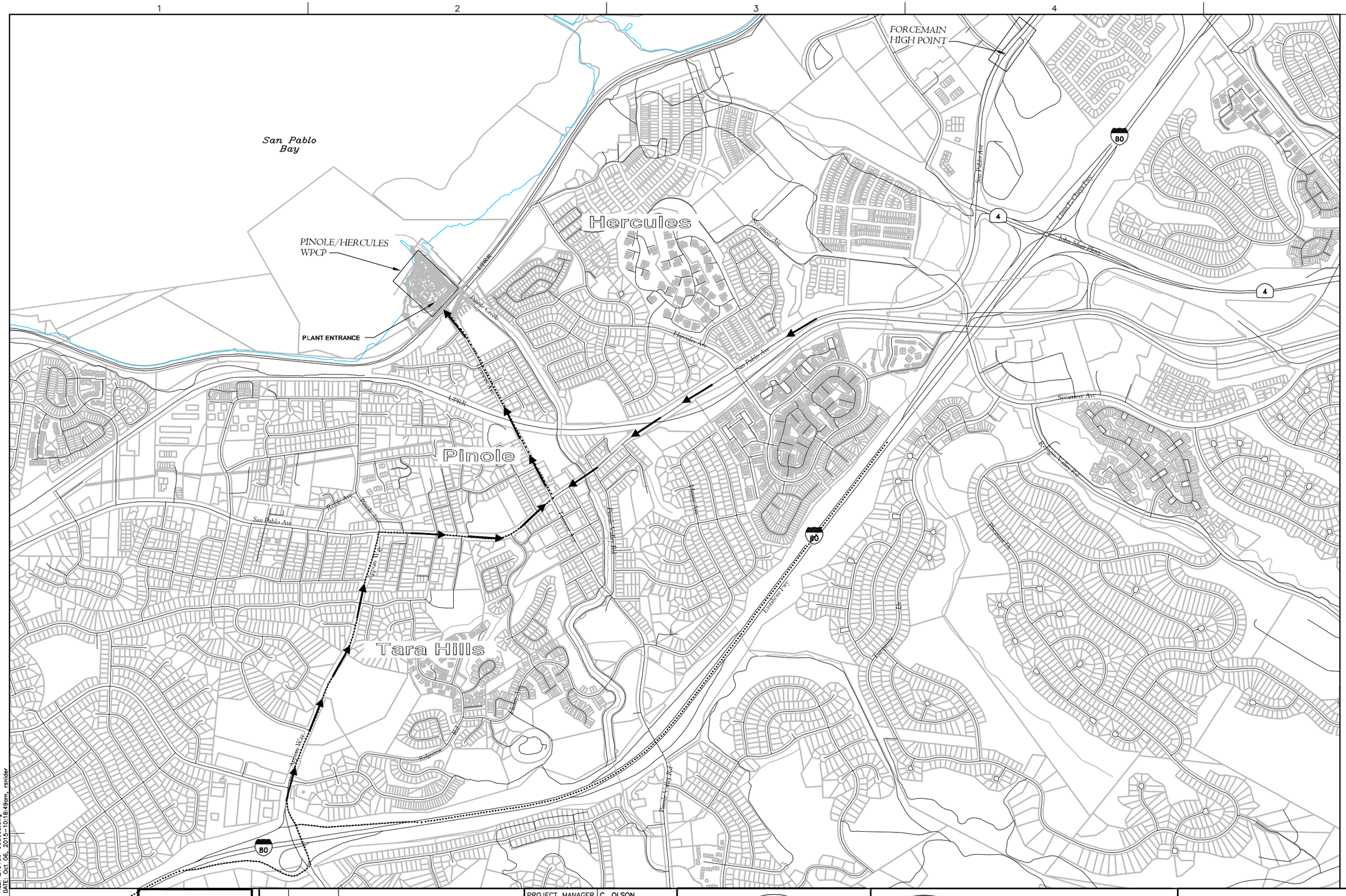

NOTES:

1. NO CONSTRUCTION ACCESS ALLOWED ON PINOLE VALLEY ROAD.

FILE: 215786-000008.dwg
DATE: Oct 06, 2015-10:18:49am, ranider

HDR Engineering, Inc.

ISSUE	DATE	DESCRIPTION
A	JUNE-2015	ISSUED FOR BID

PROJECT MANAGER	C. OLSON
DESIGNED	R. NATOLI
DESIGNED	
CHECKED	C.OLSON
DRAWN	B. DOWN
DATE	JUNE 30, 2015
PROJECT NUMBER	215786

REGISTERED PROFESSIONAL ENGINEER
CRAIG A. OLSON
NO. 39819
EXP. 12/31/15
CIVIL
STATE OF CALIFORNIA
04-30-15

CITY OF PINOLE CALIFORNIA 1903

PINOLE/HERCULES
WATER POLLUTION
CONTROL PLANT UPGRADE
CLIENT PN

GENERAL

CONTRACTOR AND TRUCK SITE ACCESS

0 1" 2"

FILENAME	215786-00G008
SCALE	AS NOTED

SHEET **00G008**

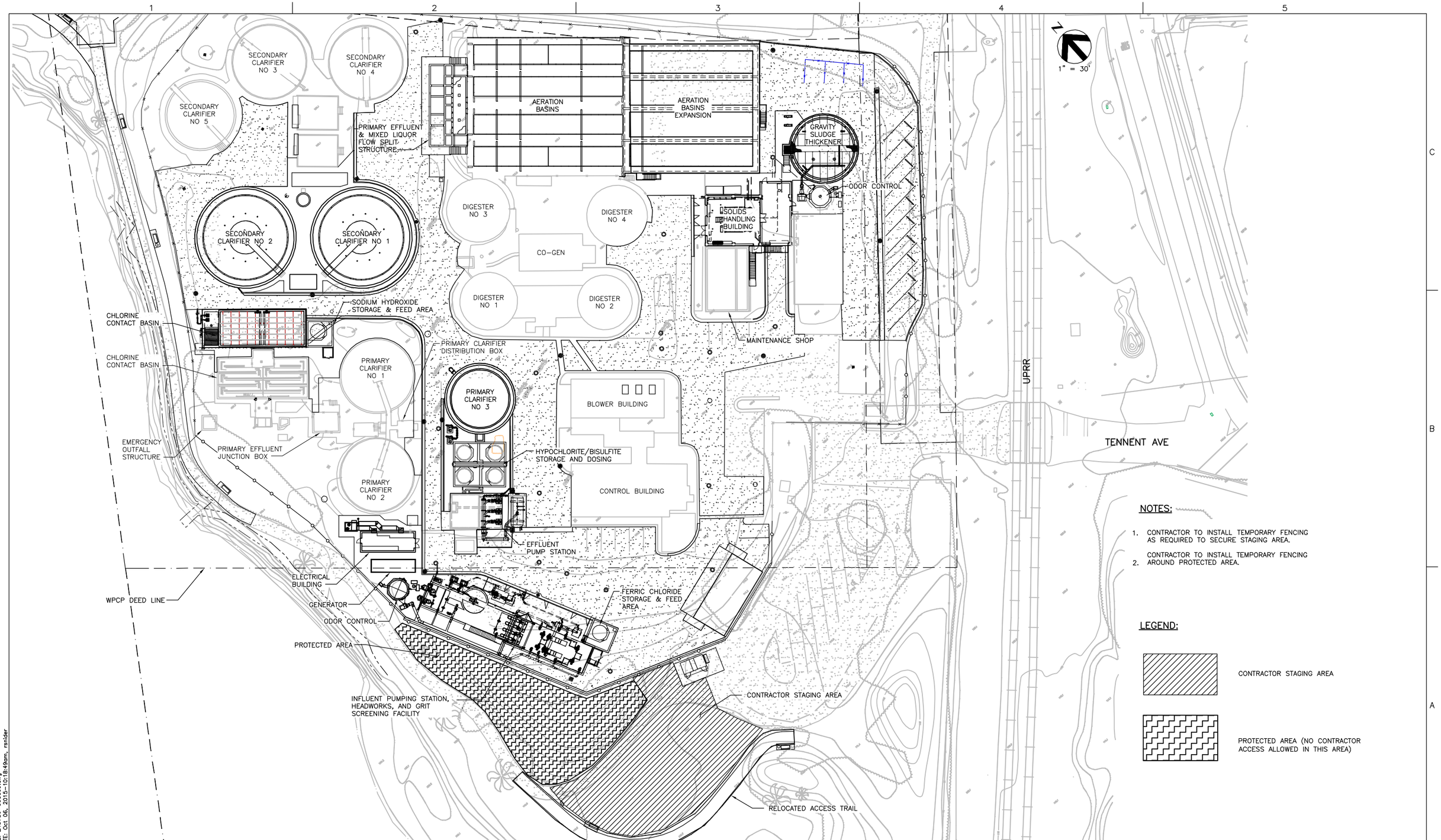

NOTES:

1. CONTRACTOR TO INSTALL TEMPORARY FENCING AS REQUIRED TO SECURE STAGING AREA.
2. CONTRACTOR TO INSTALL TEMPORARY FENCING AROUND PROTECTED AREA.

LEGEND:

CONTRACTOR STAGING AREA

PROTECTED AREA (NO CONTRACTOR ACCESS ALLOWED IN THIS AREA)

FILE: 215786-000009.dwg
DATE: Oct 06, 2015 - 10:18:49am, rsnider

HDR Engineering, Inc.

ISSUE	DATE	DESCRIPTION
A	JUNE-2015	ISSUED FOR BID

PROJECT MANAGER	C. OLSON
DESIGNED	R. NATOLI
DESIGNED	
CHECKED	C. OLSON
DRAWN	B. DOWN
DATE	JUNE 30, 2015
PROJECT NUMBER	215786

REGISTERED PROFESSIONAL ENGINEER
CRAIG A. OLSON
NO. 39819
EXP. 12/31/15
CIVIL
STATE OF CALIFORNIA
06-30-15

CITY OF PINOLE CALIFORNIA 1903

PINOLE/HERCULES
WATER POLLUTION
CONTROL PLANT UPGRADE
CLIENT PN

GENERAL

CONTRACTOR STAGING AREA

0 1" 2"

FILENAME	215786-00G008
SCALE	AS NOTED

SHEET
00G009

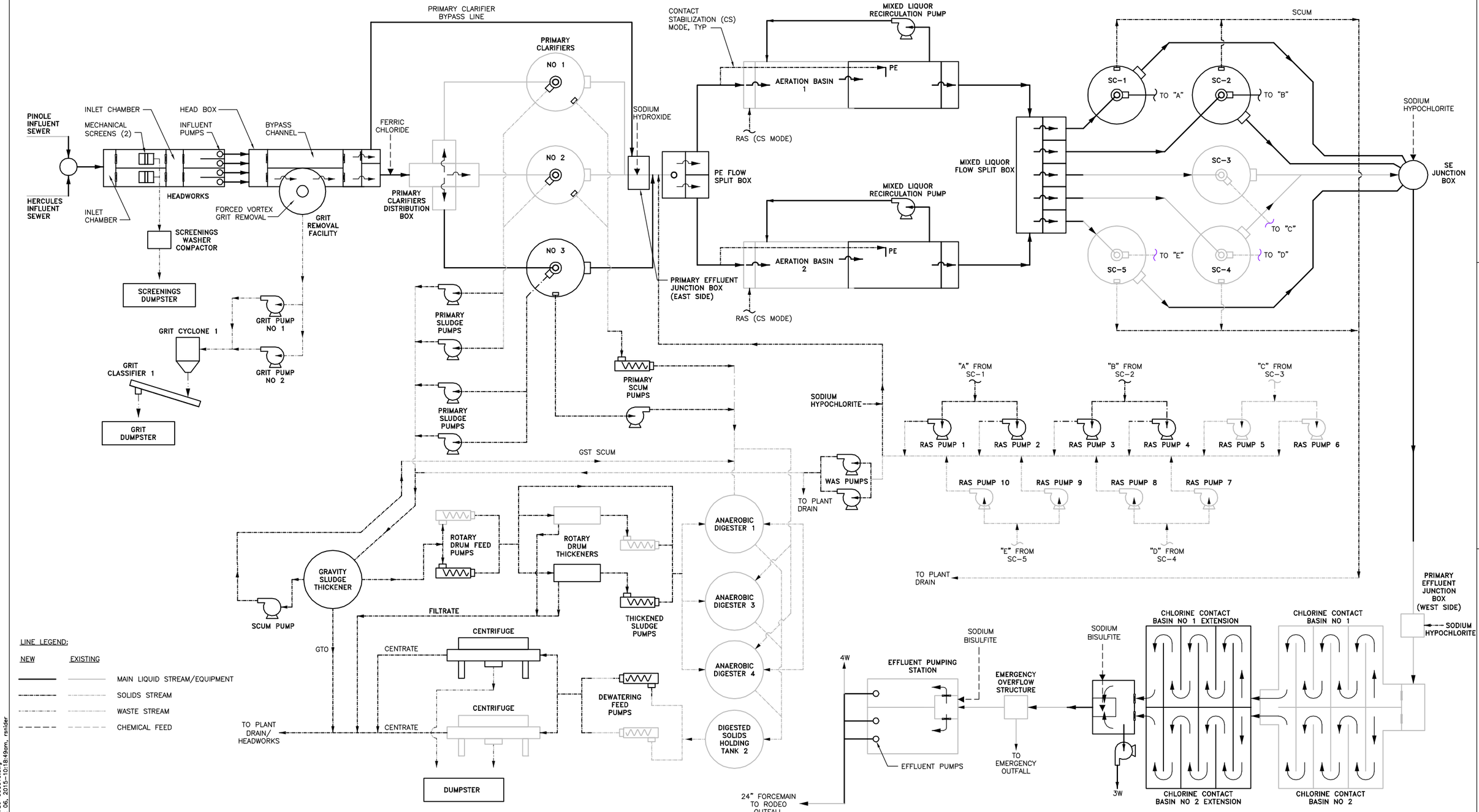

FILE: 215786-000010.dwg
DATE: Oct 06, 2015-10:18:49am, rsnider

HDR Engineering, Inc.

ISSUE	DATE	DESCRIPTION
A	JUNE-2015	ISSUED FOR BID

PROJECT MANAGER	C. OLSON
DESIGNED	R. NATOLI
DESIGNED	
CHECKED	C. OLSON
DRAWN	B. DOWN
DATE	JUNE 30, 2015
PROJECT NUMBER	215786

REGISTERED PROFESSIONAL ENGINEER CRAIG A. OLSON NO. 39819 EXP. 12/31/15 CIVIL STATE OF CALIFORNIA 06-30-15

CITY OF PINOLE CALIFORNIA 1903

PINOLE/HERCULES WATER POLLUTION CONTROL PLANT UPGRADE CLIENT PN

GENERAL

PROCESS FLOW SCHEMATIC

0 1" 2"

FILENAME	215786-00G010
SCALE	NONE

SHEET **00G010**

Design Flows			**Primary Sludge Pumps (PC 3)**			**RAS Pumps (42PMP001, 42PMP002, 42PMP003, 42PMP004)**			**Sodium Bisulfite**	
Avg Dry Weather (ADWF), mgd	4.06		No.	2		No. of Pumps	4		No. of Tanks	2
Maximum Month (MM), mgd	6.1		Type	CENTRIFUGAL, RECESSED IMPELLER		Type	NON-CLOG CENTRIFUGAL		Tank Volume, gallons	7,000
Maximum Day (MD), mgd	11.3		Capacity per Pump, gpm	175		Capacity per Pump, gpm	1,040		No. of Metering Pumps	3
Peak Hour, mgd	20.0		TDH, ft	65		TDH, ft	20		Metering Pump Type	PERISTALTIC
			Motor Size, hp	10		Motor Size	10		Dechlorination Metering Pumps (1+1), gph	0-50
Design Influent Loadings			Motor Control	CONSTANT		Motor Control	VARIABLE SPEED		Dechlorination Metering Pumps (1), gph	0-250
ADWF Suspended Solids Load, lbs/day	10,500								Design Dose, mg/L	8-20
ADWF cBOD Load, lbs/day	10,500		**Primary Scum Pumps (PC 3)**			**WAS Pumps (42PMP031, 42PMP032)**				
ADWF Ammonia Load, lbs/day	1,050		No.	1		No. of Pumps	2		**Solids Handling Facilities**	
ADWF TKN Load, lbs/day	1,590		Type	SUBMERSIBLE, CHOPPER		Type	NON-CLOG CENTRIFUGAL		ADWF Sludge Loads	
			Capacity per Pump, gpm	150		Capacity per Pump, gpm	75		Primary, lbs/day	3,180
MM Suspended Solids Load, lbs/day	13,300		TDH	65		TDH, ft	10		WAS, lbs/day	2,500
MM cBOD Load, lbs/day	12,300		Motor Size, hp	5		Motor Size	5		MM Sludge Loads	
MM Ammonia Load, lbs/day	1,230		Motor Control	CONSTANT		Motor Control	CONSTANT		Primary, lbs/day	9,970
MM TKN Load, lbs/day	1,870								WAS, lbs/day	4,260
			Aeration Basins			**Effluent Disinfection**				
Influent Flow Meter			No. of Trains	2		Ex. Chlorine Contact Basin			**Gravity Sludge Thickener**	
Type	Parshall		Aeration Train Dimensions			No. of Basins	2		No. and Diameter	1@ 40 ft
No.	2		Length, ft	190		Side Water Depth	4.5		Surface Area, ft^2	1,257
Throat Size, Inches	18		Width, ft	42		Length	25.7		Side Water Depth	8
Maximum Capacity, mgd	10		Side Water Depth, ft	14.7		Width	29.4		Volume, MG	75,200
			Volume per Train, MG	0.8		Total Volume, gallons	46,500		MM Solids Loading Rate, lbs/day/ft2	11.3
Influent Screens										
Mechanical Screen Type	Perforated Plate		Nitrification/Denitrification Mode			New Chlorine Contact Basin			**Primary Scum Pumps (PC 3)**	
No. of Screens	2		Aerobic Solids Residence Time, days	6.5		No. of Basins	2		No.	1
Opening Size, mm	6		Approximate MM MLSS Concentration, mg/L	3,500		Side Water Depth	15		Type	SUBMERSIBLE, CHOPPER
Capacity per Screen, mgd	12		Mixed Liquor Recirculation Pump			Length	27.3		Capacity per Pump, gpm	150
			Type	PROPELLER		Width	22.5		TDH	65
Influent Pump Station			No. per Train	1		Total Volume, gallons	137,600		Motor Size, hp	5
Pump Type	Submersible		MM Flow Rate, gpm	6,300		No. of Passes	6		Motor Control	CONSTANT
No. of Pumps	4 (3 duty, 1 standby)		Motor Size per Unit, HP	5		Theoretical Contact Time at MM, minutes	43.5			
Capacity per Pump, mgd	6.7		Motor Control	VARIABLE SPEED		Theoretical Contact Time at MD, minutes	23.5		**Gravity Thickened Sludge Pumps**	
TDH, ft	35					Theoretical Contact Time at PH, minutes	13.3		No.	2
Firm Pumping Capacity, mgd	20.1		Contact Stabilization Mode						Type	PROGRESSIVE CAVITY
Total Pumping Capacity, mgd	26.8		Initiation Flow Set Point, mgd	9.0		**Effluent Pumping**			Capacity, gpm	150
Motor Size, HP	60		Approximate MLSS Concentration, mg/L	1,500		No. of Pumps	3		TDH, ft	35
Motor Control	VARIABLE SPEED					Type	VERTICAL TURBINE		Motor Size, hp	5
			Aeration Blowers			Capacity, mgd	14.2		Motor Control	Variable Speed
Grit Removal			Number	3		TDH, ft	230 ft			
Type	Vortex		Type	HIGH SPEED TURBO		Motor Size, hp	450		**Rotary Drum Thickener**	
No of Units	1		Capacity per Unit, scfm	4,000		Motor Control	VARIABLE SPEED		No. of Units	2
Diameter of Unit, ft	16		Discharge Pressure, psig	8.5					Capacity per Unit, gpm	150
Capacity per Unit, mgd	20		Motor Size per Unit, HP	200		**3W Pumps**				
			Motor Control	VARIABLE SPEED		No. of Pumps	2		**Thickened Sludge Pumps**	
Existing Primary Clarifiers (PC 1 and PC 2)						Type	VERTICAL TURBINE		No. of Units	2
No. And Diameter	2@ 45 ft diameter		**New Secondary Clarifiers (SC 1 and SC 2)**			Capacity, gpm	400		Capacity per Unit, gpm	50
Capacity per Unit, mgd	4		No. and Diameter	2 @ 65 ft		TDH, ft	150		TDH, ft	330
Side Water Depth, ft	8.5		Side Water Depth, ft	18		Motor Size	15		Motor Size, hp	10
Surface Area Each, ft^2	1,590		Surface Area per Clarifier, ft^2	3,318		Motor Control	VARIABLE SPEED		Motor Control	VARIABLE SPEED
MM SOR (GPD/SF)	1,260		Volume per Clarifier, MG	0.45						
MM Detention Time (hrs)	1.2		Maximum Return Rate per Clarifier, MGD	3.0		**Ferric Chloride**			**Solids Dewatering (new unit)**	
			Surface Overflow Rate at MM, gpd/ft^2	542		No. of Tanks	1		No.	1
New Primary Clarifier 3			Solids Loading Rate at MM (50% RAS Rate, All Clarifiers in Service), gpd/ft^2	29		Tank Volume, gallons	5,000		Capacity per Unit, gpm	150
No. And Diameter	1 @ 45 ft diameter		Solids Loading Rate at PH (50% RAS Rate, All Clarifiers in Service), gpd/ft^2	34		No. of Metering Pumps	3		Motor Size (Back Drive + Main Drive), hp	65
Capacity, mgd	4					Metering Pump Type	PERISTALTIC			
Side Water Depth, ft	14		**Ex. Secondary Clarifiers (SC 3 and SC 4)**			Metering Pump Capacity (2+1), gph	0-50			
Surface Area, ft^2	1,590		No. and Diameter	2 @ 45 ft		Design Dose, mg/L	1 - 20 mg/L			
MM SOR, GPD/SF	1,260		Side Water Depth (SC 3 and SC 4), ft	12						
MM Detention Time (hrs)	1.7		Surface Area per Clarifier, ft^2	1,590		**Sodium Hydroxide**				
			Volume per Clarifier, MG	0.14		No. of Tanks	1			
Primary Sludge Pumps (PC 1 and PC 2)			Maximum Return Rate per Clarifier, MGD	1.3		Tank Volume, gallons	5,000			
No.	2		Surface Overflow Rate at MM, gpd/ft^2	503		No. of Metering Pumps	2			
Type	CENTRIFUGAL, RECESSED IMPELLER		Solids Loading Rate at MM (50% RAS Rate, All Clarifiers in Service), gpd/ft^2	22		Metering Pump Type	PERISTALTIC			
Capacity per Pump, gpm	175		Solids Loading Rate at PH (48% RAS Rate, All Clarifiers in Service), gpd/ft^2	31		Metering Pump Capacity, gph	0-50			
TDH, ft	65					Design Dose, mg/L	1-40 mg/L			
Motor Size, hp	10		**Ex. Secondary Clarifier (SC 5)**							
Motor Control	CONSTANT		No. and Diameter	1 @ 45 ft		**Sodium Hypochlorite**				
			Side Water Depth, ft	18		No. of Tanks	2			
Primary Scum Pump (PC1/2)			Surface Area per Clarifier, ft^2	1,590		Tank Volume, gallons	7,000			
No.	1		Volume per Clarifier, MG	0.14		No. of Metering Pumps	4			
Type	PROGRESSIVE CAVITY		Maximum Return Rate per Clarifier, MGD	1.3		Metering Pump Type	PERISTALTIC			
Capacity per Pump, gpm	150		Surface Overflow Rate at MM, gpd/ft^2	503		Metering Pump Capacity				
TDH	65		Solids Loading Rate at MM (50% RAS Rate, All Clarifiers in Service), gpd/ft^2	22		Disinfection Metering Pumps (1+1), gph	0-250			
Motor Size, hp	5		Solids Loading Rate at PH (48% RAS Rate, All Clarifiers in Service), gpd/ft^2	31		Disinfection - RAS Chlorination (1+1), gph	0-50			
Motor Control	CONSTANT					Disinfection Dose, mg/L	15-35			

FILE: 215786-00G011.dwg
DATE: Oct 06, 2015-10:18:49am, rsnider

HDR Engineering, Inc.

ISSUE	DATE	DESCRIPTION
A	JUNE-2015	ISSUED FOR BID

PROJECT MANAGER	C. OLSON
DESIGNED	R. NATOLI
DESIGNED	M. PERINPANAYAGAM
CHECKED	C. OLSON
DRAWN	B. DOWN
DATE	JUNE 30, 2015
PROJECT NUMBER	215786

REGISTERED PROFESSIONAL ENGINEER
CRAIG A. OLSON
NO. 39819
EXP. 12/31/15
CIVIL
STATE OF CALIFORNIA
06-30-15

CITY OF PINOLE CALIFORNIA 1903

PINOLE/HERCULES
WATER POLLUTION
CONTROL PLANT UPGRADE
CLIENT PN

GENERAL

DESIGN CRITERIA

0 1" 2"

FILENAME	215786-00G011
SCALE	NONE

SHEET
00G011

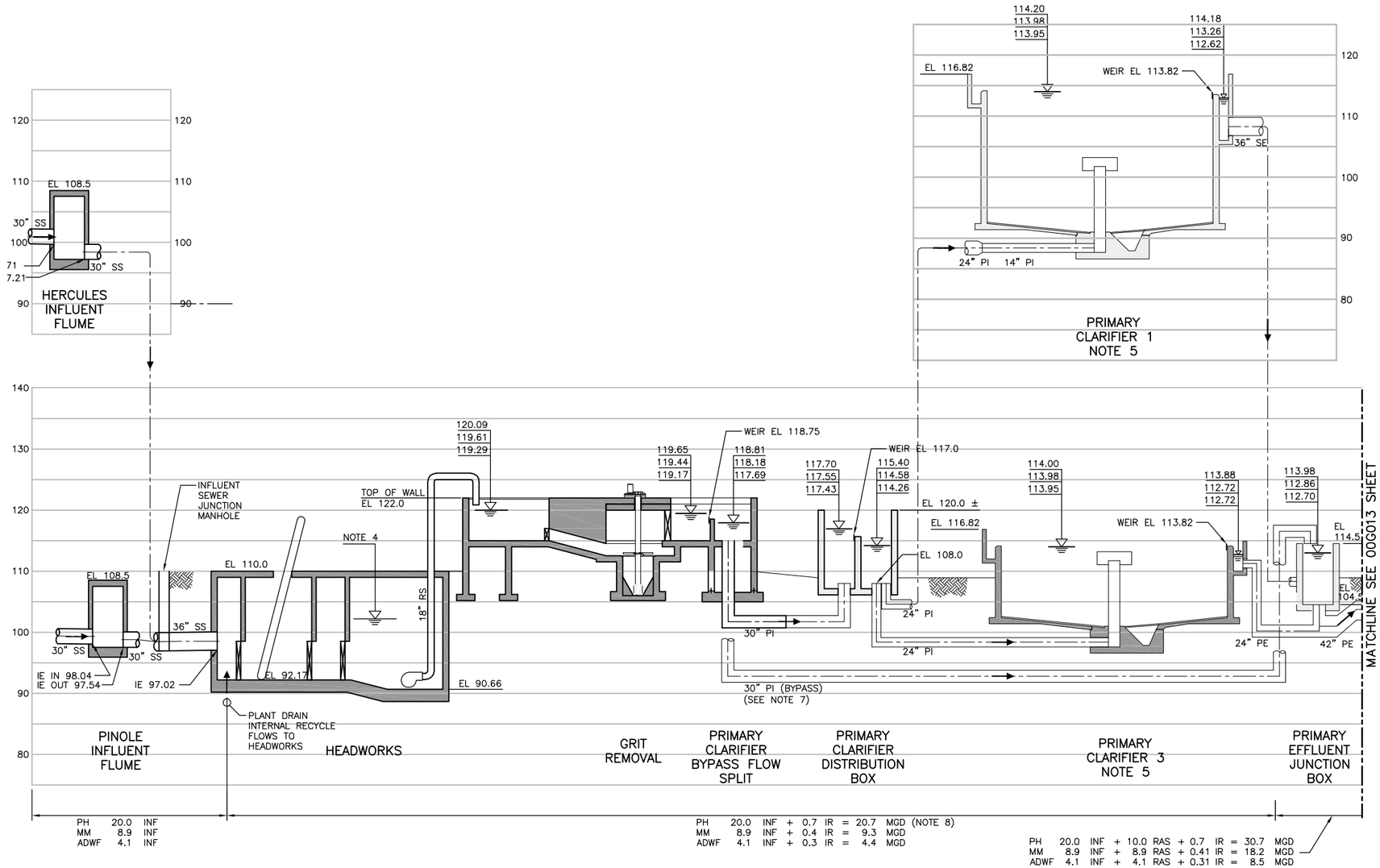

NOTES:

1. ENERGY GRADE LINE ELEVATIONS (IN FEET) ARE SHOWN AS FOLLOWS:
   - PEAK HOUR FLOW (PH)
   - MAXIMUM MONTH FLOW (MM)
   - AVERAGE DRY WEATHER FLOW (ADWF)
2. PROFILE IS BASED ON INFLUENT AND RECYCLE FLOWS (IN MGD) FOR INDICATED FLOW CONDITION.

	ADWF	MM	PH
INFLUENT (INF)	4.1	8.9	20.0
RETURN ACTIVATED SLUDGE (RAS)	4.1	8.9	10.0
INTERNAL RECYCLE (IR)	0.3	0.4	0.7
MIXED LIQUID RECYCLE (MLR)	8.2	17.8	17.8*

*SEE NOTE 10

3. PROFILE BASED ON THE FOLLOWING NUMBER OF PROCESS UNITS IN SERVICE FOR INDICATED FLOW CONDITION.

	ADWF	MM	PH
PRIMARY CLARIFIERS	2	3	3
AERATION BASINS	1	2	2
SECONDARY CLARIFIERS	4*	5	5
CHLORINE CONTACT BASINS	1	2	2

*SECONDARY CLARIFIER 1 IS OFFLINE IN HYDRAULIC MODEL IN AVERAGE DRY WEATHER FLOW SCENARIO.

4. WATER SURFACE ELEVATION IN INFLUENT PUMP STATION IS CONTROLLED BY INFLUENT PUMPS.
5. HYDRAULIC PROFILE SHOWN THROUGH PRIMARY CLARIFIER NUMBER 1, WHICH HAS WORST CASE HYDRAULICS OF EXISTING PRIMARY CLARIFIERS AND THROUGH NEW PRIMARY CLARIFIER 3.
6. MAXIMUM EFFLUENT PUMPING CAPACITY IS 14.2 MGD, ALL FLOWS ABOVE 14.2 MGD ARE BYPASSED OUT TO SHALLOW OUTFALL VIA EMERGENCY OUTFALL STRUCTURE.
7. FLOWS ABOVE 12 MGD ARE BYPASSED AROUND THE PRIMARY CLARIFIERS TO THE PRIMARY EFFLUENT JUNCTION BOX FROM THE GRIT EFFLUENT CHANNEL BYPASS FLOWS CONTROLLED VIA OPENING GATE.
8. HYDRAULIC PROFILE SHOWN THROUGH WORST CASE HYDRAULICS EXISTING AND NEW SECONDARY CLARIFIERS.
9. NOTE THAT EXISTING SECONDARY CLARIFIERS 3 AND 4 HAVE A TOP OF CONCRETE ELEVATION OF 112.08.
10. HYDRAULICS FOR NON-CONTACT STABILIZATION MODE SHOWN ON PROFILE FOR ALL FLOW CONDITIONS.

FILE: 215786-000012.dwg
DATE: Oct 06, 2015-10:18:49am, ranider

HDR Engineering, Inc.

ISSUE	DATE	DESCRIPTION
A	JUNE-2015	ISSUED FOR BID

PROJECT MANAGER	C. OLSON
DESIGNED	R. NATOLI
DESIGNED	
CHECKED	C. OLSON
DRAWN	B. DOWN
DATE	JUNE 30, 2015
PROJECT NUMBER	215786

REGISTERED PROFESSIONAL ENGINEER ROBERT G. NATOLI NO. 78271 EXP. 09/30/15 CIVIL STATE OF CALIFORNIA 06-30-15

CITY OF PINOLE CALIFORNIA 1903

PINOLE/HERCULES WATER POLLUTION CONTROL PLANT UPGRADE CLIENT PN

GENERAL

HYDRAULIC PROFILE

0 1" 2"

FILENAME	215786-00G012
SCALE	NTS

SHEET 00G012

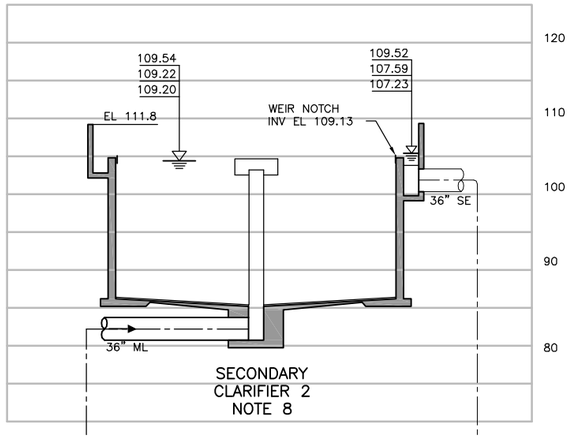

SECONDARY
CLARIFIER 2
NOTE 8

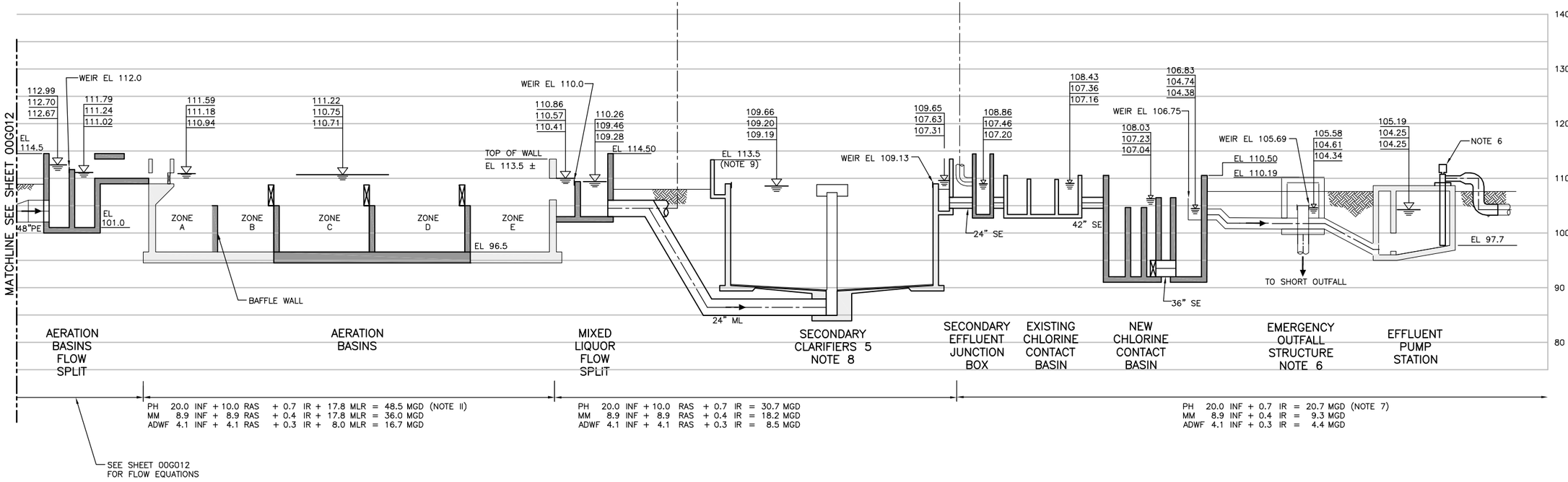

NOTES:

1. SEE SHEET 00G012 FOR HYDRAULIC PROFILE NOTES 1 THROUGH 10.

FILE: 215786-00G013.dwg
DATE: Oct 06, 2015-10:18:49am, rsnider

HDR Engineering, Inc.

ISSUE	DATE	DESCRIPTION
A	JUNE-2015	ISSUED FOR BID

PROJECT MANAGER	C. OLSON
DESIGNED	R. NATOLI
DESIGNED	
CHECKED	C. OLSON
DRAWN	B. DOWN
DATE	JUNE 30, 2015
PROJECT NUMBER	215786

REGISTERED PROFESSIONAL ENGINEER
ROBERT G. NATOLI
NO. 78271
EXP. 09/30/15
CIVIL
STATE OF CALIFORNIA
04-30-15

CITY OF PINOLE CALIFORNIA 1903

PINOLE/HERCULES
WATER POLLUTION
CONTROL PLANT UPGRADE
CLIENT PN

GENERAL

HYDAULIC PROFILE 2

0 1" 2"

FILENAME	215786-00G013
SCALE	NONE

SHEET
00G013

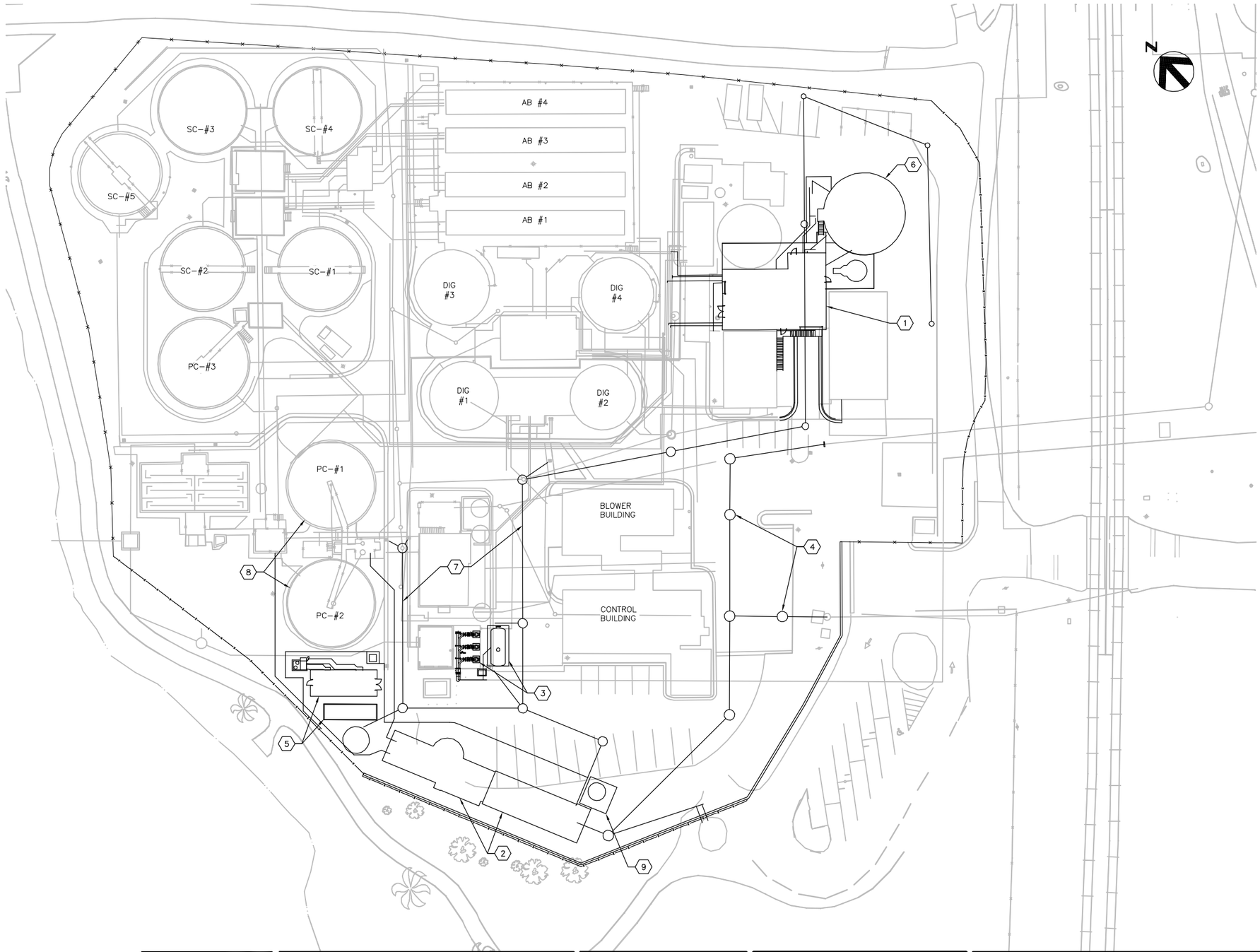

STAGE I GENERAL CONSTRUCTION CONSTRAINT:

1. BYPASS PUMPING, FOR ANY REASON, IS NOT ALLOWED DURING THE WET WEATHER SEASON.
2. NEW GRAVITY THICKENER AND SOLIDS HANDLING BUILDING MUST BE COMPLETE TO ALLOW FOR RELOCATION OF EXISTING SOLIDS MANAGEMENT SYSTEM AND ULTIMATELY CONSTRUCTION OF NEW AERATION BASINS UNDER STAGE II WORK.
3. NEW HEADWORKS FACILITIES INCLUDING BUT NOT LIMITED TO INFLUENT SEWERS, PUMP STATION, SCREENS, GRIT REMOVAL, FERRIC CHLORIDE SYSTEM, PRIMARY INFLUENT PIPING, ELECTRICAL AND CONTROL SYSTEMS AND RETAILING WALL MUST BE COMPLETE AND OPERATIONAL PRIOR TO DEMOLITION OF ANY PORTIONS OF THE SECONDARY SYSTEM.
4. PRIMARY CLARIFIER MECHANISMS IN EXISTING PRIMARY CLARIFIERS NO 1 AND NO 2 MUST BE REPLACED PRIOR TO ADVANCING TO ANY PORTION OF STAGE II WORK.
5. NO FEWER THAN TWO PRIMARY CLARIFIERS MUST BE ON–LINE AND OPERATIONAL AT ALL TIMES.
6. EFFLUENT SURGE TANK AND REPLACEMENT EFFLUENT PUMPS MUST BE ON–LINE AND OPERATIONAL PRIOR TO DEMOLITION WORK REQUIRED TO CONSTRUCT PRIMARY CLARIFIER NO 3 UNDER STAGE II WORK.

MAJOR WORK ITEMS:

1. SOLIDS HANDLING BUILDING.
2. HEADWORKS (INFLUENT PUMPING, GRIT REMOVAL. SCREENINGS AND RETAINING WALL.
3. EFFLUENT PUMPS AND SURGE TANK.
4. INFLUENT SEWER.
5. ELECTRICAL BUILDING AND GENERATOR.
6. GRAVITY SLUDGE THICKENER.
7. SOLIDS AND HEADWORKS AREA DRAINS.
8. PRIMARY CLARIFIER 1 AND 2 MECHANISMS.
9. FERRIC CHLORIDE FACILITIES.

FILE: 215786–00G014.dwg
DATE: Oct 06, 2015–10:18:49am, rsnider

HDR Engineering, Inc.

ISSUE	DATE	DESCRIPTION
A	JUNE–2015	ISSUED FOR BID

PROJECT MANAGER	C. OLSON
DESIGNED	R. NATOLI
DESIGNED	J. JETTON
CHECKED	C. OLSON
DRAWN	B. DOWN
DATE	JUNE 30, 2015
PROJECT NUMBER	215786

REGISTERED PROFESSIONAL ENGINEER
CRAIG A. OLSON
NO. 39819
EXP. 12/31/15
CIVIL
STATE OF CALIFORNIA
06-30-15

CITY OF PINOLE CALIFORNIA 1903

PINOLE/HERCULES
WATER POLLUTION
CONTROL PLANT UPGRADE
CLIENT PN

GENERAL

CONSTRUCTION SEQUENCING STAGE I

0 1" 2"

FILENAME	215786–00G014
SCALE	1" = 30'

SHEET **00G014**

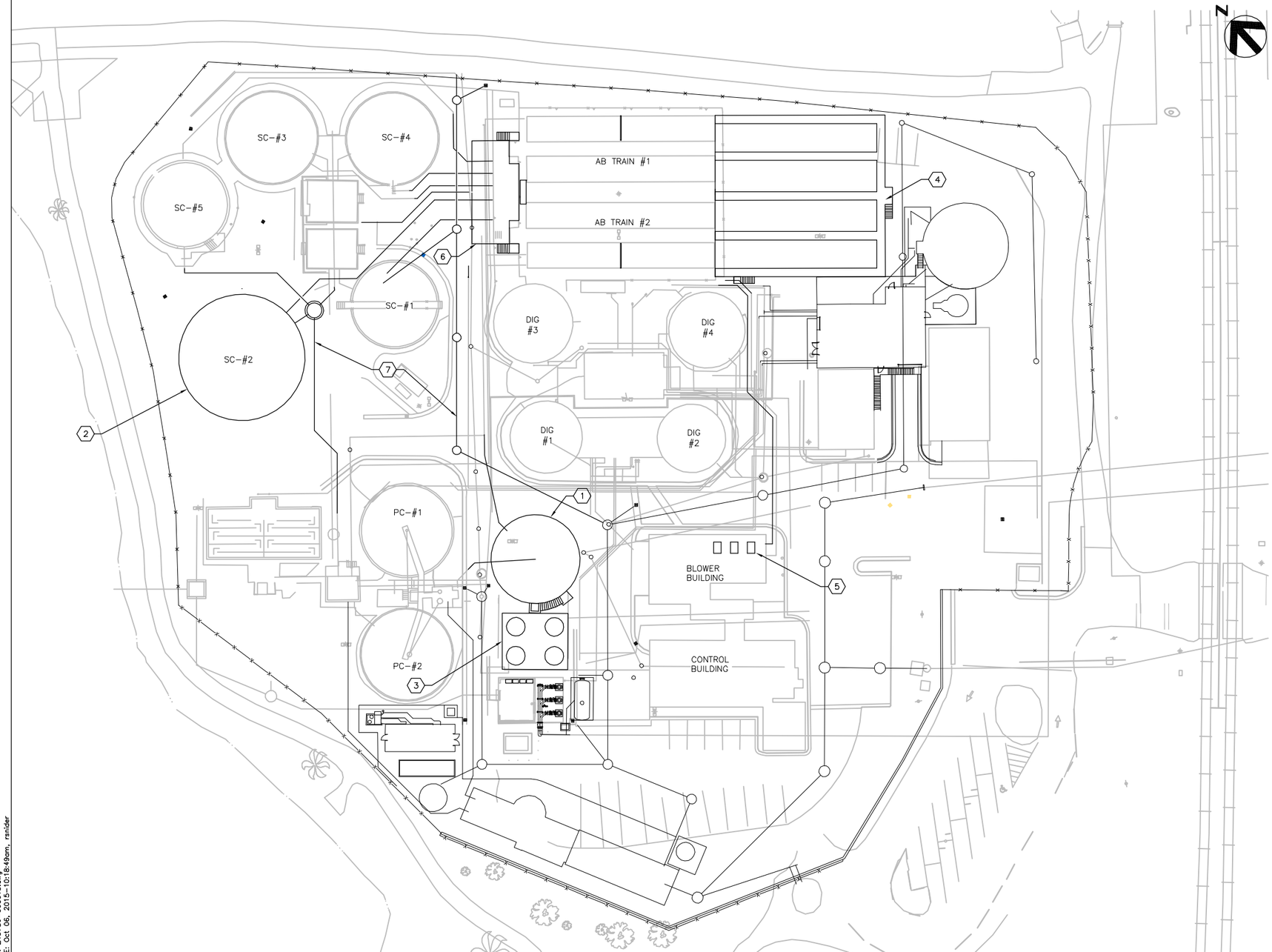

STAGE II GENERAL CONSTRUCTION CONSTRAINTS:

1. BYPASS PUMPING, FOR ANY REASON, IS NOT ALLOWED DURING THE WET WEATHER SEASON.
2. TEMPORARY FACILITIES MUST BE MAINTAINED CONTINUOUSLY FOR BOTH SODIUM HYPOCHLORITE AND SODIUM BISULFITE AT ALL TIMES. BOTH CHEMICALS ARE CRITICAL TO MAINTAINING PERMIT REQUIREMENTS..
3. NO FEWER THAN THREE SECONDARY CLARIFIERS MUST BE ON–LINE AND OPERATIONAL AT ALL TIMES.
4. NO FEWER THAN FOUR AERATION BASINS OF THE CURRENT SIZE MUST BE ON–LINE AND OPERATIONAL AT ALL TIMES. THIS REQUIRES EITHER ALL EXISTING AERATION BASINS OR TWO OF THE EXISTING AND TWO OF THE NEW AERATION BASINS BE ON–LINE AND OPERATIONAL AT ALL TIMES.

MAJOR WORK ITEMS:

1. PRIMARY CLARIFIER 3.
2. SECONDARY CLARIFIER 2.
3. SODIUM HYPOCHLORITE AND BISULFITE CHEMICAL SYSTEMS.
4. AERATION BASIN EXTENSION.
5. BLOWERS.
6. PE/ML SPLITTER BOX.
7. CLARIFIER AREA DRAINS.

FILE: 215786–000015.dwg
DATE: Oct 06, 2015–10:18:49am, ranider

HDR Engineering, Inc.

ISSUE	DATE	DESCRIPTION
A	JUNE–2015	ISSUED FOR BID

PROJECT MANAGER	C. OLSON
DESIGNED	R. NATOLI
DESIGNED	J. JETTON
CHECKED	C. OLSON
DRAWN	B. DOWN
DATE	JUNE 30, 2015
PROJECT NUMBER	215786

REGISTERED PROFESSIONAL ENGINEER
CRAIG A. OLSON
NO. 39819
EXP. 12/31/15
CIVIL
STATE OF CALIFORNIA
06-30-15

CITY OF PINOLE CALIFORNIA 1903

PINOLE/HERCULES
WATER POLLUTION
CONTROL PLANT UPGRADE
CLIENT PN

GENERAL

CONSTRUCTION SEQUENCING STAGE II

0 1" 2"

FILENAME	215786–00G015
SCALE	1" = 30'

SHEET
00G015

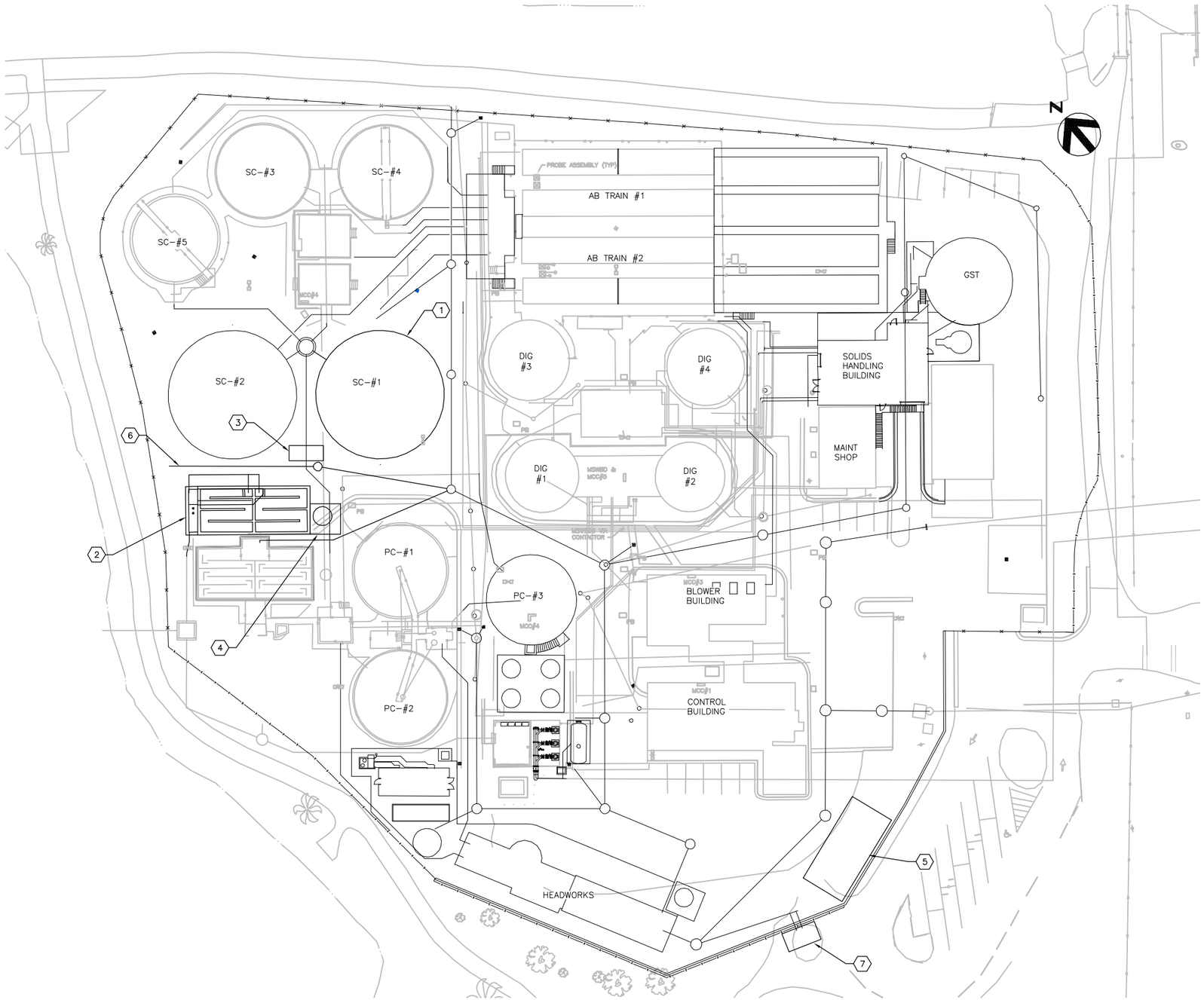

STAGE III GENERAL CONSTRUCTION CONSTRAINTS:

1. BYPASS PUMPING, FOR ANY REASON, IS NOT ALLOWED DURING THE WET WEATHER SEASON.
2. THE ENTIRE EXISTING CHLORINE CONTACT BASIN MUST BE ON-LINE AND OPERATIONAL AT ALL TIMES THROUGHOUT CONSTRUCTION.

MAJOR WORK ITEMS:

1. SECONDARY CLARIFIER 1.
2. CHLORINE CONTACT BASIN.
3. DIGESTER GAS BURNER.
4. SODIUM HYDROXIDE SYSTEM.
5. PUBLIC WORKS BUILDING.
6. CHLORINE CONTACT BASIN AREA DRAINS.
7. RESTROOM FACILITIES.

FILE: 215786-000016.dwg
DATE: Oct 06, 2015-10:18:49am, rsnider

HDR Engineering, Inc.

ISSUE	DATE	DESCRIPTION
A	JUNE-2015	ISSUED FOR BID

PROJECT MANAGER	C. OLSON
DESIGNED	
DESIGNED	J. JETTON
CHECKED	C. OLSON
DRAWN	B. DOWN
DATE	JUNE 30, 2015
PROJECT NUMBER	215786

REGISTERED PROFESSIONAL ENGINEER
CRAIG A. OLSON
NO. 39819
EXP. 12/31/15
CIVIL
STATE OF CALIFORNIA
06-30-15

CITY OF PINOLE CALIFORNIA 1903

PINOLE/HERCULES
WATER POLLUTION
CONTROL PLANT UPGRADE
CLIENT PN

GENERAL

CONSTRUCTION SEQUENCING STAGE III

0 1" 2"

FILENAME	215786-00G016
SCALE	NONE

SHEET **00G016**

EXISTING PROJECT DRAWING SETS (NOTE 3)								
AREA	SEWAGE TREATMENT WORKS, M. CARLETON YODER, 1955	WATER POLLUTION CONTROL FACILITIES, YODER TROTTER ORLOB, 1971	EFFLUENT PUMP STATION & FORCEMAIN TO RODEO, METCALF AND EDDY, 1977	WASTEWATER TREATMENT PLANT MODIFICATION, METCALF & EDDY, 1978	WASTEWATER TREATMENT PLANT EXPANSION, METCALF & EDDY, 1983	SECONDARY CLARIFIER EXPANSION, BROWN & CALDWELL, 2002	ANAEROBIC DIGESTION IMPROVEMENTS, BROWN & CALDWELL, 2006	UNDOCUMENTED WORK PERFORMED BY PLANT STAFF (NOTE 4)
12 HEADWORKS 66 MAINTENANCE SHOP	ORIGINAL CONSTRUCTION (SEE CONTROL BUILDING SHEETS)	HEADWORKS MODIFICATIONS, SHOP/OFFICE/LAB CONVERTED TO CHLORINE BLDG; CHLORINATOR ROOM & FEED SYSTEM CREATED (SEE CHLORINE BUILDING SHEETS)	N/A	N/A	N/A	N/A	N/A	ADDITION OF FERRIC CHLORIDE AND HYPOCHLORITE STORAGE & FEED SYSTEMS; CONVERSION OF CHLORINE ROOM TO MAINTENANCE SHOP
21 PRIMARY CLARIFIERS	ORIGINAL CONSTRUCTION FOR PRIMARY CLARIFIER NO 1	ORIGINAL CONSTRUCTION FOR PRIMARY CLARIFIER NO 2	N/A	N/A	ORIGINAL CONSTRUCTION FOR PRIMARY CLARIFIER NO 3	N/A	N/A	N/A
22 PRIMARY CLARIFIER NO 1 & NO 2; 23 PRIMARY CLARIFIER NO 3	N/A	ORIGINAL CONSTRUCTION FOR DISTRIBUTION BOX, SCUM AND SLUDGE PUMPING, AND PRIMARY CLARIFIER DIVERSION STRUCTURE (AREA 22)	N/A	N/A	ORIGINAL CONSTRUCTION FOR PRIMARY CLARIFIER NO 3 SCUM AND SLUDGE PUMP STRUCTURE (AREA 23); MODIFICATION OF PRIMARY CLARIFIER DISTRIBUTION BOX (AREA 22)	N/A	N/A	N/A
31 AERATION BASINS	N/A	ORIGINAL CONSTRUCTION FOR BASINS 1 & 2 (TRAIN 1)	N/A	N/A	ORIGINAL CONSTRUCTION FOR BASINS 3 & 4 (TRAIN 2)	N/A	N/A	N/A
32 SECONDARY CLARIFIER SPLITTER BOX	N/A	N/A	N/A	N/A	ORIGINAL CONSTRUCTION	NOT CONSTRUCTED PER PLANS – SEE 'AS-BUILT' SKETCHES IN SET FOR STRUCTURE MODIFICATION	N/A	N/A
41 SECONDARY CLARIFIERS	N/A	ORIGINAL CONSTRUCTION FOR SECONDARY CLARIFIER NO 1 AND NO 2	N/A	N/A	ORIGINAL CONSTRUCTION FOR SECONDARY CLARIFIER NO 3 AND NO 4	ORIGINAL CONSTRUCTION FOR SECONDARY CLARIFIER NO 5	N/A	N/A
42 RAS/WAS PUMP STATIONS	N/A	ORIGINAL CONSTRUCTION FOR RAS/WAS PUMP STATION NO 1	N/A	ADDED FLOWMETERS ON RAS DISCHARGE LINES	ORIGINAL CONSTRUCTION FOR RAS/WAS PUMP STATION NO 2; ADDITION OF WAS PIPING IN RAS/WAS PS NO 1	NOT CONSTRUCTED PER PLANS – SEE 'AS-BUILT' SKETCHES IN SET FOR PUMP AND PIPING MODIFICATIONS	N/A	N/A
51 BLOWER BUILDING	N/A	ORIGINAL CONSTRUCTION	N/A	N/A	AIR FILTRATION MODIFICATIONS	N/A	ELECTRICAL MODIFICATIONS	REMOVAL OF BLOWERS; ADDITION OF CAGED STORAGE AREA
61 SOLIDS HANDLING AREA	N/A	ORIGINAL CONSTRUCTION OF SLUDGE THICKENER, GRIT REMOVAL, AND SLUDGE DEWATERING FACILITIES	N/A	N/A	ADDITION OF CENTTRIFUGE AREA, SLUDGE HOPPER, AND ODOR CONTROL SYSTEM	N/A	N/A	VARIOUS SLUDGE PUMP AND PIPING MODIFICATIONS
66 POLYMER BUILDING	N/A	N/A	N/A	ORIGINAL CONSTRUCTION (SEE DISSOLVED AIR FLOTATION THICKENER SHEETS)	ADDITION OF FRP COVERS, FOUL AIR DUCTS, COMPRESSOR/CA LINE, AND POLYMER LINES	N/A	N/A	REMOVAL OR ABANDONMENT OF DAFT EQUIPMENT, ADDITION OF POLYMER STORAGE & FEED SYSTEM, ADDITION OF 1W LINE
71 CHLORINE CONTACT BASINS	N/A	ORIGINAL CONSTRUCTION OF BASINS AND 3W STSTEM	N/A	N/A	N/A	N/A	N/A	ADDITION OF SODIUM BISULFITE FEED SYSTEM, SAMPLER, AND CHLORINE ANALYZERS IN SHED
73 EMERGENCY OUTFALL STRUCTURE (ALL WORK ON PROCESS SHEETS)	ORIGINAL 30" OUTFALL CONTRUCTION	60" MANHOLE CONSTRUCTED OVER EXISTING OUTFALL, CONSTRUCTION OF 36" EFFLUENT AND STUB (SEE SHEET G-7)	MODIFICATION OF 60" MANHOLE TO CURRENT CONFIGURATION, CONTINUATION OF EFFLUENT LINE (SEE SHEET C-6)	N/A	N/A	N/A	N/A	ADDITION OF SAMPLE PUMPS AND ANALYZER
75 CHEMICAL (BISULFITE) STORAGE & FEED	N/A	N/A	N/A	N/A	N/A	N/A	N/A	BISULFITE STORAGE AND PUMPING SYSTEM ADDED BY PLANT STAFF
85 DIGESTER GAS BURNER	ORIGINAL CONSTRUCTION NOT IN PLAN SET (SUPERSEDED)	DEMOLITION OF EXISTING FACILITY; CONSTRUCTION OF NEW RELOCATED FACILITY (SUPERSEDED)	N/A	N/A	DEMOLITION OF EXISTING FACILITY; CONSTRUCTION OF NEW RELOCATED FACILITY (SUPERSEDED)	N/A	DEMOLITION OF EXISTING FACILITY; CONSTRUCTION OF CURRENT FACILITY	N/A
91 EFFLUENT PUMP STATION	N/A	N/A	ORIGINAL CONSTRUCTION (FOR EFFLUENT LINE HIGH POINT, SEE SHEET C-20)	N/A	N/A	N/A	N/A	ADDITION OF SODIUM BISULFITE FEED SYSTEM, SAMPLER, AND CHLORINE ANALYZERS IN ELECTRICAL/GENERATOR ROOM

GENERAL DEMOLITION NOTES:

1. SEE SECTION 02072 FOR DEMOLITION, CUTTING AND PATCHING REQUIREMENTS.
2. REFER TO SHEETS 00G014 THROUGH 00G017 FOR CONSTRUCTION SEQUENCING.
3. ONLY EXISTING DRAWING SETS THAT ARE USED AS REFERENCES FOR THIS PROJECT ARE LISTED IN MATRIX. THESE DRAWING SETS ARE AVAILABLE IN PDF FORMAT FROM THE PINOLE WPCP STAFF.
4. WORK DONE BY WPCP STAFF IS BASED ON HDR STAFF OBSERVATION AND CONVERSATIONS WITH PLANT OPERATIONS STAFF. THIS LIST IS NOT COMPREHENSIVE. CONTACT PLANT STAFF FOR MORE INFORMATION.

FILE: 215786-00D001.dwg
DATE: Oct 06, 2015-3:54:17pm, rsnider

HDR Engineering, Inc.

ISSUE	DATE	DESCRIPTION
A	JUNE 2015	ISSUED FOR BID

PROJECT MANAGER	C. OLSON
DESIGNED	M. PERINPANAYAGAM
DESIGNED	
CHECKED	C. OLSON
DRAWN	M. FOYLE
DATE	JUNE 30, 2015
PROJECT NUMBER	215786

REGISTERED PROFESSIONAL ENGINEER
CRAIG A. OLSON
NO. 39819
EXP. 12/31/15
CIVIL
STATE OF CALIFORNIA
06-30-15

CITY OF PINOLE CALIFORNIA 1903

PINOLE/HERCULES
WATER POLLUTION
CONTROL PLANT UPGRADE
CLIENT PN

DEMOLITION

GENERAL NOTES

0 1" 2"

FILENAME	215786-00D001
SCALE	AS NOTED

SHEET
00D001

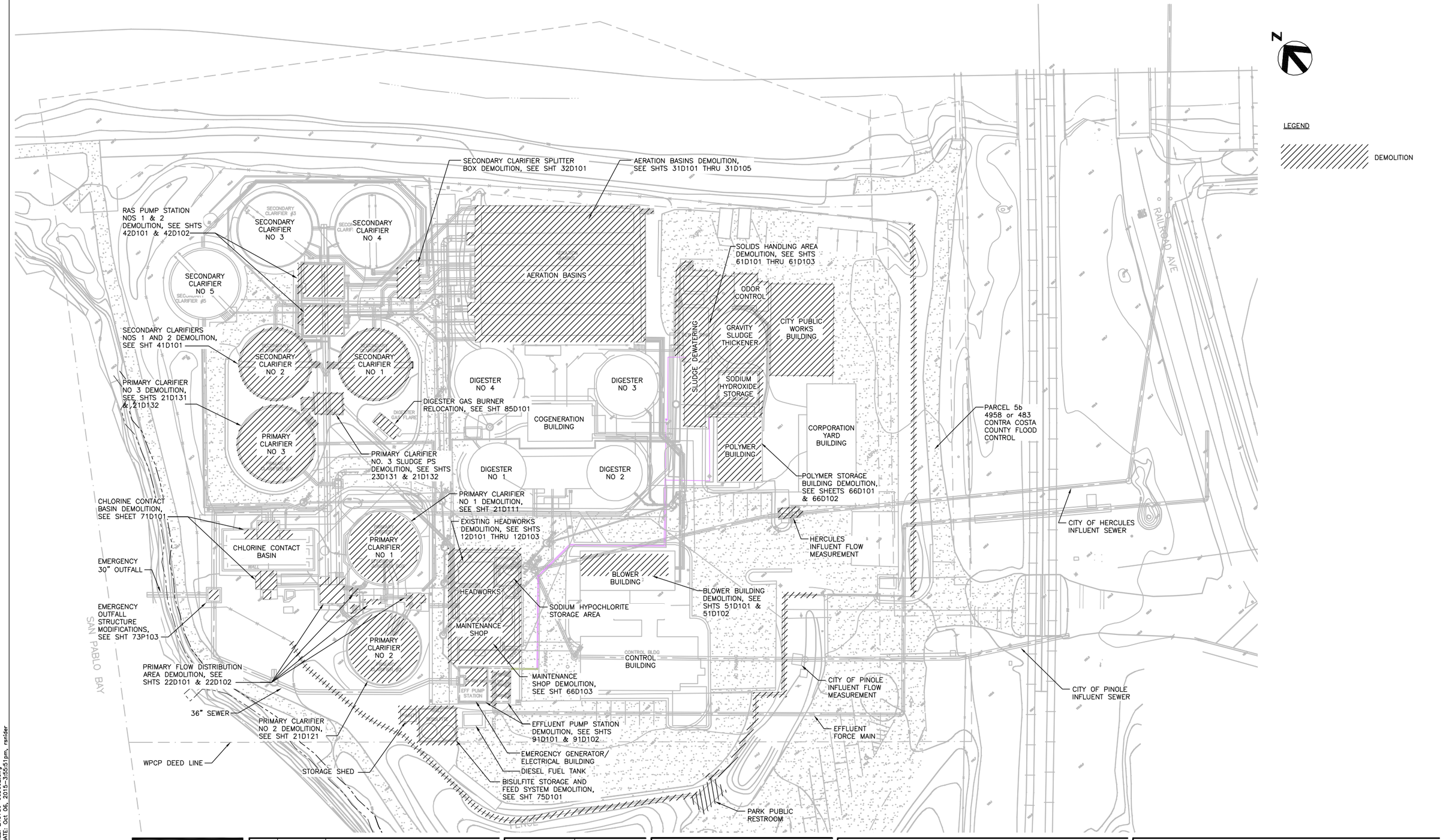

FILE: 215786-00D002.dwg
DATE: Oct 06, 2015-3:55:51pm, rainder

HDR Engineering, Inc.

ISSUE	DATE	DESCRIPTION
A	JUNE 2015	ISSUED FOR BID

PROJECT MANAGER	C. OLSON
DESIGNED	M. PERINPANAYAGAM
DESIGNED	
CHECKED	C. OLSON
DRAWN	P. VANMEURS
DATE	JUNE 30, 2015
PROJECT NUMBER	215786

REGISTERED PROFESSIONAL ENGINEER
CRAIG A. OLSON
NO. 39819
EXP. 12/31/15
CIVIL
STATE OF CALIFORNIA
06-30-15

CITY OF PINOLE CALIFORNIA 1903

PINOLE/HERCULES
WATER POLLUTION
CONTROL PLANT UPGRADE
CLIENT PN

DEMOLITION

OVERALL SITE KEY PLAN

0 1" 2"

FILENAME	215786-00D002
SCALE	1" = 30'

SHEET
00D002

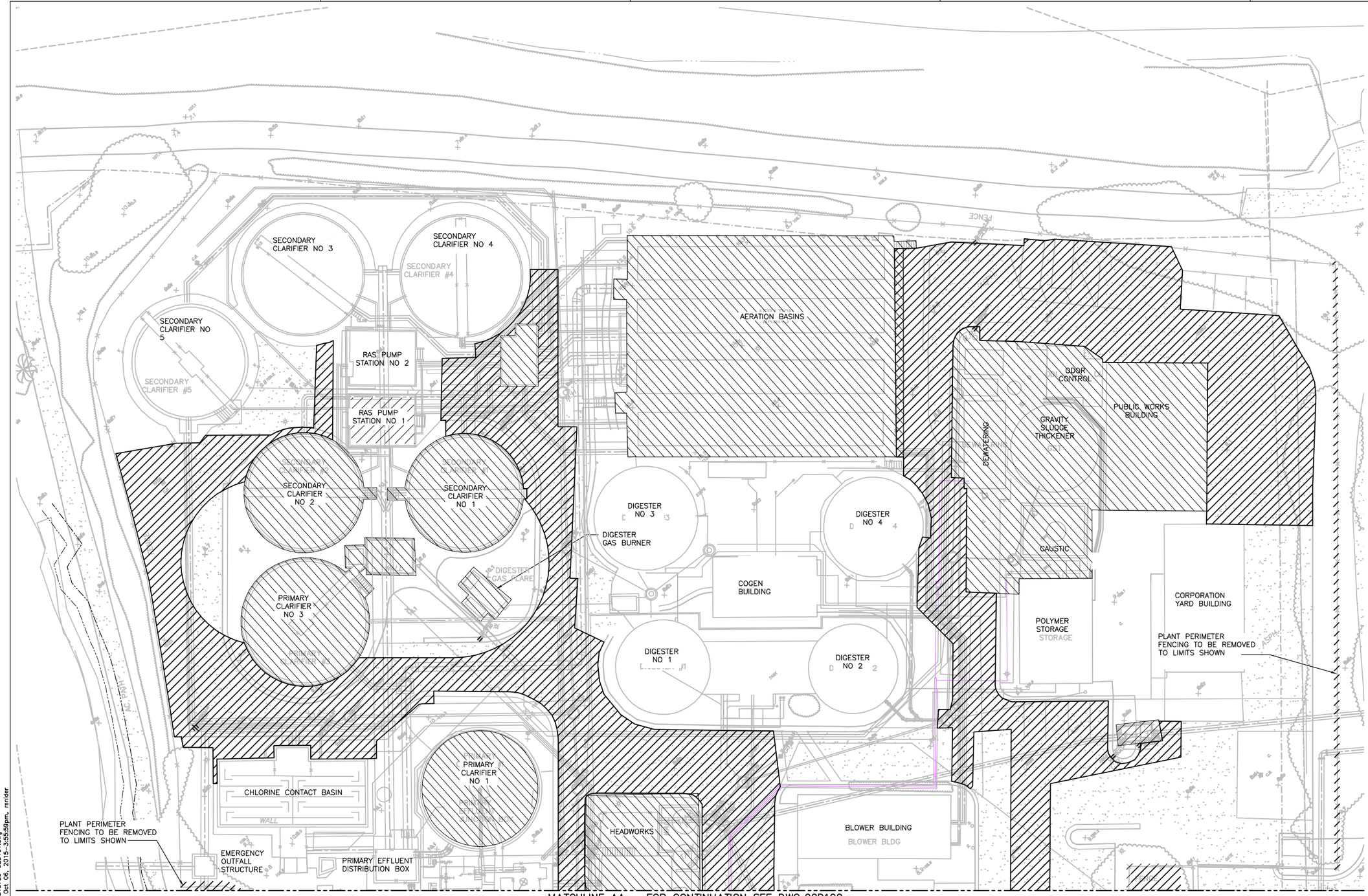

MATCHLINE AA – FOR CONTINUATION SEE DWG 02D102

FILE: 215786-02D101.dwg
DATE: Oct 06, 2015-3:55:59pm, rsnider

HDR Engineering, Inc.

ISSUE	DATE	DESCRIPTION
A	JUNE 2015	ISSUED FOR BID

PROJECT MANAGER	C. OLSON
DESIGNED	M. PERINPANAYAGAM
DESIGNED	
CHECKED	C. OLSON
DRAWN	P. VAN MEURS
DATE	JUNE 30, 2015
PROJECT NUMBER	215786

REGISTERED PROFESSIONAL ENGINEER
CRAIG A. OLSON
NO. 39819
EXP. 12/31/15
CIVIL
STATE OF CALIFORNIA
06-30-15

CITY OF PINOLE CALIFORNIA 1903

PINOLE/HERCULES
WATER POLLUTION
CONTROL PLANT UPGRADE
CLIENT PN

DEMOLITION

PAVING AND GRADING PLAN NORTH PLANT

0 1" 2"

FILENAME	215786-02D101
SCALE	1"=20'

SHEET **02D101**

MATCHLINE AA – FOR CONTINUATION SEE SHT 02D101

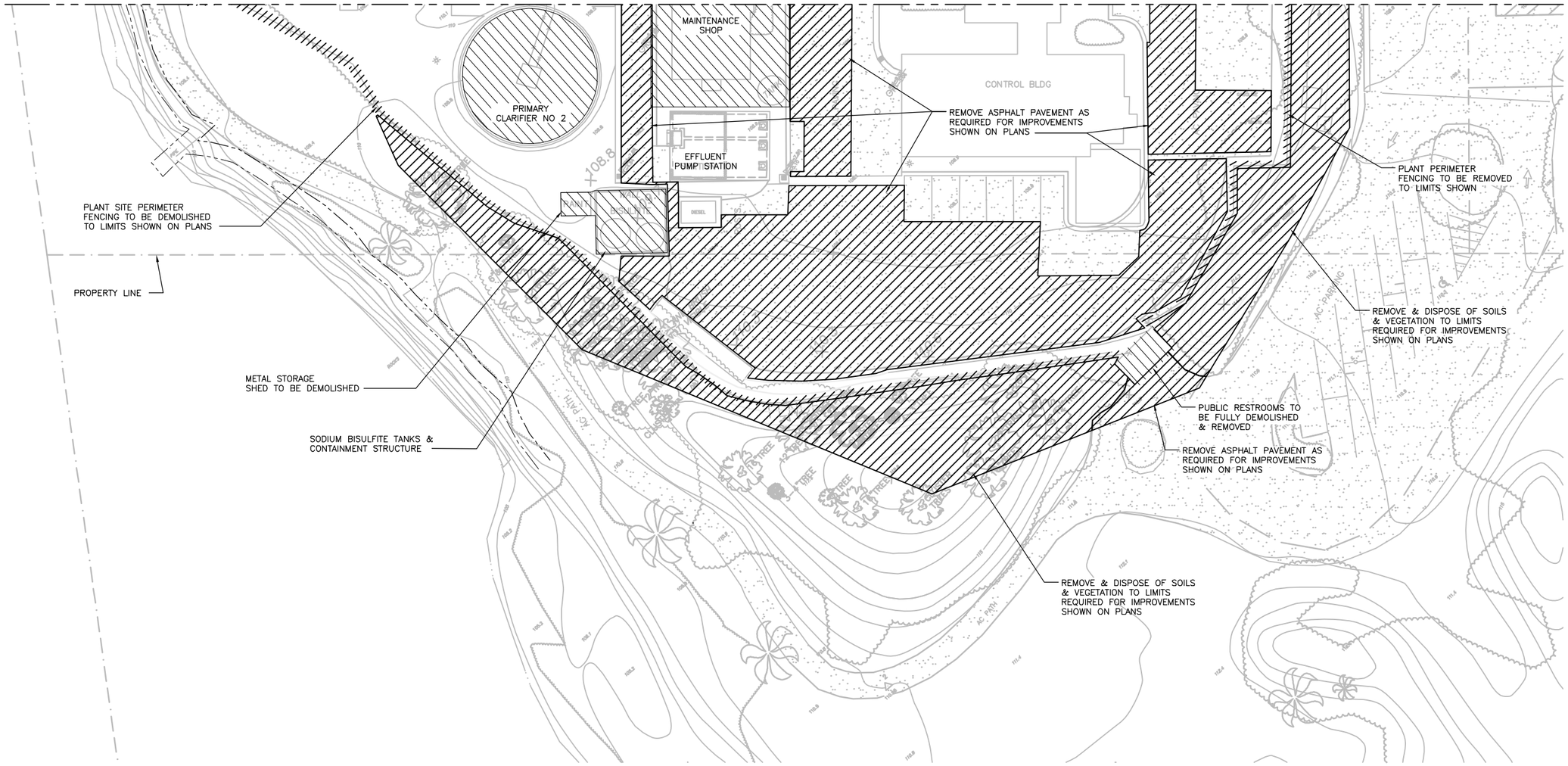

FILE: 215786-02D102.dwg
DATE: Oct 06, 2015-3:56:07pm, rsnider

HDR Engineering, Inc.

ISSUE	DATE	DESCRIPTION
A	JUNE 2015	ISSUED FOR BID

PROJECT MANAGER	C. OLSON
DESIGNED	M. PERINPANAYAGAM
DESIGNED	
CHECKED	C. OLSON
DRAWN	P. VAN MEURS
DATE	JUNE 30, 2015
PROJECT NUMBER	215786

REGISTERED PROFESSIONAL ENGINEER
CRAIG A. OLSON
NO. 39819
EXP. 12/31/15
CIVIL
STATE OF CALIFORNIA
06-30-15

CITY OF PINOLE CALIFORNIA 1903

PINOLE/HERCULES
WATER POLLUTION
CONTROL PLANT UPGRADE
CLIENT PN

DEMOLITION

PAVING AND GRADING PLAN SOUTH PLANT

0 1" 2"

FILENAME	215786-02D102
SCALE	1"=20'

SHEET **02D102**

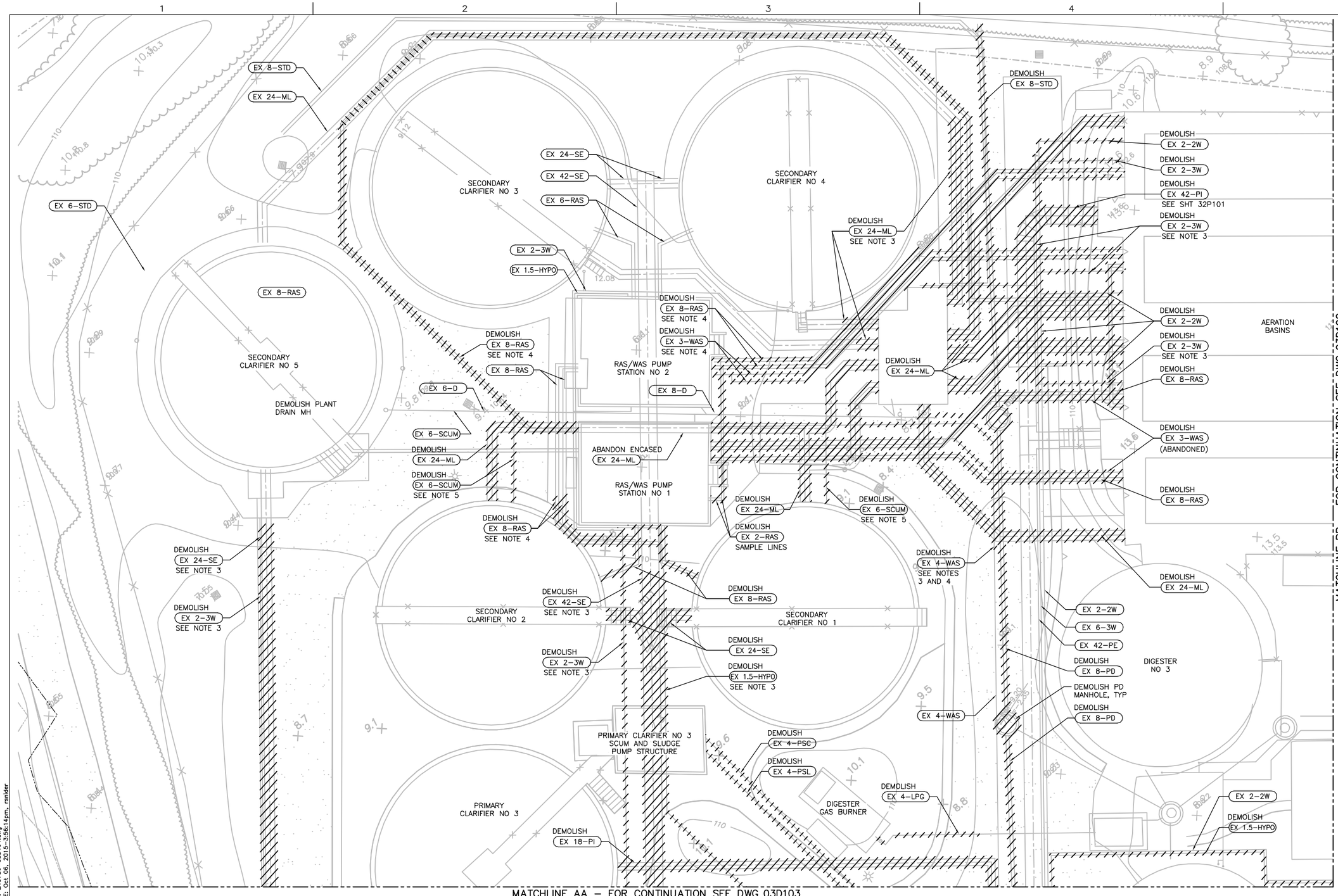

GENERAL NOTES:

1. EXISTING SITE CONDITION MAY DIFFER FROM RECORD DRAWINGS. CONTRACTOR TO FIELD VERIFY EXISTING PIPE SIZE, ELEVATION, AND MATERIAL.
2. DEMOLITION OF STRUCTURES ARE NOT SHOWN. REFER TO SHEETS 02D101 AND 02D102 FOR STRUCTURE DEMOLITION.
3. DEMOLISH PIPELINE UP TO LIMITS INDICATED. RE–CONNECT PIPELINE AS SHOWN ON CIVIL YARD PIPING PLANS.
4. DEMOLISH PIPELINE AND RE–CONNECT OR PLUG PIPELINE AS SHOWN ON SERIES 42 SHEETS.
5. PLUG DRAIN LATERAL AFTER DEMOLITION OF SCUM LINES.

AREA 1	AREA 2
AREA 3	AREA 4

FILE: 215786–03D101.dwg
DATE: Oct 06, 2015–3:56:14pm, rsnider

HDR Engineering, Inc.

ISSUE	DATE	DESCRIPTION
A	JUNE 2015	ISSUED FOR BID

PROJECT MANAGER	C. OLSON
DESIGNED	M. PERINPANAYAGAM
DESIGNED	
CHECKED	C. OLSON
DRAWN	M. FOYLE
DATE	JUNE 30, 2015
PROJECT NUMBER	215786

REGISTERED PROFESSIONAL ENGINEER CRAIG A. OLSON NO. 39819 EXP. 12/31/15 CIVIL STATE OF CALIFORNIA 06-30-15

CITY OF PINOLE CALIFORNIA 1903

PINOLE/HERCULES
WATER POLLUTION
CONTROL PLANT UPGRADE
CLIENT PN

DEMOLITION

YARD PIPING PLAN AREA 1

0 1" 2"

FILENAME	215786–03D101
SCALE	1" = 10'

SHEET 03D101

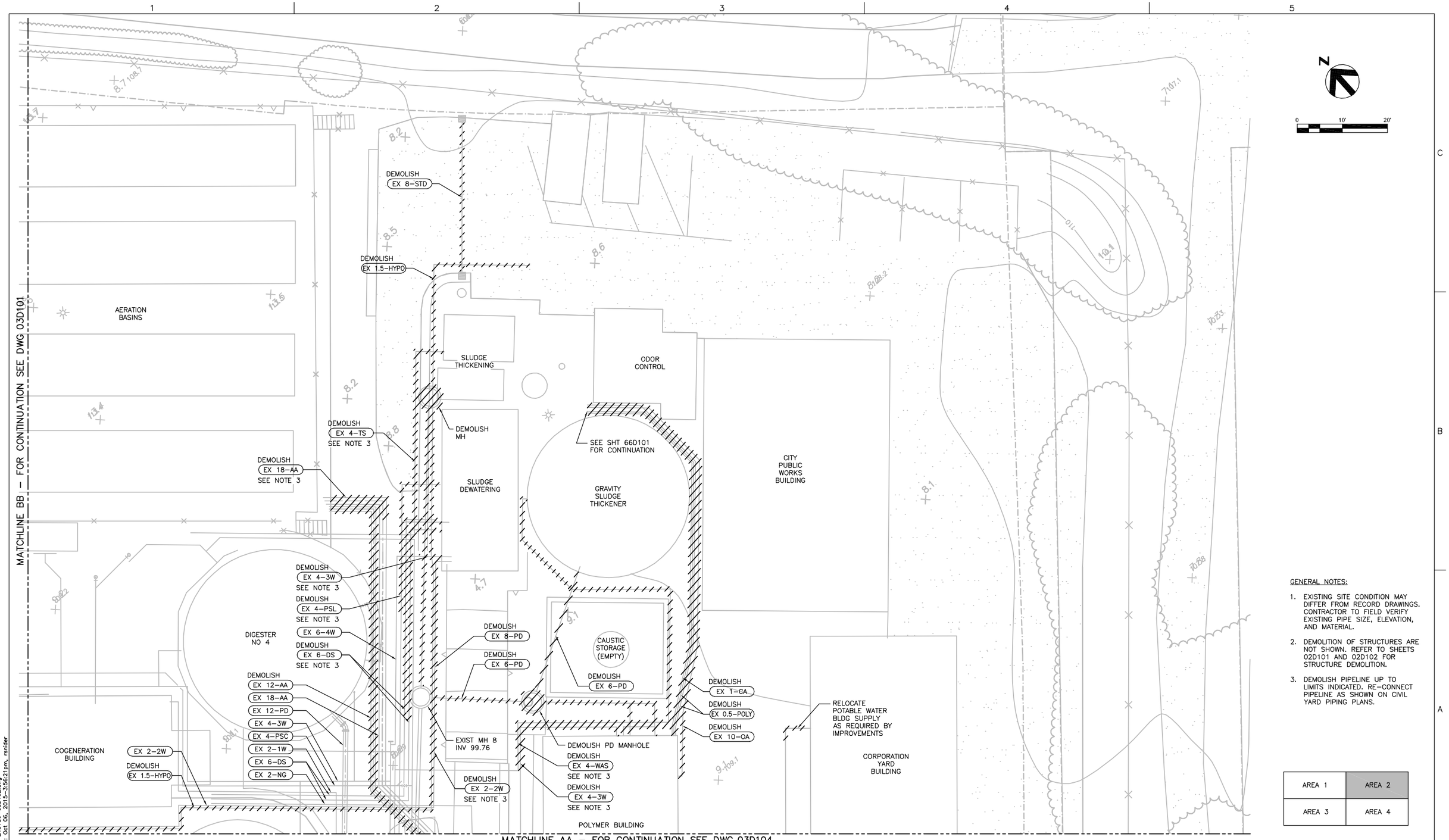

GENERAL NOTES:

1. EXISTING SITE CONDITION MAY DIFFER FROM RECORD DRAWINGS. CONTRACTOR TO FIELD VERIFY EXISTING PIPE SIZE, ELEVATION, AND MATERIAL.
2. DEMOLITION OF STRUCTURES ARE NOT SHOWN. REFER TO SHEETS 02D101 AND 02D102 FOR STRUCTURE DEMOLITION.
3. DEMOLISH PIPELINE UP TO LIMITS INDICATED. RE–CONNECT PIPELINE AS SHOWN ON CIVIL YARD PIPING PLANS.

AREA 1	AREA 2
AREA 3	AREA 4

FILE: 215786–03D102.dwg
DATE: Oct 06, 2015–3:56:21pm, rsnider

HDR Engineering, Inc.

ISSUE	DATE	DESCRIPTION
A	JUNE 2015	ISSUED FOR BID

PROJECT MANAGER	C. OLSON
DESIGNED	M. PERINPANAYAGAM
DESIGNED	
CHECKED	C. OLSON
DRAWN	M. FOYLE
DATE	JUNE 30, 2015
PROJECT NUMBER	215786

REGISTERED PROFESSIONAL ENGINEER CRAIG A. OLSON NO. 39819 EXP. 12/31/15 CIVIL STATE OF CALIFORNIA

PINOLE/HERCULES WATER POLLUTION CONTROL PLANT UPGRADE CLIENT PN

DEMOLITION

YARD PIPING PLAN AREA 2

0 1" 2"

FILENAME	215786–03D102
SCALE	1" = 10'

SHEET **03D102**

MATCHLINE AA – FOR CONTINUATION SEE DWG 03C101

MATCHLINE BB – FOR CONTINUATION SEE DWG 03C104

DEMOLISH EX 24–SE

DEMOLISH EX 2–3W

DEMOLISH EX 24–PE PLUG OPENING AT MANHOLE

PRIMARY CLARIFIER NO 3

EX 42–PE

DEMOLISH EX 4–PSL SEE NOTE 3

DEMOLISH EX 4–PSC SEE NOTE 3

EX 6–3W

EX 2–2W

DEMOLISH EX 1.5–HYPO

DIGESTER NO 1

DEMOLISH EX 6–3W SEE NOTE 3

DEMOLISH EX 1.5–HYPO

DEMOLISH EX 6–PD

DEMOLISH EX 8–D SEE NOTE 3

DEMOLISH EX 8–PD

EX 4–PSC

EX 4–WAS

EX 4–PSL

DEMOLISH PD MANHOLE, TYP

DEMOLISH DI, TYP

DEMOLISH EX 8–PD

DEMOLISH EX 6–3W SEE NOTE 3

EX 4–PSL

EX 4–PSC

PRIMARY CLARIFIER NO 1

DEMOLISH EX 8–PD SEE NOTE 3

DEMOLISH EX 8–PD

DEMOLISH EX 30–IS

CHLORINE CONTACT BASINS

WALL

DEMOLISH EX 18–PI SEE NOTE 3

DEMOLISH EX 8–PD

HEADWORKS (WET WELL)

DEMOLISH SS MANHOLE

EX 30–OF OUTFALL

EMEGENCY OUTFALL STRUCTURE

EX 42–SE

PRIMARY EFFLUENT JUNCTION BOX

PRIMARY CLARIFIER DISTRIBUTION BOX

HEADWORKS (DRY WELL, ELECTRICAL ROOM, AND CHLORINATION ROOM)

DEMOLISH EX 30–PI SEE NOTE 3

DEMOLISH EX 6–PD

FOR YARD PIPING DEMOLITION IN THIS AREA, SEE 22D101

MAINTENANCE SHOP

EX 2–NG

DEMOLISH EX 2–2W SEE NOTE 3

EX 36–FE

PRIMARY CLARIFIER NO 2

DEMOLISH OR RELOCATE GAS METER, SEE NOTE 4

DEMOLISH EX 6–PD SEE NOTE 3

DEMOLISH EX 8–4W SEE NOTE 3

EFFLUENT PUMP STATION

DEMOLISH EX 24–FE SEE NOTE 3

STORAGE SHED

BISULFITE STORAGE

DIESEL TANK

N

0 10' 20'

GENERAL NOTES:

1. EXISTING SITE CONDITION MAY DIFFER FROM RECORD DRAWINGS. CONTRACTOR TO FIELD VERIFY EXISTING PIPE SIZE, ELEVATION, AND MATERIAL.
2. DEMOLITION OF STRUCTURES ARE NOT SHOWN. REFER TO SHEETS 02D101 AND 02D102 FOR STRUCTURE DEMOLITION.
3. DEMOLISH PIPELINE UP TO LIMITS INDICATED. RE–CONNECT PIPELINE AS SHOWN ON CIVIL YARD PIPING PLANS.
4. GAS METER MAY BE RELOCATED WITH APPROVAL FROM PG&E.

AREA 1	AREA 2
AREA 3	AREA 4

FILE: 215786–03D103.dwg
DATE: Oct 06, 2015–3:56:29pm, ranider

HDR Engineering, Inc.

ISSUE	DATE	DESCRIPTION
A	JUNE 2015	ISSUED FOR BID

PROJECT MANAGER	C. OLSON
DESIGNED	M. PERINPANAYAGAM
DESIGNED	
CHECKED	C. OLSON
DRAWN	M. FOYLE
DATE	JUNE 30, 2015
PROJECT NUMBER	215786

REGISTERED PROFESSIONAL ENGINEER CRAIG A. OLSON NO. 39819 EXP. 12/31/15 CIVIL STATE OF CALIFORNIA 06-30-15

CITY OF PINOLE CALIFORNIA 1903

PINOLE/HERCULES WATER POLLUTION CONTROL PLANT UPGRADE CLIENT PN

DEMOLITION

YARD PIPING PLAN AREA 3

0 1" 2"

FILENAME	215786–03D103
SCALE	1" = 10'

SHEET **03D103**

MATCHLINE AA – FOR CONTINUATION SEE DWG 03C102

MATCHLINE BB – FOR CONTINUATION SEE DWG 03C101

DEMOLISH
EX 12–AA
EX 18–AA
EX 8–PD

POLYMER BUILDING
EX 4–4W
EX 2–2W
EX 4–TS
ABANDONED
EX 6–D
ABANDONED

CORPORATION YARD BUILDING
EX 4–D
EX 2–2W

DIGESTER NO 2
EX 6–4W
EX 8–4W
EX 12–D

EX 2–2W
EX 2–NG

DEMOLISH
EX 2–NG
AS REQUIRED FOR RELOCATED GAS METER

EX 4–WAS
EX 4–PSL
EX 4–PSC

METERING STRUCTURE AND ACCESS MANHOLE TO BE DEMOLISHED

EX 24–IS
HERCULES SEWER

EX 2–NG

DEMOLISH PD MH

DEMOLISH
EX 8–PD
SEE NOTE 3

DEMOLISH
EX 24–IS
SEE NOTE 3

DEMOLISH
EX 6–STD

DEMOLISH
DI, TYP

EX 6–STD

ABANDON ENCASED
EX 24–IS

BLOWER BLDG

EX 18–AA

EX 2–NG
RELOCATE AS REQUIRED

DEMOLISH OR ABANDON
EX 12–AA

EX 2–NG

DEMOLISH
EX 24–IS
SEE NOTE 3

DIESEL TANK

DEMOLISH
EX 30–IS

DEMOLISH PD MH

ABANDON AS REQUIRED
EX 30–IS

CONTROL BLDG

DEMOLISH
EX 30–IS
SEE NOTE 3

EX 30–IS
PINOLE SEWER

EX 24–FE
FORCEMAIN TO RODEO

N

0 10' 20'

GENERAL NOTES:

1. EXISTING SITE CONDITION MAY DIFFER FROM RECORD DRAWINGS. CONTRACTOR TO FIELD VERIFY EXISTING PIPE SIZE, ELEVATION, AND MATERIAL.
2. DEMOLITION OF STRUCTURES ARE NOT SHOWN. REFER TO SHEETS 02D101 AND 02D102 FOR STRUCTURE DEMOLITION.
3. DEMOLISH PIPELINE UP TO LIMITS INDICATED. RE–CONNECT PIPELINE AS SHOWN ON CIVIL YARD PIPING PLANS.
4. EXISTING HERCULES AND PINOLE INFLUENT SEWER PIPELINES ARE ASBESTOS CONCRETE PIPE (ACP). DEMOLISH PIPES PER SECTION 15072.

AREA 1	AREA 2
AREA 3	AREA 4

FILE: 215786–03D104.dwg
DATE: Oct 06, 2015–3:56:37pm, ranider

HDR Engineering, Inc.

ISSUE	DATE	DESCRIPTION
A	JUNE 2015	ISSUED FOR BID

PROJECT MANAGER	C. OLSON
DESIGNED	M. PERINPANAYAGAM
DESIGNED	
CHECKED	C. OLSON
DRAWN	M. FOYLE
DATE	JUNE 30, 2015
PROJECT NUMBER	215786

REGISTERED PROFESSIONAL ENGINEER
CRAIG A. OLSON
NO. 39819
EXP. 12/31/15
CIVIL
STATE OF CALIFORNIA
06-30-15

CITY OF PINOLE CALIFORNIA 1903

PINOLE/HERCULES
WATER POLLUTION
CONTROL PLANT UPGRADE
CLIENT PN

DEMOLITION

YARD PIPING PLAN
AREA 4

0 1" 2"

FILENAME	215786–03D104
SCALE	1" = 10'

SHEET
03D104

NOTES:

1. NOT ALL PIPING AND EQUIPMENT IS SHOWN.
2. CONTRACTOR TO DEMOLISH ALL PIPING, EQUIPMENT, AND CONCRETE AT OR ABOVE ELEVATION 93.0. AND DEMOLISH ALL PIPING AND EQUIPMENT INSIDE STRUCTURE BELOW ELEVATION 93.0.

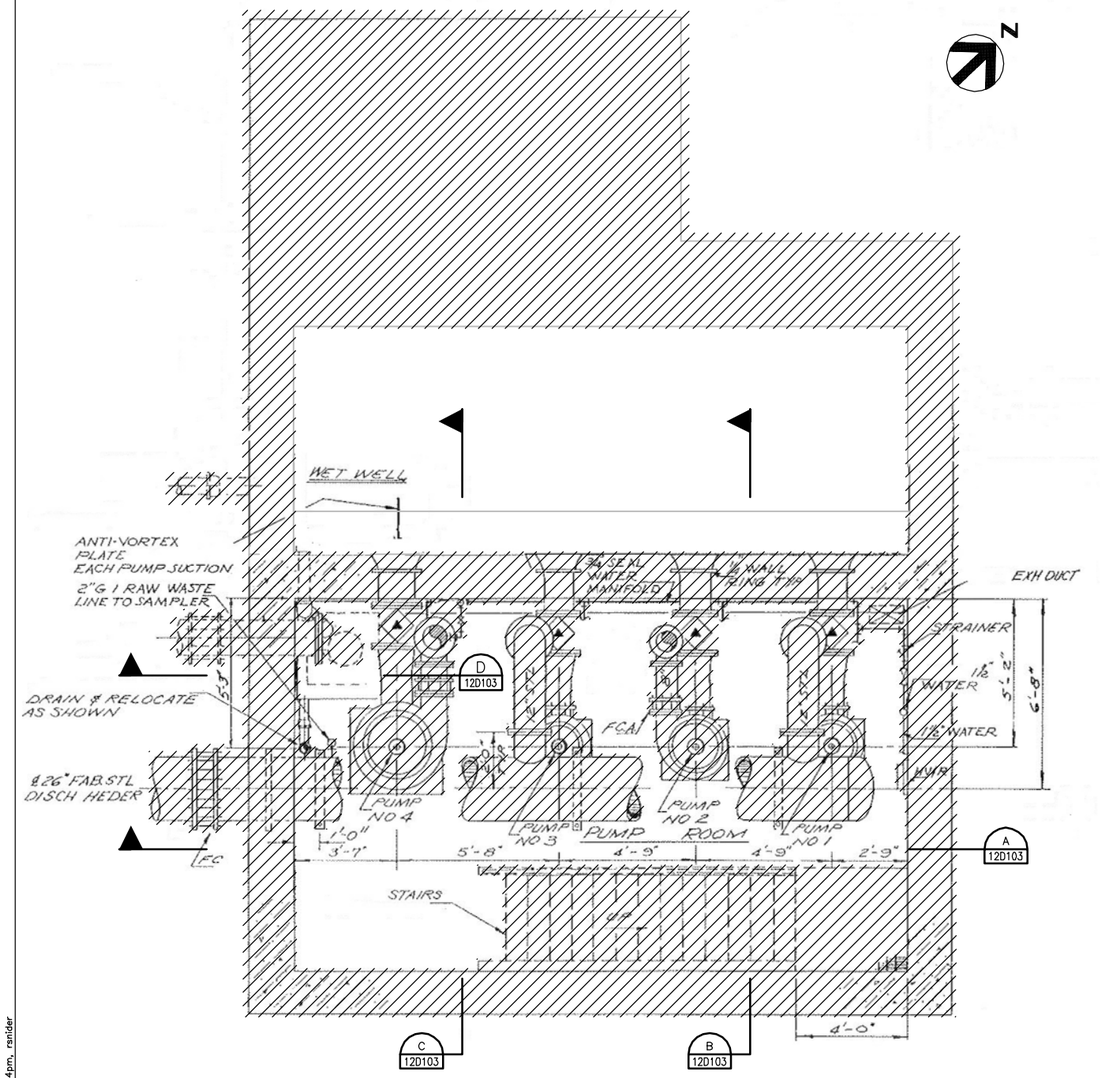

LOWER LEVEL PLAN
3/8" = 1'-0"

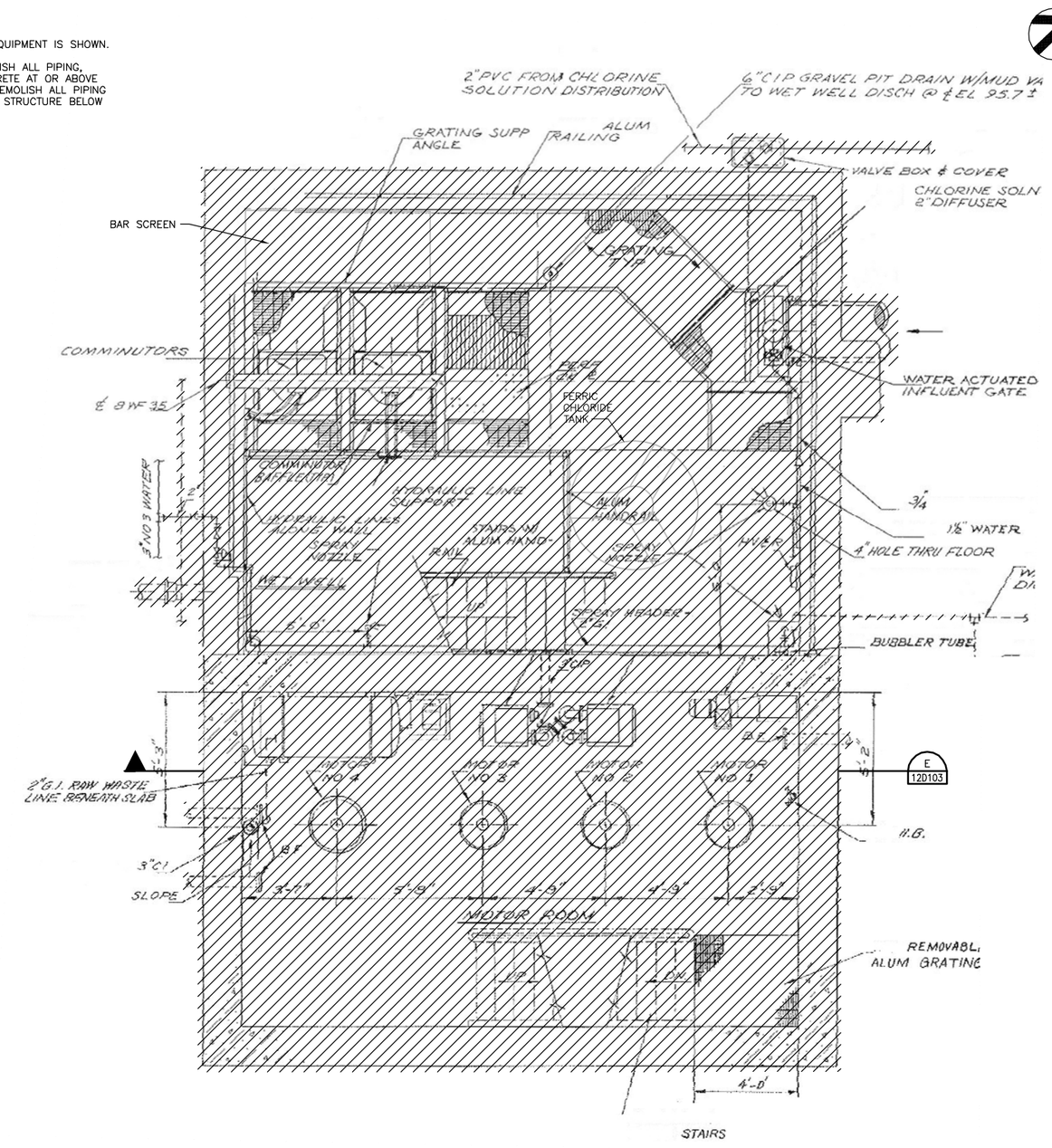

INTERMEDIATE LEVEL PLAN
3/8" = 1'-0"

FILE: 215786-12D101.dwg
DATE: Oct 06, 2015-3:56:44pm, rsnider

HDR
HDR Engineering, Inc.

ISSUE	DATE	DESCRIPTION
A	JUNE 2015	ISSUED FOR BID

PROJECT MANAGER	C. OLSON
DESIGNED	R. NATOLI
DESIGNED	
CHECKED	C. OLSON
DRAWN	M. FOYLE
DATE	JUNE 30, 2015
PROJECT NUMBER	215786

REGISTERED PROFESSIONAL ENGINEER
CRAIG A. OLSON
NO. 39819
EXP. 12/31/15
CIVIL
STATE OF CALIFORNIA
06-30-15

CITY OF PINOLE CALIFORNIA 1903

PINOLE/HERCULES
WATER POLLUTION
CONTROL PLANT UPGRADE
CLIENT PN

DEMOLITION

HEADWORKS
LOWER AND INTERMEDIATE LEVEL PLANS

0 1" 2"

FILENAME	215786-12D101
SCALE	AS NOTED

SHEET
12D101

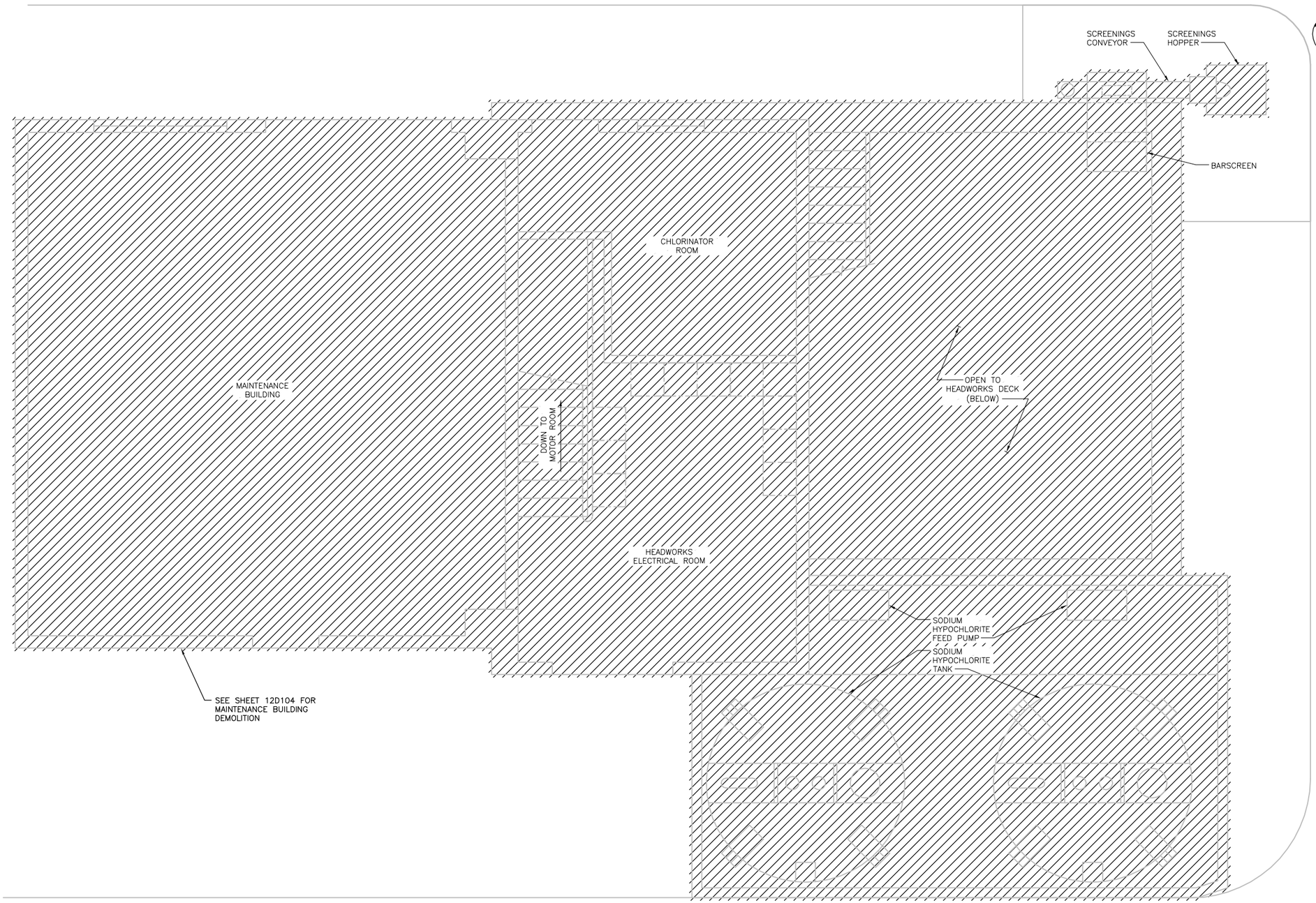

NOTES:

1. NOT ALL PIPING AND EQUIPMENT IS SHOWN.
2. CONTRACTOR TO DEMOLISH ALL PIPING, EQUIPMENT, AND CONCRETE AT OR ABOVE ELEVATION 93.0. AND DEMOLISH ALL PIPING AND EQUIPMENT INSIDE STRUCTURE BELOW ELEVATION 93.0.

UPPER LEVEL PLAN

3/8" = 1'-0"

FILE: 215786-12D102.dwg
DATE: Oct 06, 2015-3:56:55pm, rainder

HDR Engineering, Inc.

ISSUE	DATE	DESCRIPTION
A	JUNE 2015	ISSUED FOR BID

PROJECT MANAGER	C. OLSON
DESIGNED	R. NATOLI
DESIGNED	
CHECKED	C. OLSON
DRAWN	M. FOYLE
DATE	JUNE 30, 2015
PROJECT NUMBER	215786

REGISTERED PROFESSIONAL ENGINEER
CRAIG A. OLSON
NO. 39819
EXP. 12/31/15
CIVIL
STATE OF CALIFORNIA
06-30-15

CITY OF PINOLE CALIFORNIA 1903

PINOLE/HERCULES
WATER POLLUTION
CONTROL PLANT UPGRADE
CLIENT PN

DEMOLITION

HEADWORKS
UPPER LEVEL PLAN

0 1" 2"

FILENAME	215786-12D102
SCALE	AS NOTED

SHEET
12D102

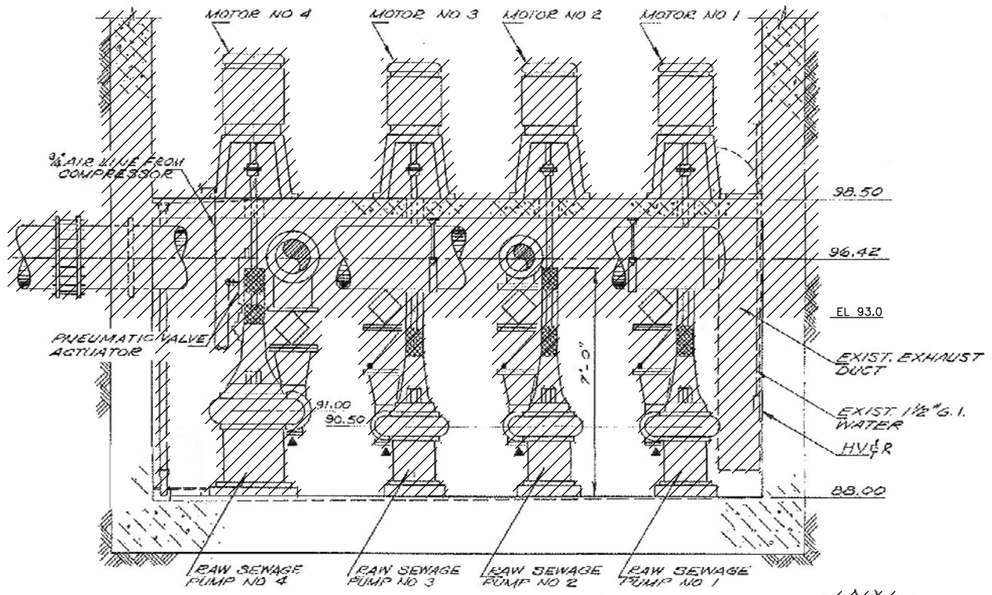

SECTION
3/8" = 1'-0"
A 12D101

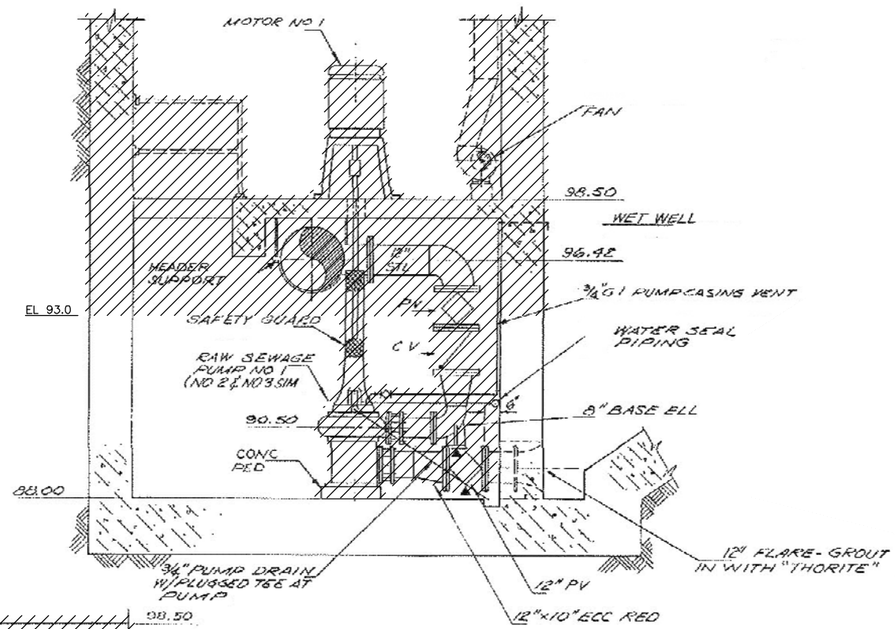

NOTE: DRAIN, VENT & WATER SEAL PIPING TYPICAL PUMPS NO 1, 2, 3 & 4

SECTION
3/8" = 1'-0"
B 12D101

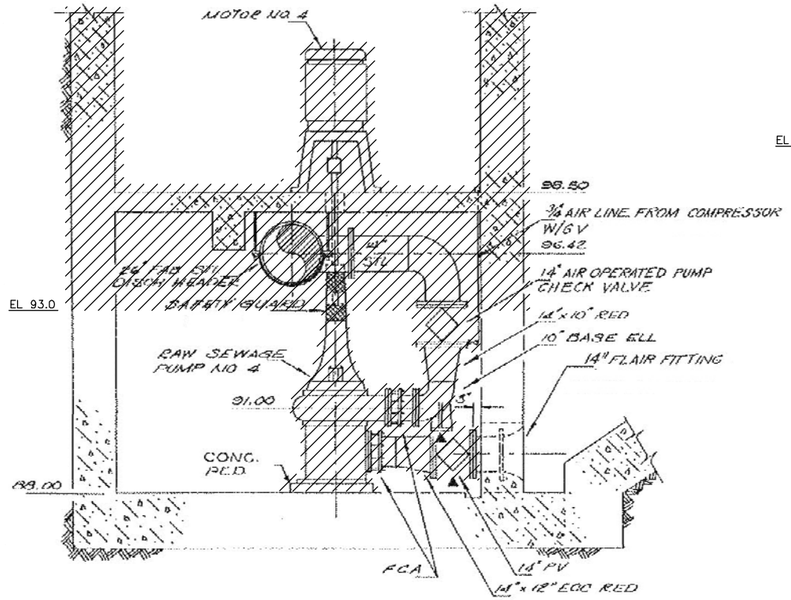

SECTION
3/8" = 1'-0"
C 12D101

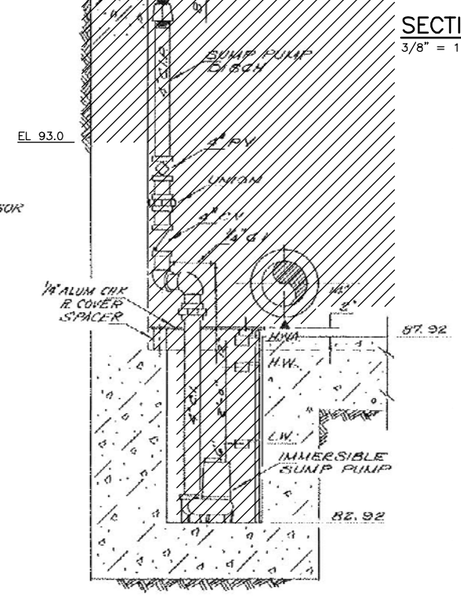

SECTION
3/8" = 1'-0"
D 12D101

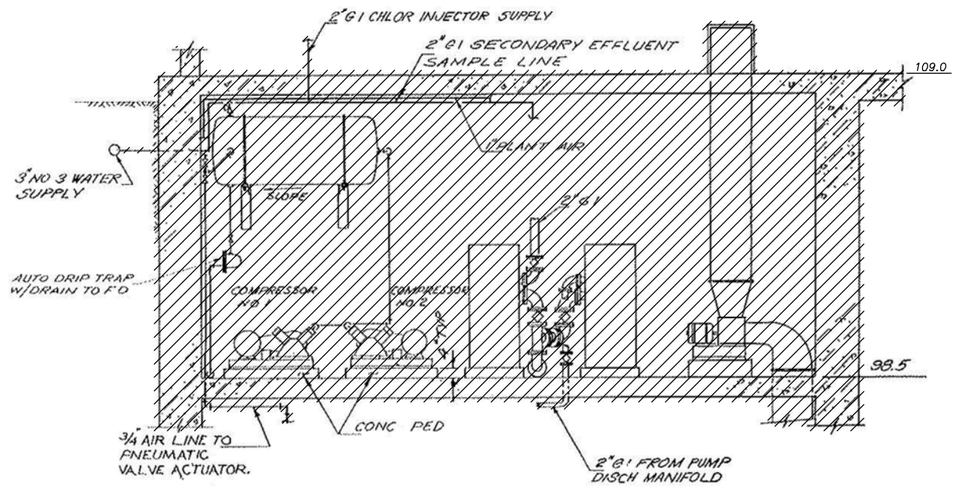

SECTION
3/8" = 1'-0"
E 12D101

NOTES:

1. NOT ALL PIPING AND EQUIPMENT IS SHOWN.
2. CONTRACTOR TO DEMOLISH ALL PIPING, EQUIPMENT, AND CONCRETE AT OR ABOVE ELEVATION 93.0. AND DEMOLISH ALL PIPING AND EQUIPMENT INSIDE STRUCTURE BELOW ELEVATION 93.0.

FILE: 215786-12D103.dwg
DATE: Oct 06, 2015-3:57:01pm, rsnider

HDR Engineering, Inc.

ISSUE	DATE	DESCRIPTION
A	JUNE 2015	ISSUED FOR BID

PROJECT MANAGER	C. OLSON
DESIGNED	R. NATOLI
DESIGNED	
CHECKED	C. OLSON
DRAWN	M. FOYLE
DATE	JUNE 30, 2015
PROJECT NUMBER	215786

REGISTERED PROFESSIONAL ENGINEER
CRAIG A. OLSON
NO. 39819
EXP. 12/31/15
CIVIL
STATE OF CALIFORNIA
06-30-15

CITY OF PINOLE CALIFORNIA 1903

PINOLE/HERCULES
WATER POLLUTION
CONTROL PLANT UPGRADE
CLIENT PN

DEMOLITION

HEADWORKS SECTIONS

0 1" 2"

FILENAME	215786-12D103
SCALE	AS NOTED

SHEET 12D103

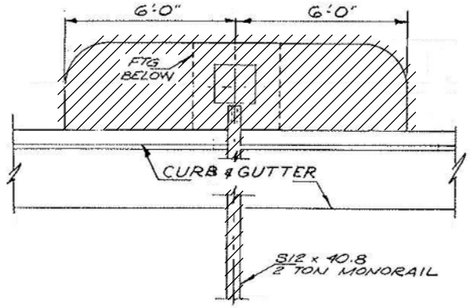

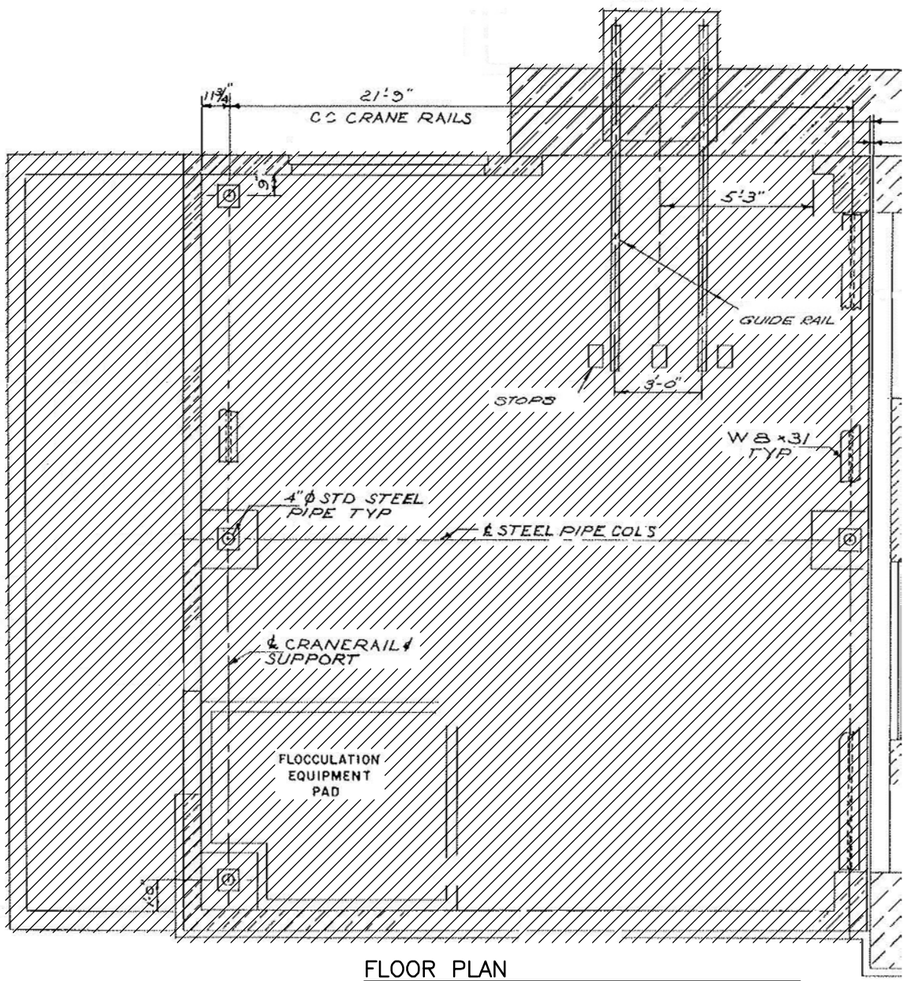

FLOOR PLAN

3/8" = 1'-0"



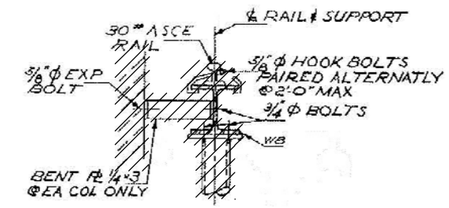

CRANE RAIL ATTACHEMENT DETAIL

NTS

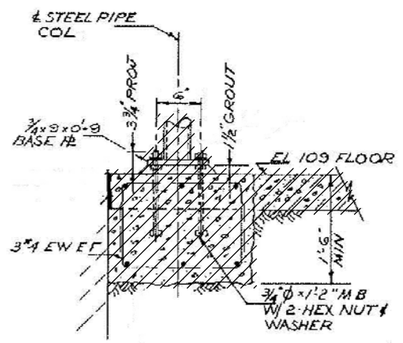

CRANE COLUMN FOOTING DETAIL

NTS

FILE: 215786-12D104.dwg
DATE: Oct 06, 2015-3:57:09pm, ranider

HDR Engineering, Inc.

ISSUE	DATE	DESCRIPTION
A	JUNE 2015	ISSUED FOR BID

PROJECT MANAGER	C. OLSON
DESIGNED	C. OLSON
DESIGNED	
CHECKED	C. OLSON
DRAWN	R. SNIDER
DATE	JUNE 30, 2015
PROJECT NUMBER	215786

REGISTERED PROFESSIONAL ENGINEER
CRAIG A. OLSON
NO. 39819
EXP. 12/31/15
CIVIL
STATE OF CALIFORNIA
06-30-15

CITY OF PINOLE CALIFORNIA 1903

PINOLE/HERCULES
WATER POLLUTION
CONTROL PLANT UPGRADE
CLIENT PN

DEMOLITION

MAINTENANCE BUILDING
PLAN, PHOTO, AND DETAILS

0 1" 2"

FILENAME	215786-12D104
SCALE	AS NOTED

SHEET
12D104

PLAN
1/8" = 1'-0"

NOTES:

1. THIS PLAN IS FOR ORIENTATION PURPOSES. NOT ALL PIPING AND EQUIPMENT IS SHOWN. MORE DETAILED WORK IS SHOWN ON SUBSEQUENT SERIES 21 DEMOLITION SHEETS.
2. DEMOLITION WORK FOR AREAS OTHER THAN SERIES 21 IS NOT REFLECTED ON THIS SHEET. SEE SHEETS 00D002, 03D101 AND 03D103 FOR MORE INFORMATION.
3. DEMOLISH PIPELINE UP TO LIMITS INDICATED. RECONNECT PIPELINE AS SHOWN ON 03C101.
4. DEMOLISH PIPELINE IN VERTICAL AT PRIMARY CLARIFIER DISTRIBUTION BOX AS INDICATED ON SHEET 22D102. RECONNECT AS INDICATED ON SHEET 22P102.

FILE: 215786–21D101.dwg
DATE: Oct 06, 2015–3:57:19pm, ranider

HDR Engineering, Inc.

ISSUE	DATE	DESCRIPTION
A	JUNE 2015	ISSUED FOR BID

PROJECT MANAGER	C. OLSON
DESIGNED	T. KONTONICKAS
DESIGNED	
CHECKED	C. OLSON
DRAWN	M. FOYLE
DATE	JUNE 30, 2015
PROJECT NUMBER	215786

REGISTERED PROFESSIONAL ENGINEER CRAIG A. OLSON NO. 39819 EXP. 12/31/15 CIVIL STATE OF CALIFORNIA 06-30-15

CITY OF PINOLE CALIFORNIA 1903

PINOLE/HERCULES WATER POLLUTION CONTROL PLANT UPGRADE CLIENT PN

DEMOLITION

PRIMARY CLARIFIERS SITE KEY PLAN

0 1" 2"

FILENAME	215786–21D101
SCALE	AS NOTED

SHEET 21D101

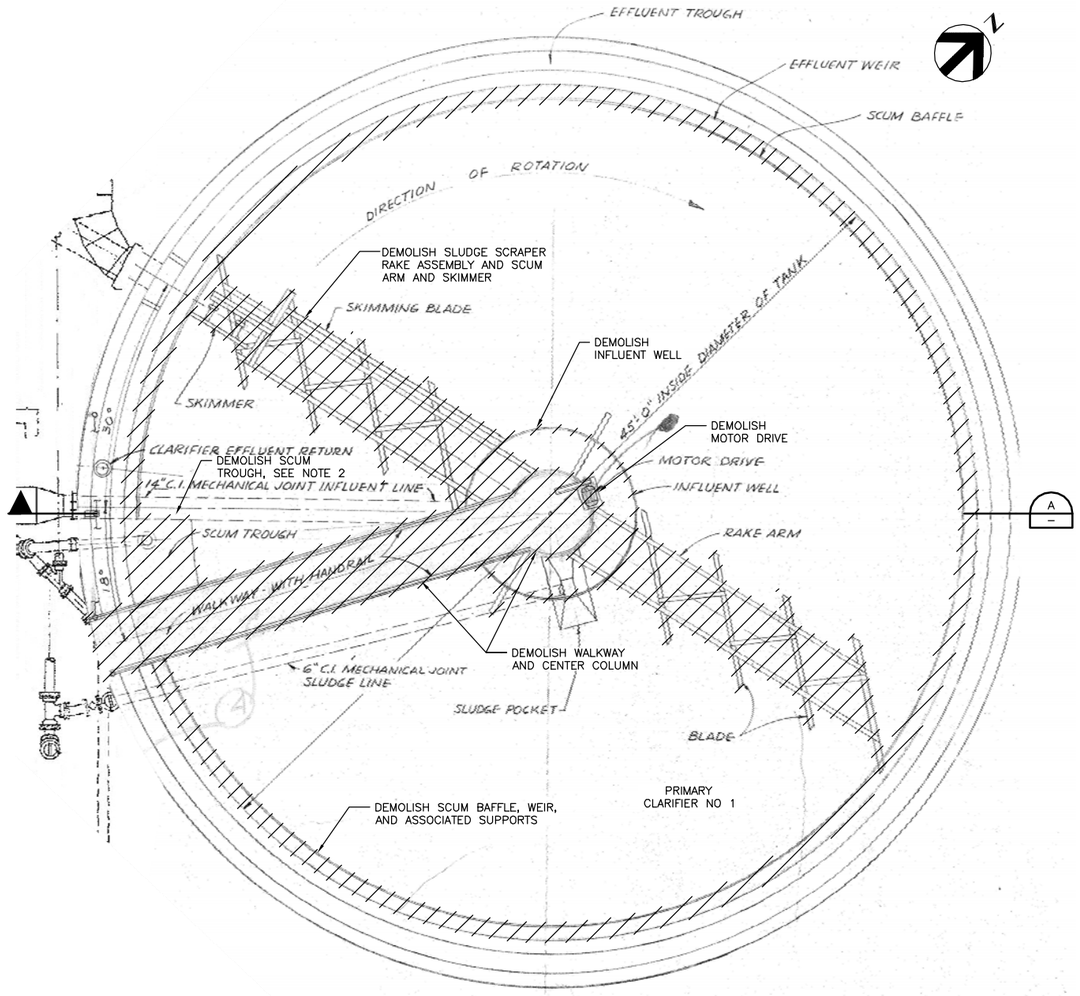

PLAN
1/4" = 1'-0"

NOTES:

1. PIPELINE SIZES AND CONFIGURATIONS SHOWN MAY BE INCORRECT. REFER TO SHEET 22D101 FOR CURRENT PIPE SIZES AND CONFIGURATIONS.
2. DEMOLISH 6" SCUM LINE BELOW TROUGH. RECONNECT AS INDICATED ON SHEET 22P102.

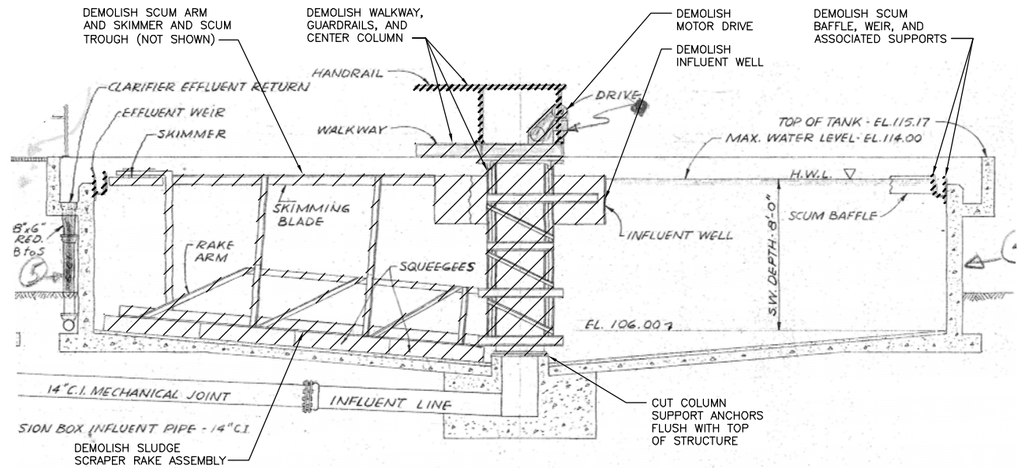

SECTION
1/4" = 1'-0"

FILE: 215786-21D102.dwg
DATE: Oct 06, 2015-3:57:26pm, ranider

HDR Engineering, Inc.

ISSUE	DATE	DESCRIPTION
A	JUNE 2015	ISSUED FOR BID

PROJECT MANAGER	C. OLSON
DESIGNED	T. KONTONICKAS
DESIGNED	
CHECKED	C. OLSON
DRAWN	M. FOYLE
DATE	JUNE 30, 2015
PROJECT NUMBER	215786

REGISTERED PROFESSIONAL ENGINEER CRAIG A. OLSON NO. 39819 EXP. 12/31/15 CIVIL STATE OF CALIFORNIA 06-30-15

CITY OF PINOLE CALIFORNIA 1903

PINOLE/HERCULES
WATER POLLUTION
CONTROL PLANT UPGRADE
CLIENT PN

DEMOLITION

PRIMARY CLARIFIER NO 1
PLAN AND SECTION

0 1" 2"

FILENAME	215786-21D102
SCALE	AS NOTED

SHEET
21D102

NOTES:

1. PIPELINE SIZES AND CONFIGURATIONS SHOWN MAY BE INCORRECT. REFER TO SHEET 22D101 FOR CURRENT PIPE SIZES AND CONFIGURATIONS.
2. DEMOLISH 6" SCUM LINE BELOW TROUGH. RECONNECT AS INDICATED ON SHEET 22P103.

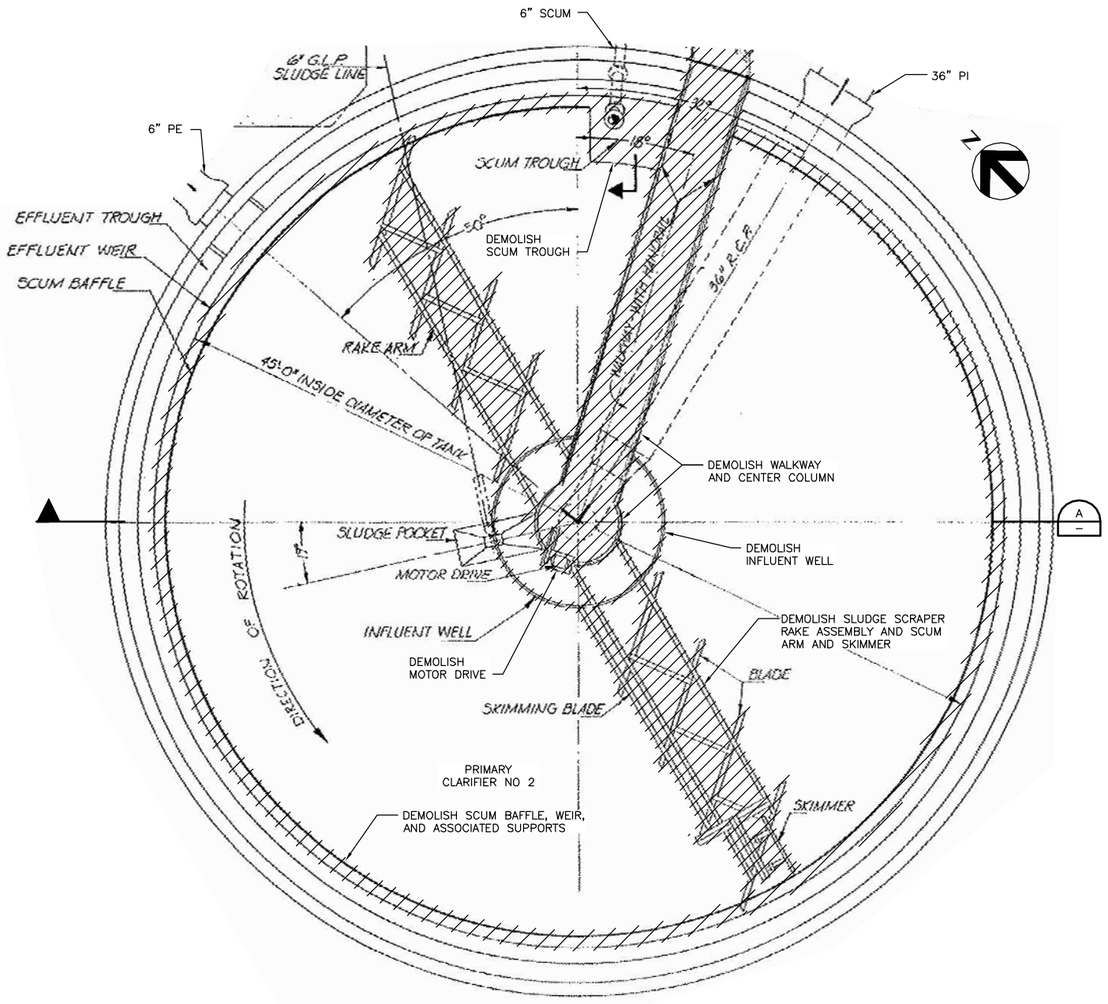

PLAN
1/4" = 1'-0"

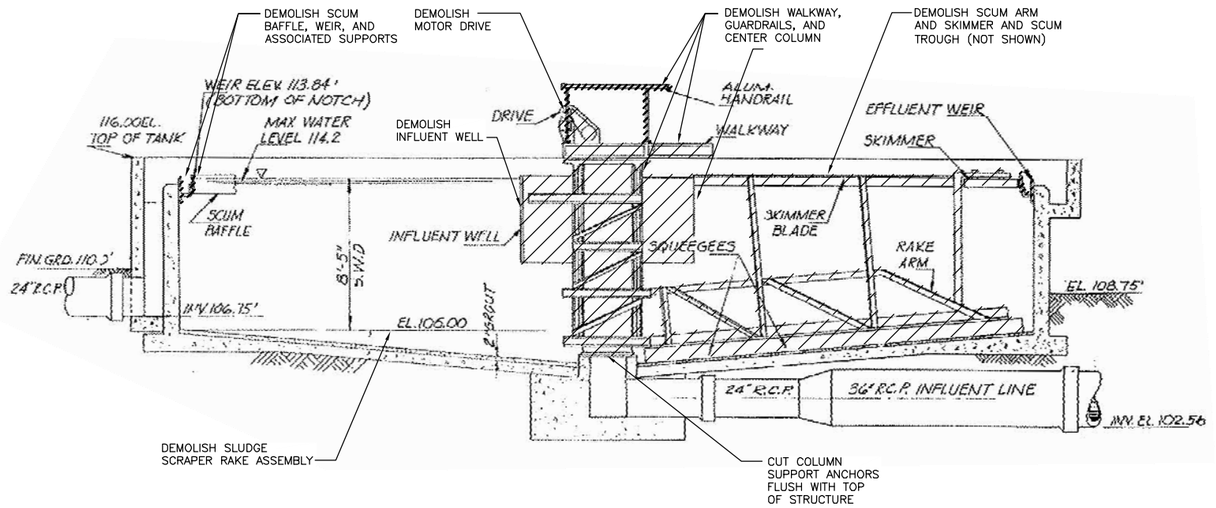

SECTION
1/4" = 1'-0"

FILE: 215786-21D103.dwg
DATE: Oct 06, 2015-3:57:36pm, ranider

HDR Engineering, Inc.

ISSUE	DATE	DESCRIPTION
A	JUNE 2015	ISSUED FOR BID

PROJECT MANAGER	C. OLSON
DESIGNED	T. KONTONICKAS
DESIGNED	
CHECKED	C. OLSON
DRAWN	M. FOYLE
DATE	JUNE 30, 2015
PROJECT NUMBER	215786

REGISTERED PROFESSIONAL ENGINEER CRAIG A. OLSON NO. 39819 EXP. 12/31/15 CIVIL STATE OF CALIFORNIA 06-30-15

CITY OF PINOLE CALIFORNIA 1903

PINOLE/HERCULES
WATER POLLUTION
CONTROL PLANT UPGRADE
CLIENT PN

DEMOLITION

PRIMARY CLARIFIER NO 2
PLAN AND SECTION

0 1" 2"

FILENAME	215786-21D103
SCALE	AS NOTED

SHEET
21D103

GENERAL NOTES:

1. DEMOLISH ENTIRE CONCRETE CLARIFIER STRUCTURE, SLUDGE AND SCUM COLLECTION MECHANISMS, CENTER WELL, INFLUENT WELL, MOTOR DRIVE AND ASSOCIATED APPURTENANCES, WALKWAY AND GUARDRAILS, BAFFLES AND WEIRS, AND ALL PIPING.

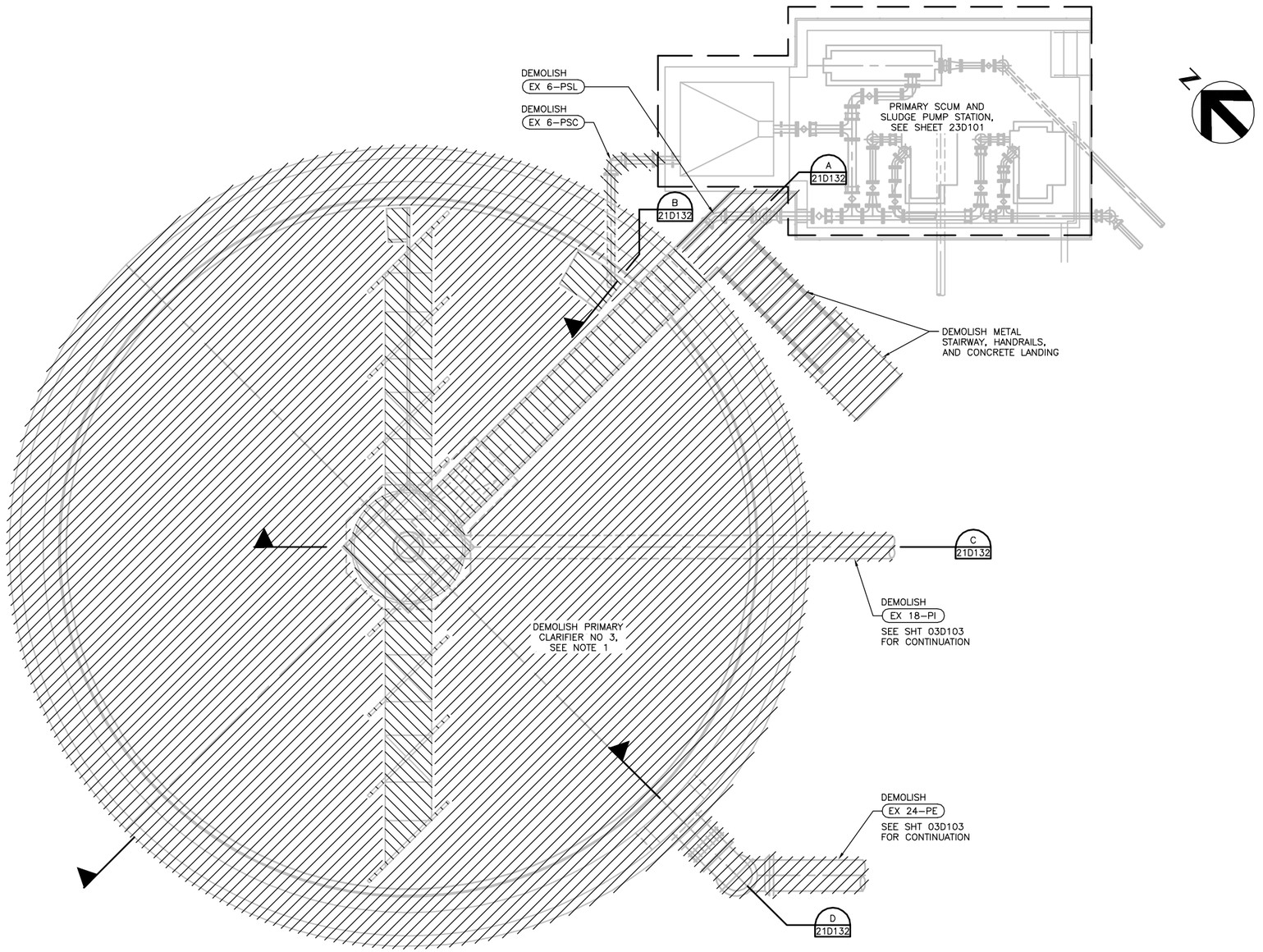

PLAN
1/4" = 1'–0"

FILE: 215786–21D104.dwg
DATE: Oct 06, 2015–3:57:45pm, rsnider

HDR Engineering, Inc.

ISSUE	DATE	DESCRIPTION
A	JUNE 2015	ISSUED FOR BID

PROJECT MANAGER	C. OLSON
DESIGNED	T. KONTONICKAS
DESIGNED	M. PERINPANAYAGAM
CHECKED	C. OLSON
DRAWN	M. FOYLE
DATE	JUNE 30, 2015
PROJECT NUMBER	215786

REGISTERED PROFESSIONAL ENGINEER
CRAIG A. OLSON
NO. 39819
EXP. 12/31/15
CIVIL
STATE OF CALIFORNIA

CITY OF PINOLE CALIFORNIA 1903

PINOLE/HERCULES
WATER POLLUTION
CONTROL PLANT UPGRADE
CLIENT PN

DEMOLITION

PRIMARY CLARIFIER NO 3
PLAN

0 1" 2"

FILENAME	215786–21D104
SCALE	AS NOTED

SHEET
21D104

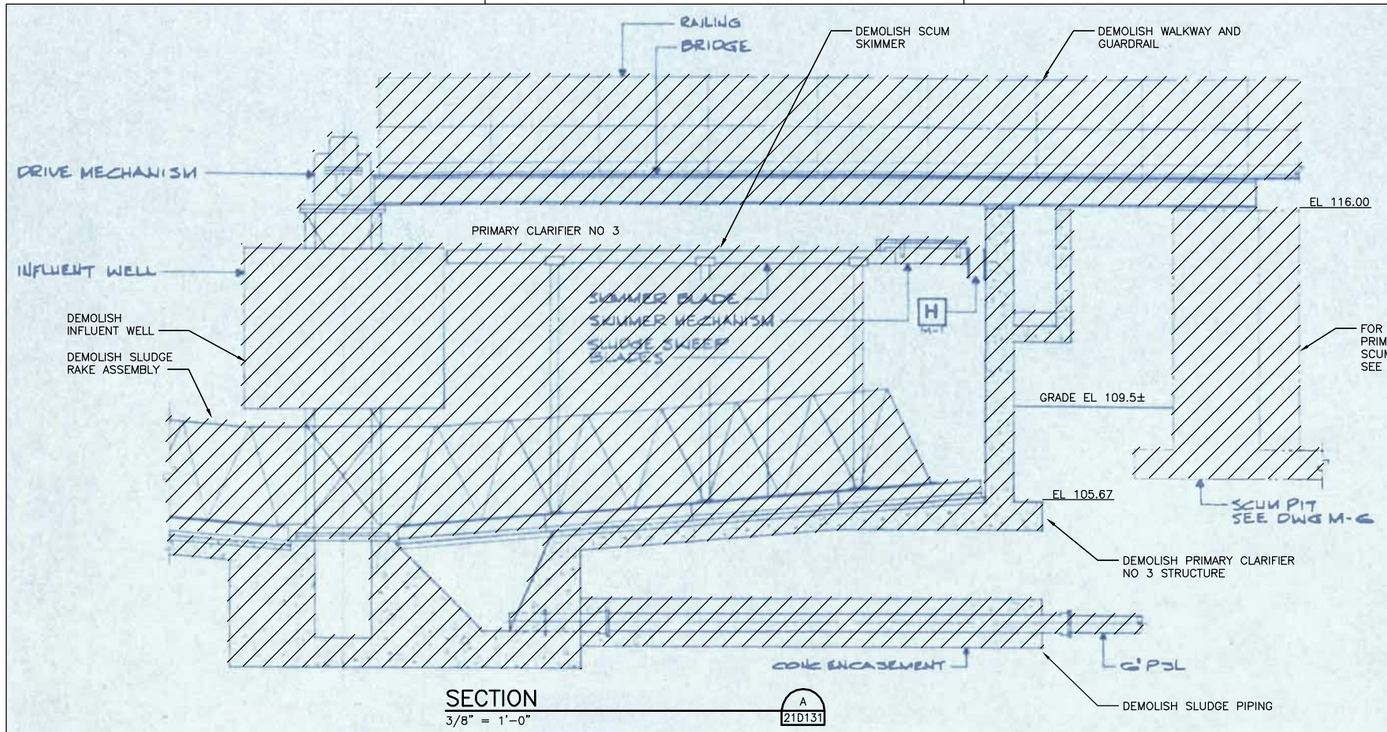

SECTION
3/8" = 1'-0"
A 21D131

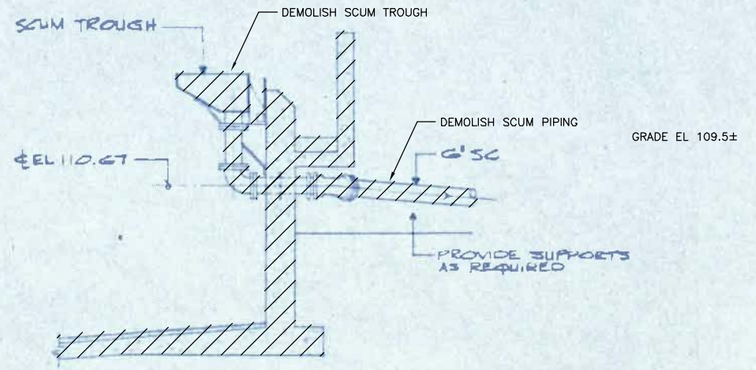

SECTION
3/8" = 1'-0"
B 21D131

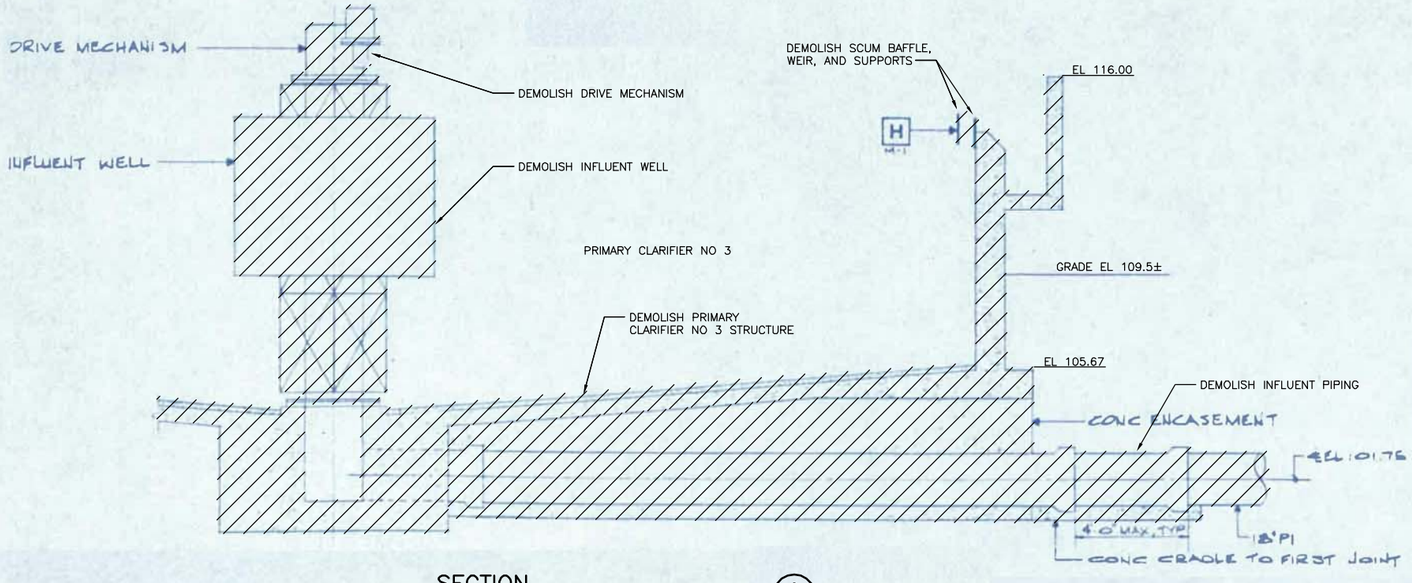

SECTION
3/8" = 1'-0"
C 21D131

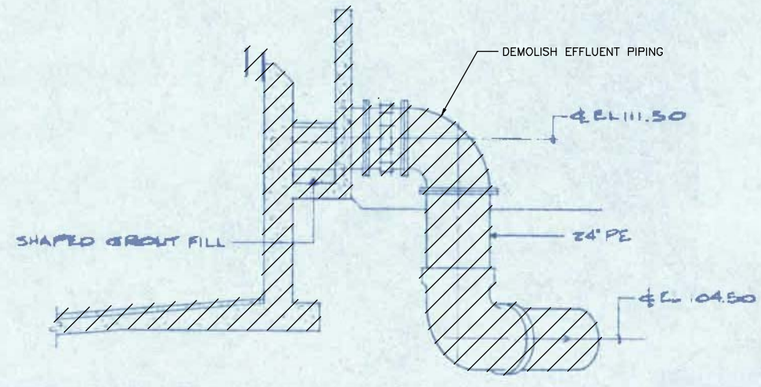

SECTION
3/8" = 1'-0"
D 21D131

FILE: 215786-21D105.dwg
DATE: Oct 06, 2015-3:57:51pm, ranider

HDR
HDR Engineering, Inc.

ISSUE	DATE	DESCRIPTION
A	JUNE 2015	ISSUED FOR BID

PROJECT MANAGER	C. OLSON
DESIGNED	M. PERINPANAYAGAM
DESIGNED	
CHECKED	C. OLSON
DRAWN	M. FOYLE
DATE	JUNE 30, 2015
PROJECT NUMBER	215786

REGISTERED PROFESSIONAL ENGINEER
CRAIG A. OLSON
NO. 39819
EXP. 12/31/15
CIVIL
STATE OF CALIFORNIA
04-30-15

CITY OF PINOLE CALIFORNIA 1903

PINOLE/HERCULES
WATER POLLUTION
CONTROL PLANT UPGRADE
CLIENT PN

DEMOLITION

PRIMARY CLARIFIER NO 3 SECTIONS

0 1" 2"

FILENAME	215786-21D105
SCALE	AS NOTED

SHEET
21D105

GENERAL NOTES:

1. DEMOLISH PIPELINE UP TO LIMITS INDICATED. RE-CONNECT PIPELINE AS SHOWN ON 03C101.
2. DEMOLISH BELOW GRADE 4" SLUDGE PIPING TO BURIED VALVE.

EX 42-SE
SEE SHT 03D103 FOR CONTINUATION

RELOCATE COMPOSITE SAMPLER FOR PRIMARY EFLUENT, SEE SHT 32P101

RELOCATE COMPOSITE SAMPLER FOR SECONADARY EFLUENT, SEE SHT 41P101

EX 42-PE
SEE SHT 03D103 FOR CONTINUATION

DEMOLISH GRATING AS SHOWN, SUPPORTS TO REMAIN

DEMOLISH SLUICE GATE AND ASSOCIATED APPURTENANCES

EX 4-PSL

EX 4-PSC

EX 24-PE

PRIMARY CLARIFIER NO 1, SEE SHT 21D102

EX 14-PI

EX 6-PSL

EX 6-PSC

EX 24-PI

DEMOLISH GRATING AS SHOWN, SUPPORTS TO REMAIN

EX 18-PI

EX 42-SE

PRIMARY EFFLUENT JUNCTION BOX

DEMOLISH STEEL PRIMARY CLARIFIER NO 3 DIVERSION BOX

A
22D102

DEMOLISH
EX 4-PSL
SEE NOTE 2

SCUM PUMP PIT

EX 6-PSC

SCUM BOX 1

PRIMARY CLARIFIER DISTRIBUTION BOX

DEMOLISH ADJUSTABLE WEIR AND ASSOCIATED APPURTENANCES

DEMOLISH SCUM PUMP, ABOVE GRADE PIPING, AND ASSOCIATED APPURTENANCES AS SHOWN

DEMOLISH
EX 30-PI
SEE NOTE 1

DEMOLISH WEIR GATES AND ASSOCIATED APPURTENANCES

SAWCUT AND DEMOLISH CONCRETE SLAB AND WALLS AS SHOWN

EX 36-PI

EX 24-PE

EX 6-PSC

B
22D102

DEMOLISH SLUDGE PUMP, ABOVE GRADE PIPING, AND ASSOCIATED APPURTENANCES AS SHOWN (TYP OF 2)

EX 6-PSL

PRIMARY CLARIFIER NO 2, SEE SHT 21D103

PLAN
3/8" = 1'-0"

FILE: 215786-22D101.dwg
DATE: Oct 06, 2015-3:57:58pm, rsnider

HDR Engineering, Inc.

ISSUE	DATE	DESCRIPTION
A	JUNE 2015	ISSUED FOR BID

PROJECT MANAGER	C. OLSON
DESIGNED	T. KONTONICKAS
DESIGNED	
CHECKED	C. OLSON
DRAWN	M. FOYLE
DATE	JUNE 30, 2015
PROJECT NUMBER	215786

REGISTERED PROFESSIONAL ENGINEER
CRAIG A. OLSON
NO. 39819
EXP. 12/31/15
CIVIL
STATE OF CALIFORNIA
06-30-15

CITY OF PINOLE CALIFORNIA 1903

PINOLE/HERCULES
WATER POLLUTION
CONTROL PLANT UPGRADE
CLIENT PN

DEMOLITION

PRIMARY FLOW DISTRIBUTION PLAN

0 1" 2"

FILENAME	215786-22D101
SCALE	AS NOTED

SHEET
22D101

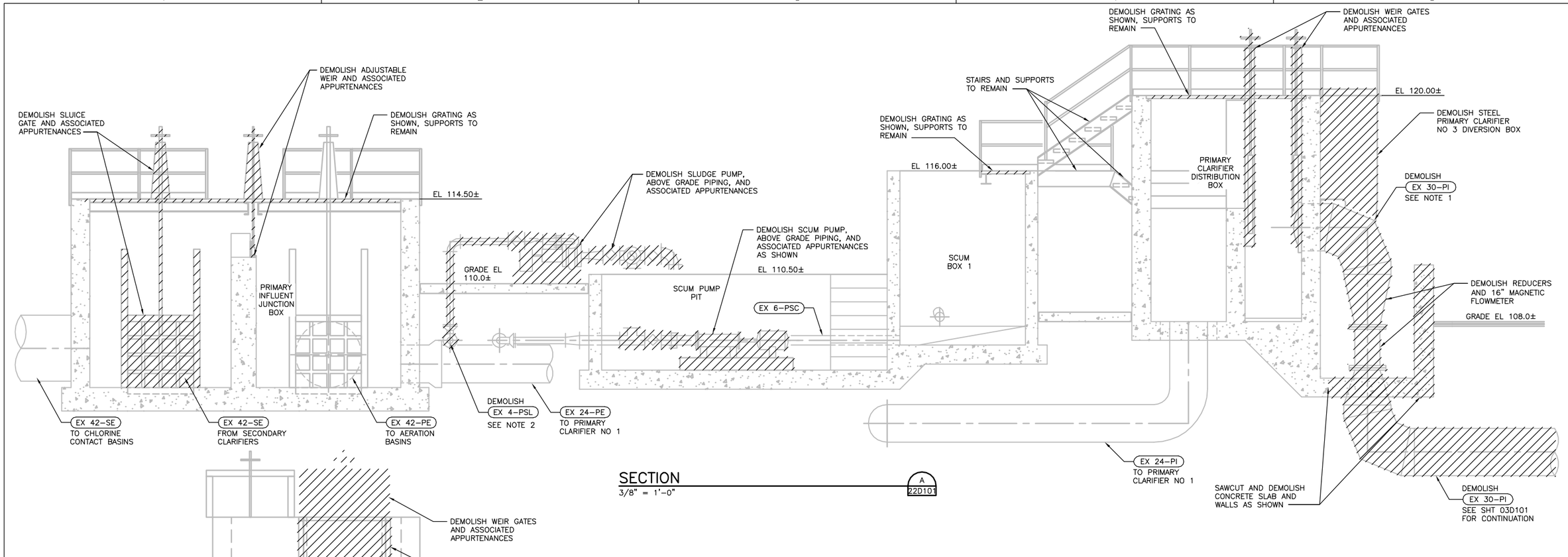

SECTION
3/8" = 1'-0"
A 22D101

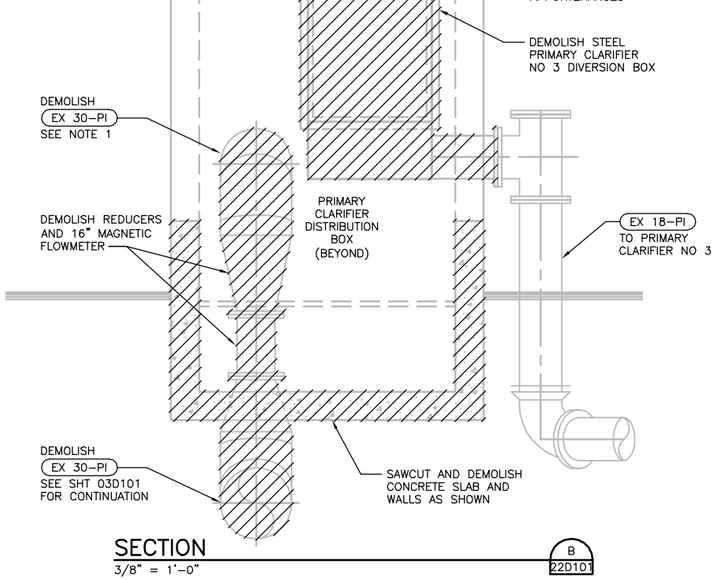

SECTION
3/8" = 1'-0"
B 22D101

GENERAL NOTES:

1. SAWCUT 30–PI AT FACE OF CONCRETE WALL AND DEMOLISH PIPELINE.
2. SAWCUT CONCRETE AS REQUIRED FOR TRENCHING.

FILE: 215786–22D102.dwg
DATE: Oct 06, 2015–3:58:04pm, ranider

HDR Engineering, Inc.

ISSUE	DATE	DESCRIPTION
A	JUNE 2015	ISSUED FOR BID

PROJECT MANAGER	C. OLSON
DESIGNED	T. KONTONICKAS
DESIGNED	
CHECKED	C. OLSON
DRAWN	M. FOYLE
DATE	JUNE 30, 2015
PROJECT NUMBER	215786

REGISTERED PROFESSIONAL ENGINEER CRAIG A. OLSON NO. 39819 EXP. 12/31/15 CIVIL STATE OF CALIFORNIA 06-30-15

CITY OF PINOLE CALIFORNIA 1903

PINOLE/HERCULES
WATER POLLUTION
CONTROL PLANT UPGRADE
CLIENT PN

DEMOLITION

PRIMARY FLOW DISTRIBUTION SECTIONS

0 1" 2"

FILENAME	215786–22D102
SCALE	AS NOTED

SHEET 22D102

GENERAL NOTES:

1. DEMOLISH ENTIRE CONCRETE SCUM AND SLUDGE PUMP STATION STRUCTURE, SLUDGE AND SCUM PUMPS, PIPING AND ASSOCIATED APPURTENANCES, GUARDRAILS, AND ALL ELECTRICAL EQUIPMENT.

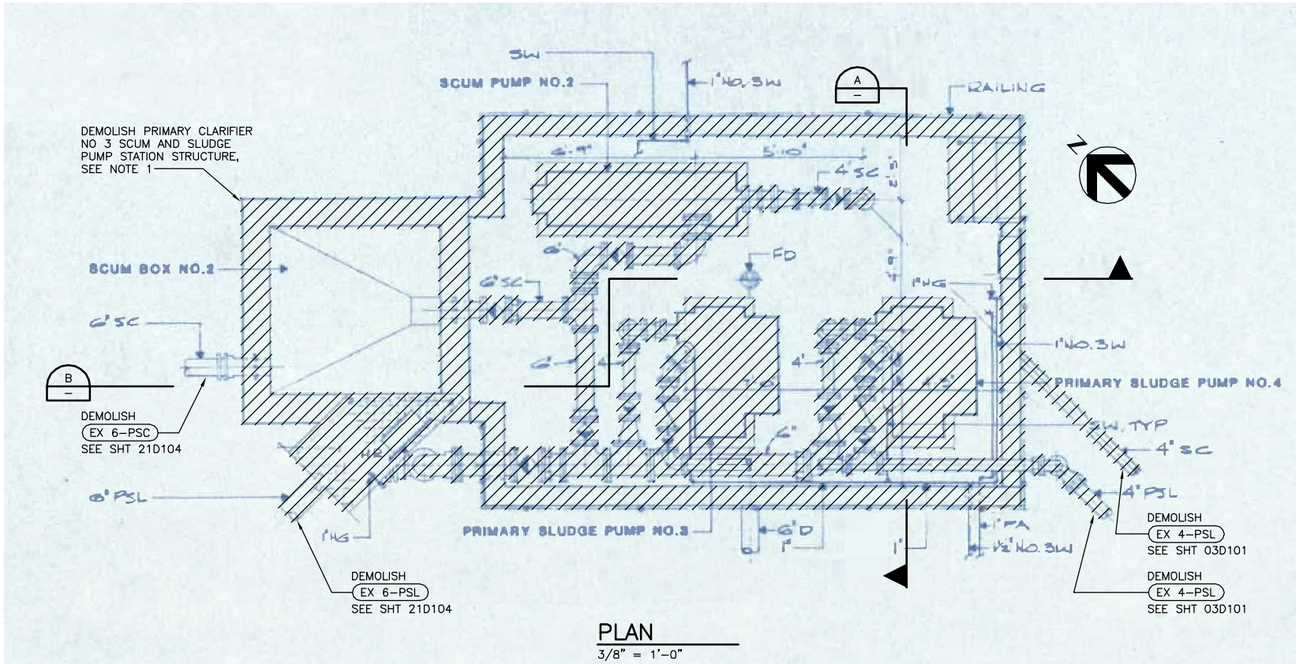

PLAN
3/8" = 1'-0"

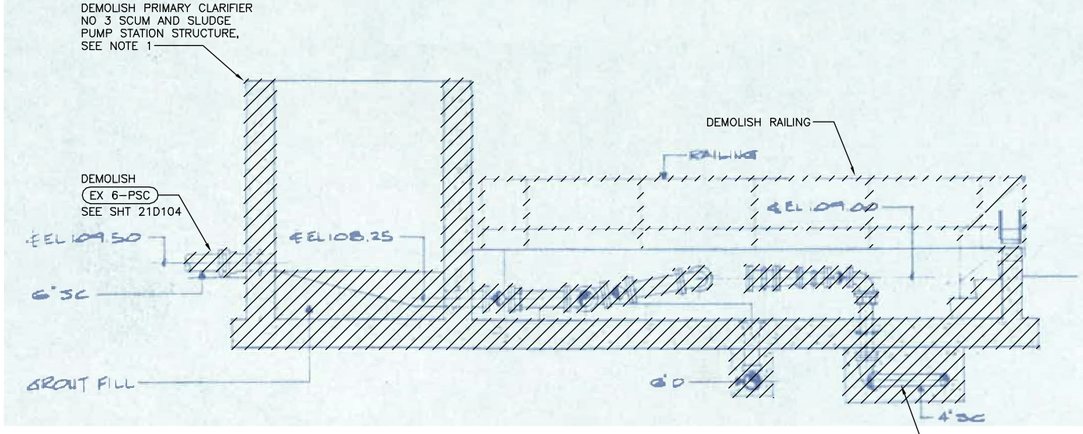

SECTION
3/8" = 1'-0"

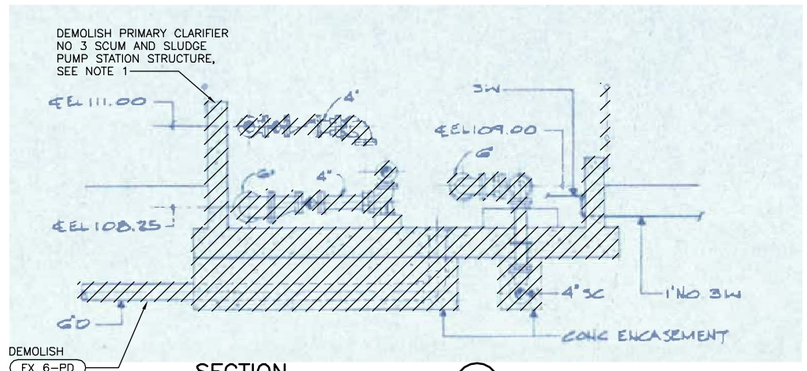

SECTION
3/8" = 1'-0"

FILE: 215786-23D101.dwg
DATE: Oct 06, 2015-3:58:10pm, ranider

HDR Engineering, Inc.

ISSUE	DATE	DESCRIPTION
A	JUNE 2015	ISSUED FOR BID

PROJECT MANAGER	C. OLSON
DESIGNED	T. KONTONICKAS
DESIGNED	
CHECKED	C. OLSON
DRAWN	M. FOYLE
DATE	JUNE 30, 2015
PROJECT NUMBER	215786

REGISTERED PROFESSIONAL ENGINEER
CRAIG A. OLSON
NO. 39819
EXP. 12/31/15
CIVIL
STATE OF CALIFORNIA
06-30-15

CITY OF PINOLE CALIFORNIA 1903

PINOLE/HERCULES
WATER POLLUTION
CONTROL PLANT UPGRADE
CLIENT PN

DEMOLITION
PRIMARY CLARIFIER NO 3
SCUM AND SLUDGE SLUDGE PUMP STATION
PLAN AND SECTIONS

0 1" 2"

FILENAME	215786-23D101
SCALE	NONE

SHEET
23D101

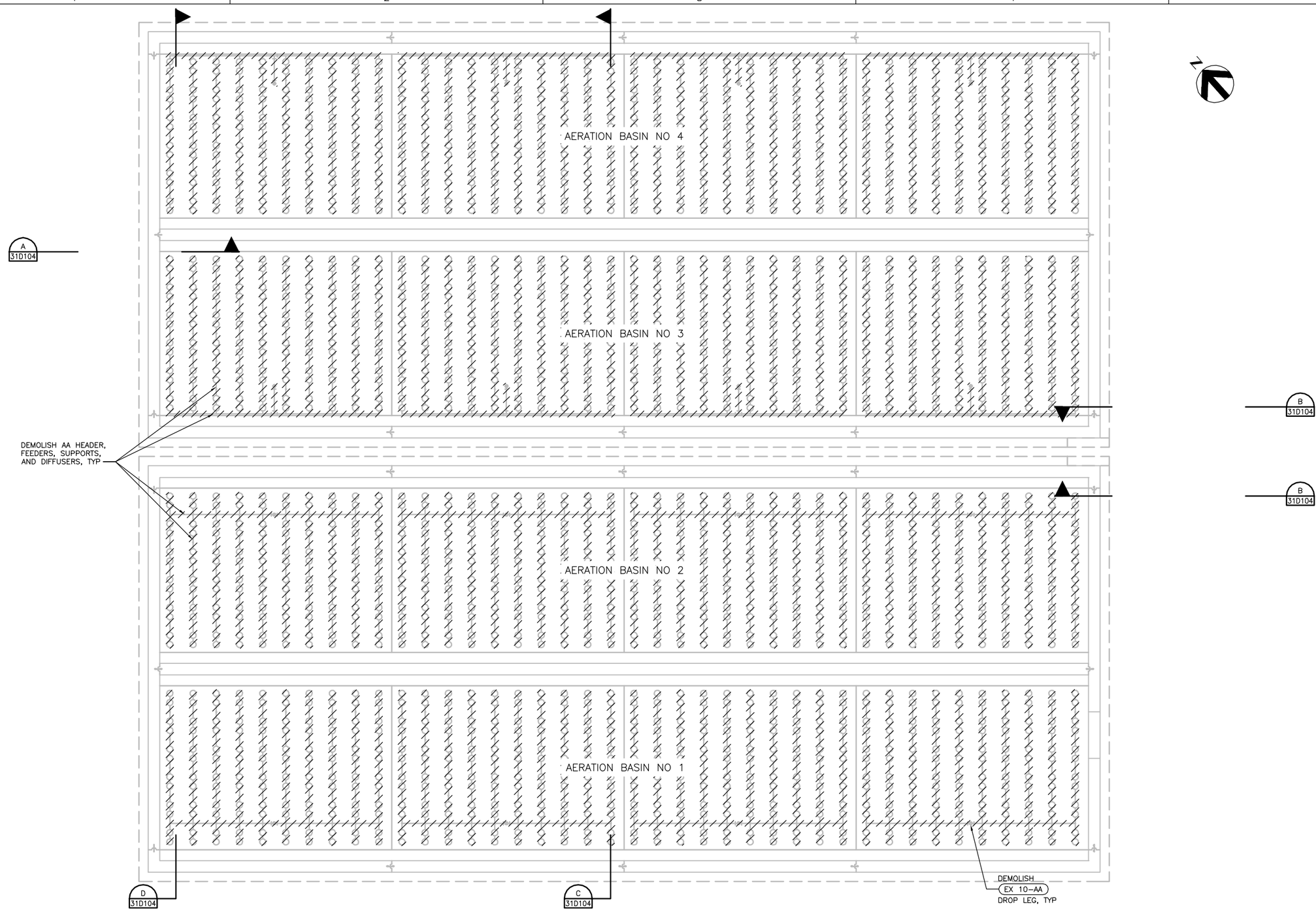

FILE: 215786-31D101.dwg
DATE: Oct 06, 2015-3:58:27pm, rsnider

HDR Engineering, Inc.

ISSUE	DATE	DESCRIPTION
A	JUNE 2015	ISSUED FOR BID

PROJECT MANAGER	C. OLSON
DESIGNED	T. KONTONICKAS
DESIGNED	
CHECKED	C. OLSON
DRAWN	B.DOWN
DATE	JUNE 30, 2015
PROJECT NUMBER	215786

REGISTERED PROFESSIONAL ENGINEER
CRAIG A. OLSON
NO. 39819
EXP. 12/31/15
CIVIL
STATE OF CALIFORNIA
06-30-15

CITY OF PINOLE CALIFORNIA 1903

PINOLE/HERCULES
WATER POLLUTION
CONTROL PLANT UPGRADE
CLIENT PN

DEMOLITION

AERATION BASINS
PLAN AT ELEVATION 100.00

0 1" 2"

FILENAME	215786-31D101
SCALE	3/16" = 1'-0"

SHEET
31D101

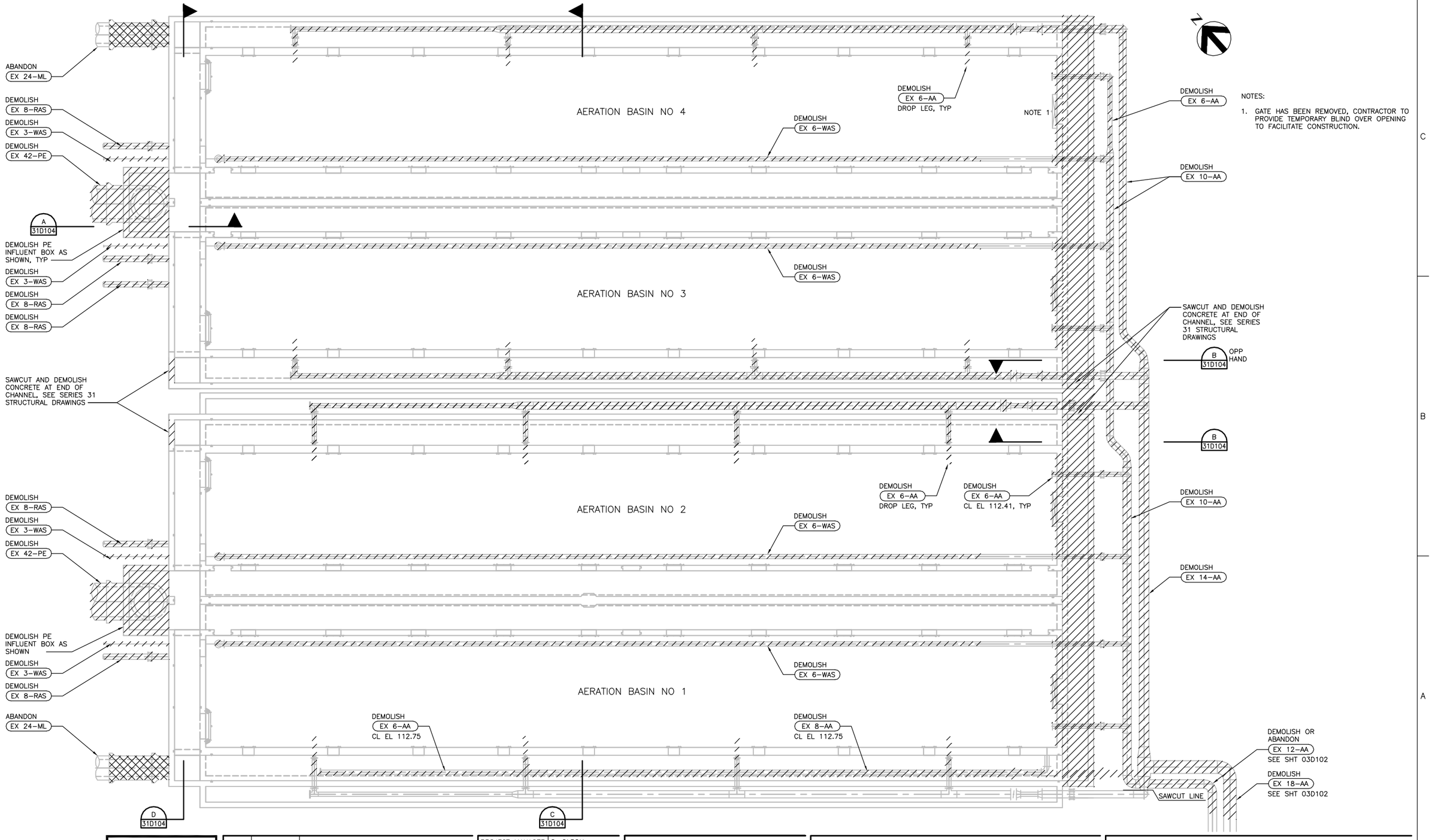

NOTES:

1. GATE HAS BEEN REMOVED, CONTRACTOR TO PROVIDE TEMPORARY BLIND OVER OPENING TO FACILITATE CONSTRUCTION.

FILE: 215786-31D102.dwg
DATE: Oct 06, 2015-3:58:38pm rsnider

HDR Engineering, Inc.

ISSUE	DATE	DESCRIPTION
A	JUNE 2015	ISSUED FOR BID

PROJECT MANAGER	C. OLSON
DESIGNED	T. KONTONICKAS
DESIGNED	
CHECKED	C. OLSON
DRAWN	B. DOWN
DATE	JUNE 30, 2015
PROJECT NUMBER	215786

REGISTERED PROFESSIONAL ENGINEER CRAIG A. OLSON NO. 39819 EXP. 12/31/15 CIVIL STATE OF CALIFORNIA 06-30-15

CITY OF PINOLE CALIFORNIA 1903

PINOLE/HERCULES
WATER POLLUTION
CONTROL PLANT UPGRADE
CLIENT PN

DEMOLITION

AERATION BASINS
PLAN AT ELEVATION 112.0

0 1" 2"

FILENAME	215786-31D102
SCALE	3/16" = 1'-0"

SHEET **31D102**

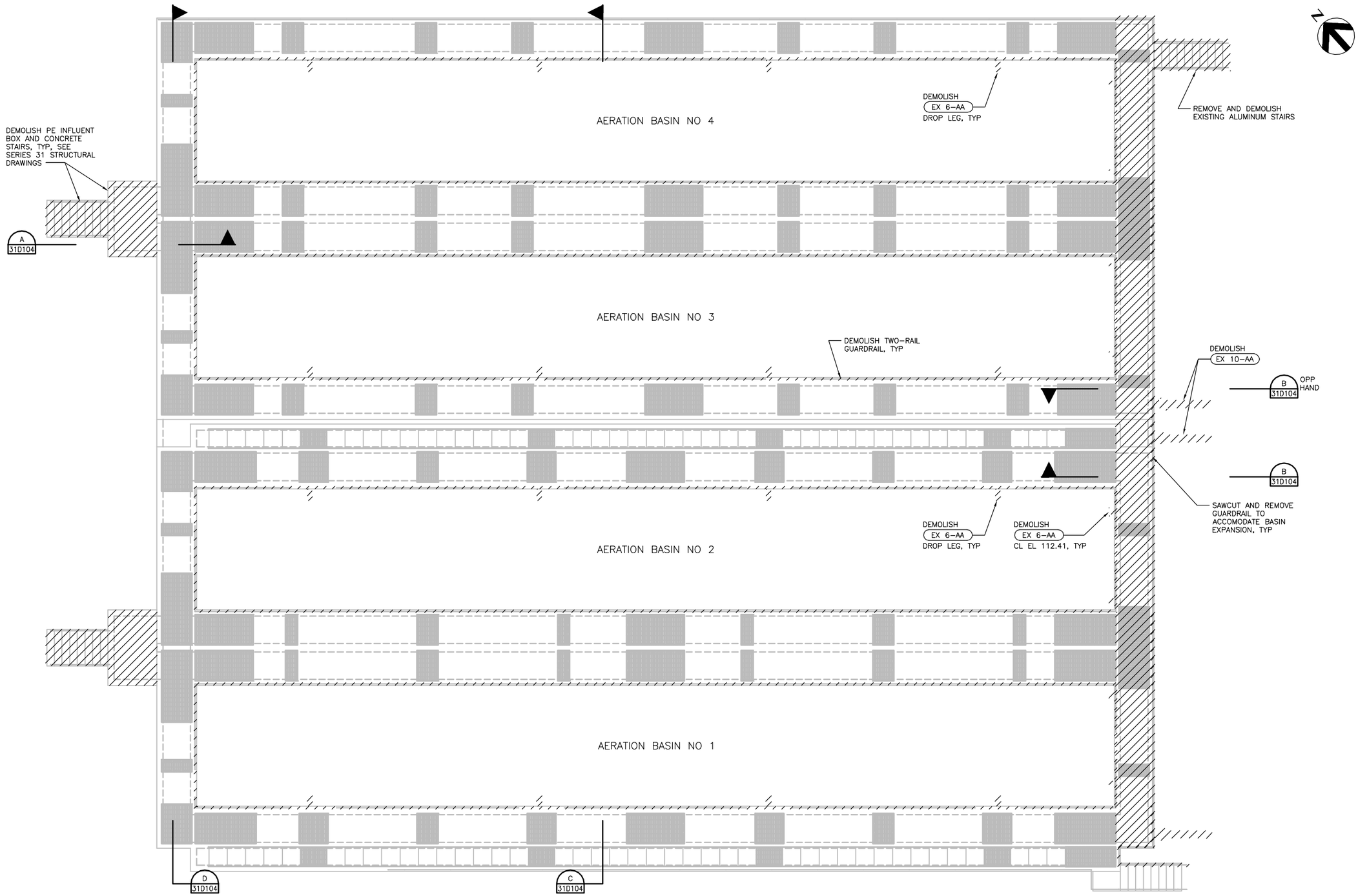

FILE: 215786-31D103.dwg
DATE: Oct 06, 2015-3:58:44pm, rsnider

HDR Engineering, Inc.

ISSUE	DATE	DESCRIPTION
A	JUNE 2015	ISSUED FOR BID

PROJECT MANAGER	C. OLSON
DESIGNED	T. KONTONICKAS
DESIGNED	
CHECKED	C. OLSON
DRAWN	B. DOWN
DATE	JUNE 30, 2015
PROJECT NUMBER	215786

REGISTERED PROFESSIONAL ENGINEER
CRAIG A. OLSON
NO. 39819
EXP. 12/31/15
CIVIL
STATE OF CALIFORNIA
06-30-15

CITY OF PINOLE CALIFORNIA 1903

PINOLE/HERCULES
WATER POLLUTION
CONTROL PLANT UPGRADE
CLIENT PN

DEMOLITION

AERATION BASINS
PLAN AT ELEVATION 115.00

0 1" 2"

FILENAME	215786-31D103
SCALE	3/16" = 1'-0"

SHEET
31D103

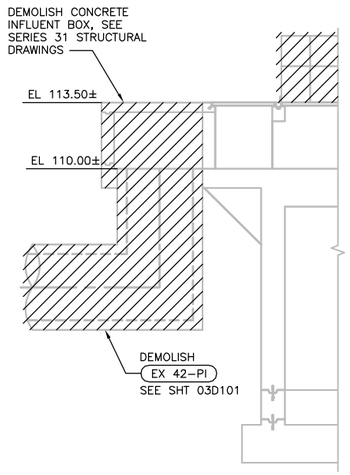

SECTION
1/4" = 1'-0"
A 31D101

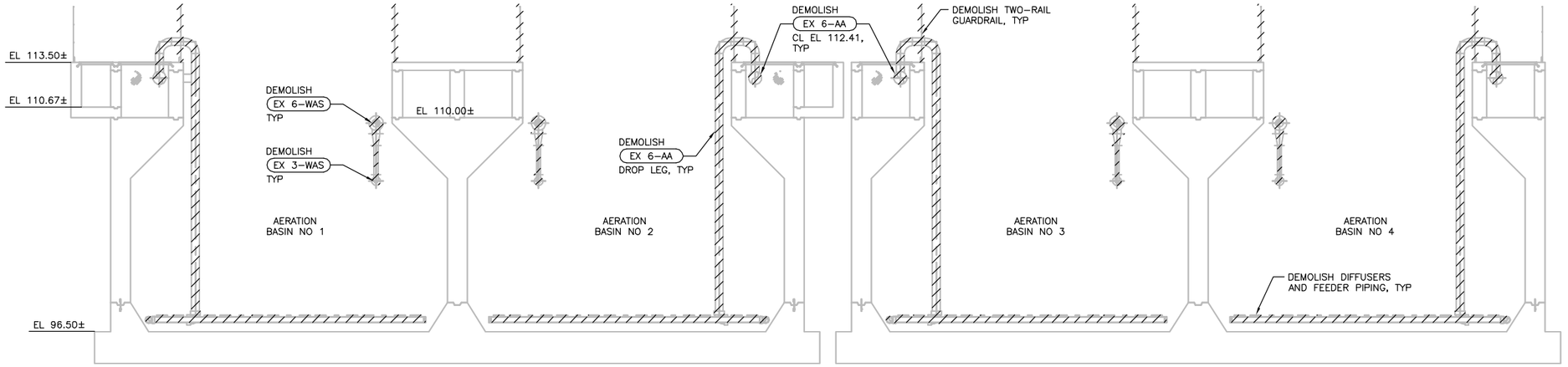

SECTION
1/4" = 1'-0"
C 31D101

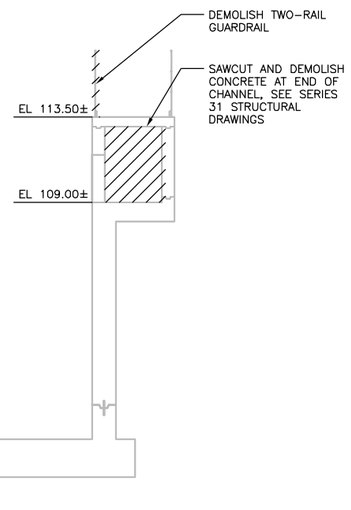

SECTION
1/4" = 1'-0"
B 31D101

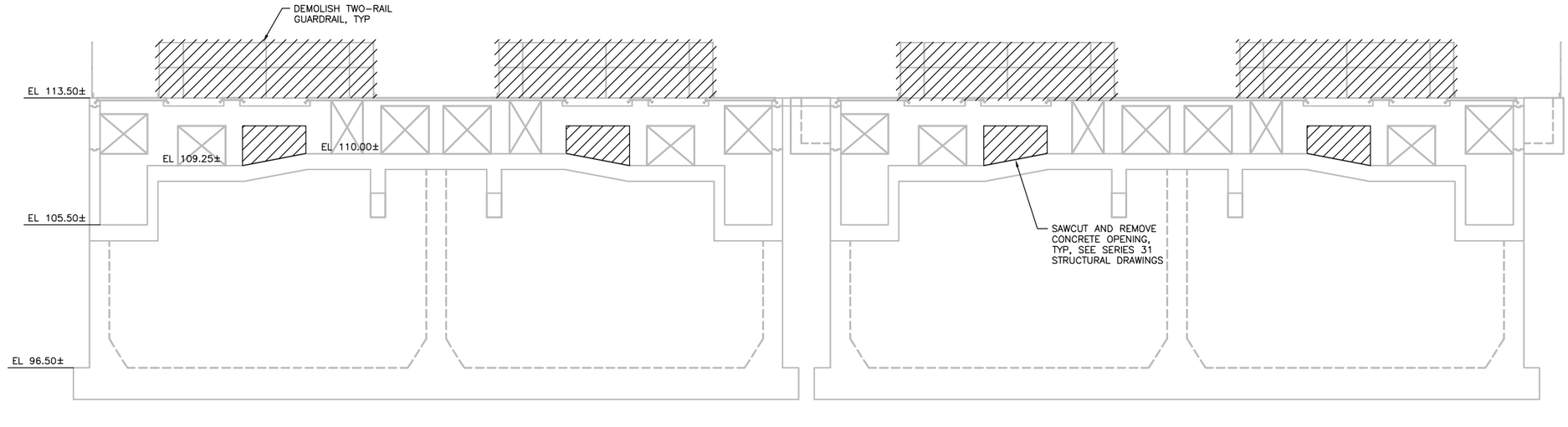

SECTION
1/4" = 1'-0"
D 31D101

FILE: 215786-31D104.dwg
DATE: Oct 06, 2015-3:58:50pm, rsnider

HDR
HDR Engineering, Inc.

ISSUE	DATE	DESCRIPTION
A	JUNE 2015	ISSUED FOR BID

PROJECT MANAGER	C. OLSON
DESIGNED	T. KONTONICKAS
DESIGNED	
CHECKED	C. OLSON
DRAWN	B. DOWN
DATE	JUNE 30, 2015
PROJECT NUMBER	215786

REGISTERED PROFESSIONAL ENGINEER
CRAIG A. OLSON
NO. 39819
EXP. 12/31/15
CIVIL
STATE OF CALIFORNIA
06-30-15

CITY OF PINOLE CALIFORNIA 1903

PINOLE/HERCULES
WATER POLLUTION
CONTROL PLANT UPGRADE
CLIENT PN

DEMOLITION

AERATION BASINS SECTIONS

0 1" 2"

FILENAME	215786-31D104
SCALE	1/4" = 1'-0"

SHEET
31D104



PHOTOGRAPH 1 / 31D103
NTS



PHOTOGRAPH 2 / 31D103
NTS



PHOTOGRAPH 3 / 31D103
NTS

FILE: 215786-31D105.dwg
DATE: Oct 06, 2015-3:58:55pm, rsnider

HDR Engineering, Inc.

ISSUE	DATE	DESCRIPTION
A	JUNE 2015	ISSUED FOR BID

PROJECT MANAGER	C. OLSON
DESIGNED	T. KONTONICKAS
DESIGNED	
CHECKED	C. OLSON
DRAWN	B. DOWN
DATE	JUNE 30, 2015
PROJECT NUMBER	215786

REGISTERED PROFESSIONAL ENGINEER
CRAIG A. OLSON
NO. 39819
EXP. 12/31/15
CIVIL
STATE OF CALIFORNIA
06-30-15

CITY OF PINOLE CALIFORNIA 1903

PINOLE/HERCULES
WATER POLLUTION
CONTROL PLANT UPGRADE
CLIENT PN

DEMOLITION

AERATION BASINS PHOTOGRAPHS

0 1" 2"

FILENAME	215786-31D105
SCALE	AS NOTED

SHEET **31D105**

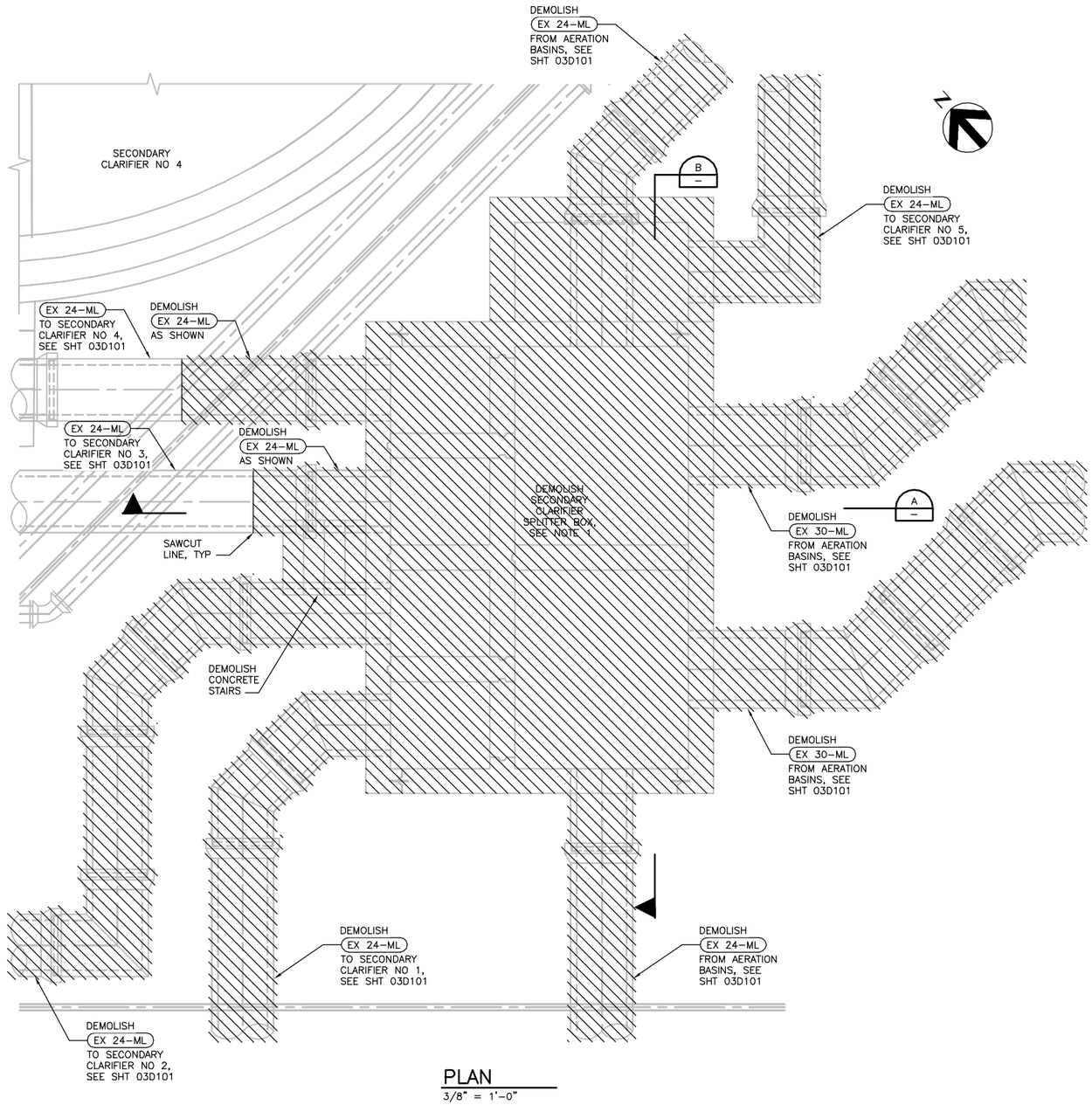

PLAN
3/8" = 1'-0"

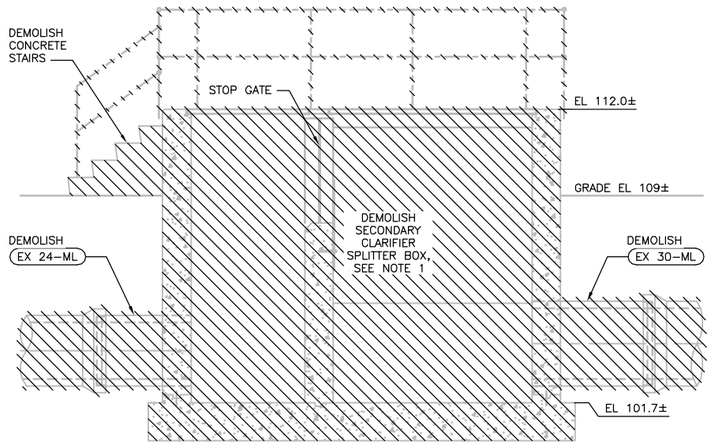

SECTION
3/8" = 1'-0"
A

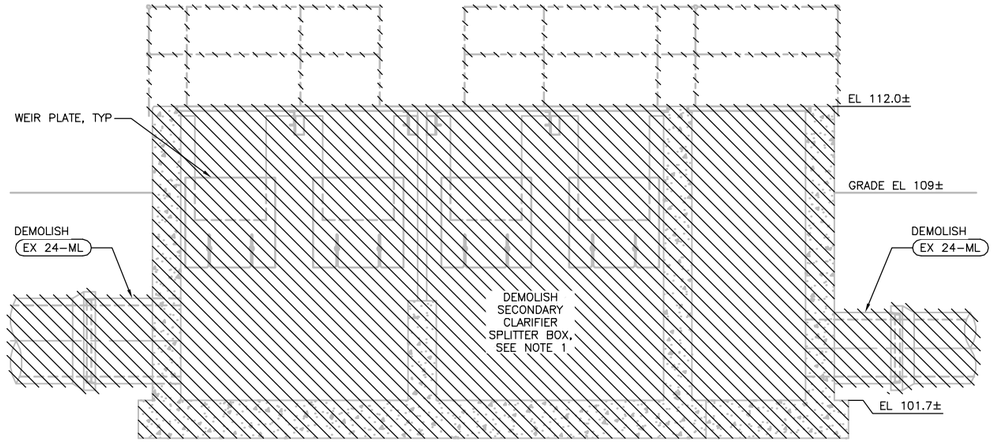

SECTION
3/8" = 1'-0"
B

GENERAL NOTES:

1. DEMOLISH ENTIRE CONCRETE STRUCTURE, FOUR WEIR PLATES, STOP GATE, GRATING, GUARDRAILS, ALL APPURTENANCES, AND PIPING AS SHOWN.
2. DEMOLITION WORK FOR PIPING OTHER THAN THAT ASSOCIATED WITH SERIES 32 IS NOT REFLECTED ON THIS SHEET. REFER TO SHEET 03D101 FOR OTHER PIPING IN THIS AREA.

FILE: 215786-32D101.dwg
DATE: Oct 06, 2015-3:59:01 pm, rsnider

HDR Engineering, Inc.

ISSUE	DATE	DESCRIPTION
A	JUNE 2015	ISSUED FOR BID

PROJECT MANAGER	C. OLSON
DESIGNED	T. KONTONICKAS
DESIGNED	
CHECKED	C. OLSON
DRAWN	B. DOWN
DATE	JUNE 30, 2015
PROJECT NUMBER	215786

REGISTERED PROFESSIONAL ENGINEER
CRAIG A. OLSON
NO. 39819
EXP. 12/31/15
CIVIL
STATE OF CALIFORNIA
06-30-15

CITY OF PINOLE CALIFORNIA 1903

PINOLE/HERCULES
WATER POLLUTION
CONTROL PLANT UPGRADE
CLIENT PN

DEMOLITION

SECONDARY CLARIFIER SPLITTER BOX PLAN AND SECTIONS

0 1" 2"

FILENAME	215786-32D101
SCALE	NONE

SHEET
32D101

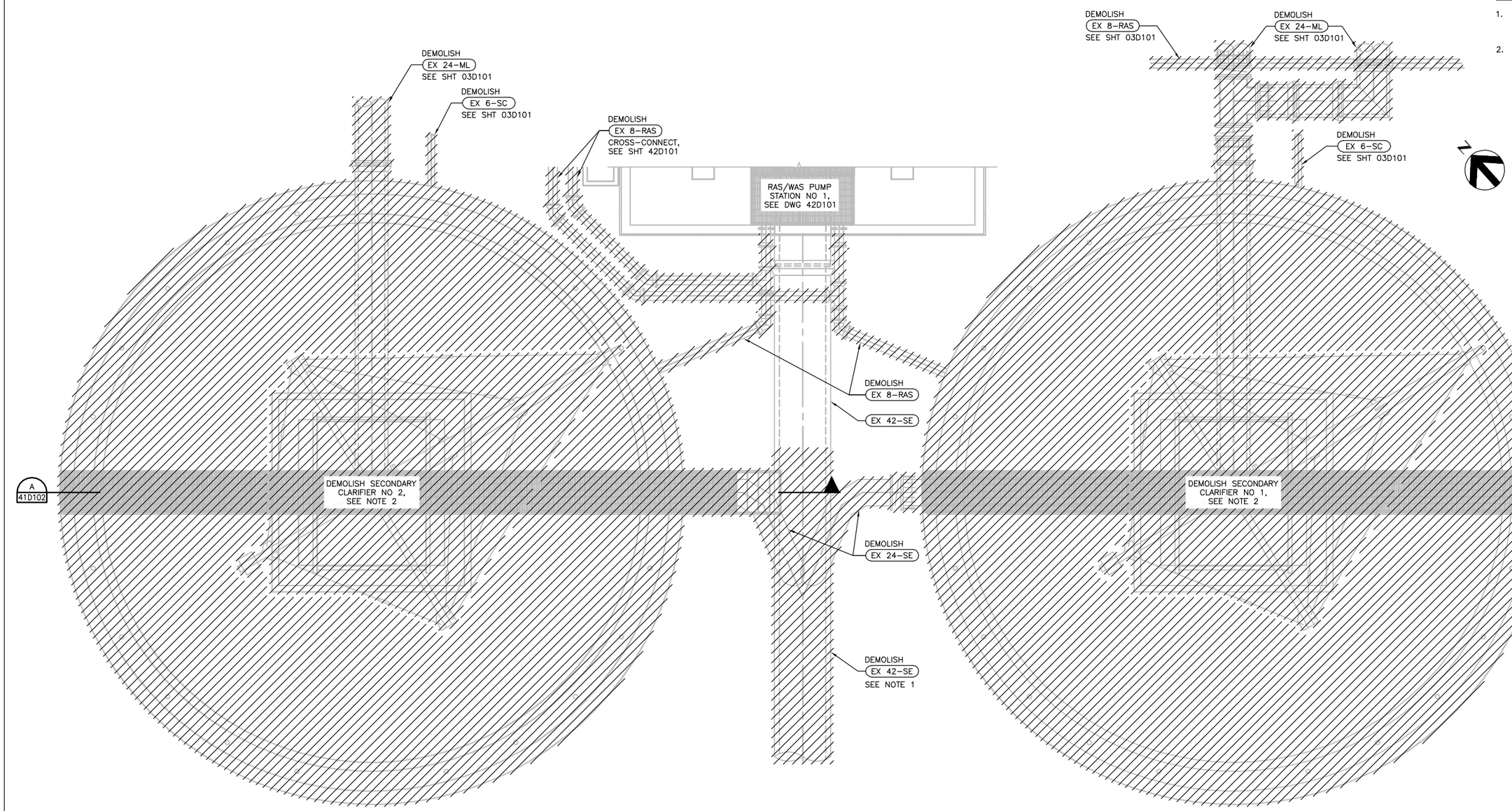

PLAN
1/4" = 1'-0"

GENERAL NOTES:

1. DEMOLISH PIPELINE UP TO LIMITS INDICATED. RE-CONNECT PIPELINE AS SHOWN ON 03C101 OR 42P101.
2. DEMOLISH ENTIRE CONCRETE CLARIFIER STRUCTURE, SLUDGE AND SCUM COLLECTION MECHANISMS, CENTER WELL, INFLUENT WELL, MOTOR DRIVE AND ASSOCIATED APPURTENANCES, WALKWAY AND GUARDRAILS, BAFFLES AND WEIRS, AND ALL PIPING.

FILE: 215786-41D101.dwg
DATE: Oct 06, 2015-3:59:07pm, rsnider

HDR
HDR Engineering, Inc.

ISSUE	DATE	DESCRIPTION
A	JUNE 2015	ISSUED FOR BID

PROJECT MANAGER	C. OLSON
DESIGNED	T. KONTONICKAS
DESIGNED	
CHECKED	C. OLSON
DRAWN	B. DOWN
DATE	JUNE 30, 2015
PROJECT NUMBER	215786

REGISTERED PROFESSIONAL ENGINEER
CRAIG A. OLSON
NO. 39819
EXP. 12/31/15
CIVIL
STATE OF CALIFORNIA
06-30-15

CITY OF PINOLE CALIFORNIA 1903

PINOLE/HERCULES
WATER POLLUTION
CONTROL PLANT UPGRADE
CLIENT PN

DEMOLITION

SECONDARY CLARIFIER NO 1 AND NO 2
PLAN

0 1" 2"

FILENAME	215786-41D101
SCALE	NONE

SHEET
41D101

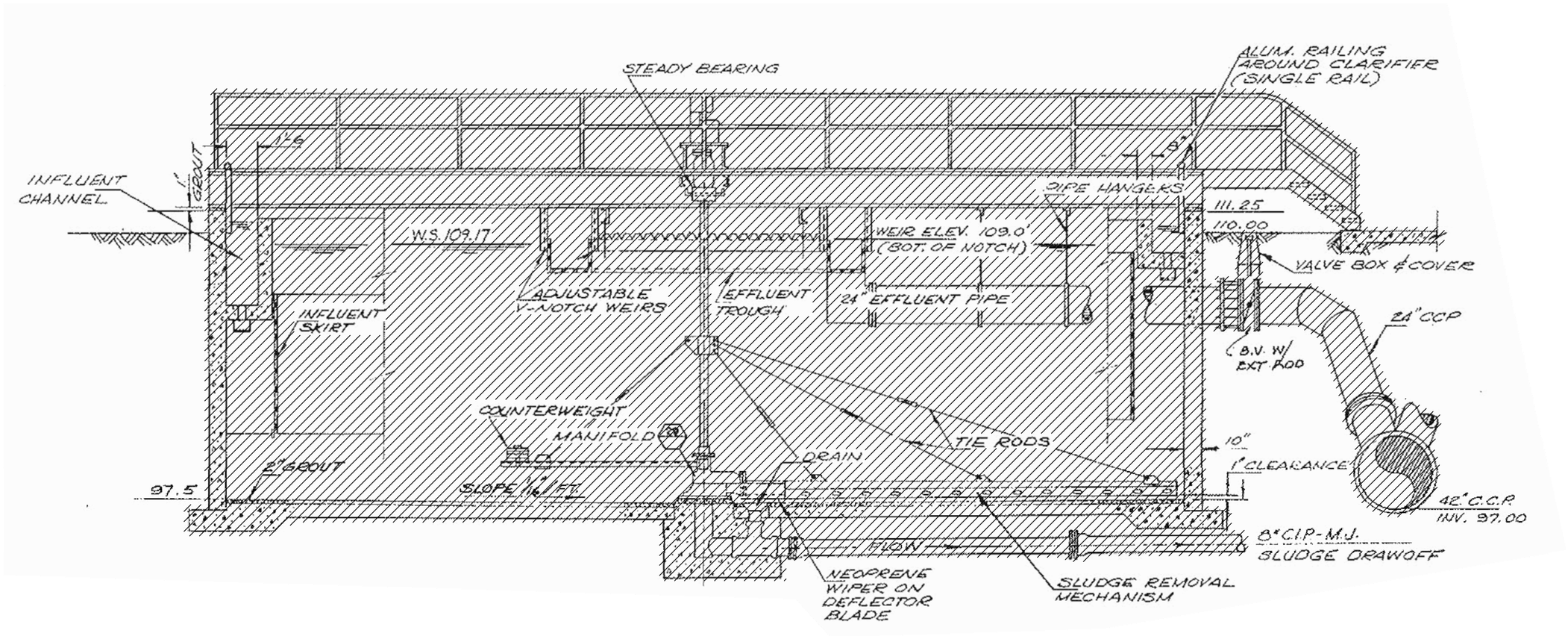

SECTION A
3/8" = 1'-0" 41D101

FILE: 215786-41D102.dwg
DATE: Oct 06, 2015-3:59:12pm, ranider

HDR Engineering, Inc.

ISSUE	DATE	DESCRIPTION
A	JUNE 2015	ISSUED FOR BID

PROJECT MANAGER	C. OLSON
DESIGNED	T. KONTONICKAS
DESIGNED	
CHECKED	C. OLSON
DRAWN	M. FOYLW
DATE	JUNE 30, 2015
PROJECT NUMBER	215786

REGISTERED PROFESSIONAL ENGINEER
CRAIG A. OLSON
NO. 39819
EXP. 12/31/15
CIVIL
STATE OF CALIFORNIA
06-30-15

CITY OF PINOLE CALIFORNIA 1903

PINOLE/HERCULES
WATER POLLUTION
CONTROL PLANT UPGRADE
CLIENT PN

DEMOLITION

SECONDARY CLARIFIER NO 1 AND NO 2
TYPICAL SECTION

0 1" 2"

FILENAME	215786-41D102
SCALE	AS NOTED

SHEET
41D102

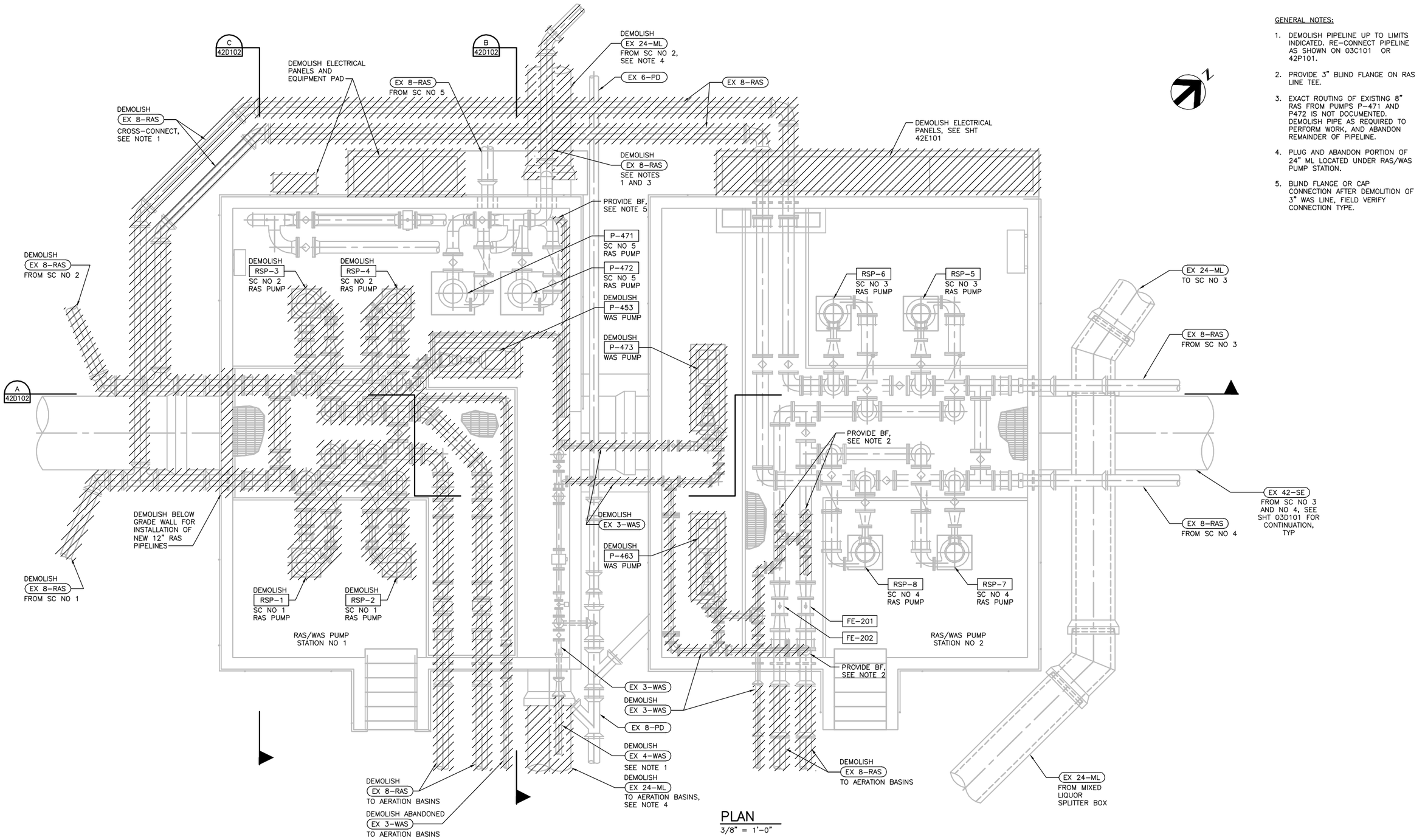

PLAN
3/8" = 1'-0"

GENERAL NOTES:

1. DEMOLISH PIPELINE UP TO LIMITS INDICATED. RE-CONNECT PIPELINE AS SHOWN ON 03C101 OR 42P101.
2. PROVIDE 3" BLIND FLANGE ON RAS LINE TEE.
3. EXACT ROUTING OF EXISTING 8" RAS FROM PUMPS P-471 AND P472 IS NOT DOCUMENTED. DEMOLISH PIPE AS REQUIRED TO PERFORM WORK, AND ABANDON REMAINDER OF PIPELINE.
4. PLUG AND ABANDON PORTION OF 24" ML LOCATED UNDER RAS/WAS PUMP STATION.
5. BLIND FLANGE OR CAP CONNECTION AFTER DEMOLITION OF 3" WAS LINE, FIELD VERIFY CONNECTION TYPE.

FILE: 215786-42D101.dwg
DATE: Oct 06, 2015-3:59:21pm, ranider

HDR Engineering, Inc.

ISSUE	DATE	DESCRIPTION
A	JUNE 2015	ISSUED FOR BID

PROJECT MANAGER	C. OLSON
DESIGNED	T. KONTONICKAS
DESIGNED	
CHECKED	C. OLSON
DRAWN	B. DOWN
DATE	JUNE 30, 2015
PROJECT NUMBER	215786

REGISTERED PROFESSIONAL ENGINEER CRAIG A. OLSON NO. 39819 EXP. 12/31/15 CIVIL STATE OF CALIFORNIA 06-30-15

CITY OF PINOLE CALIFORNIA 1903

PINOLE/HERCULES WATER POLLUTION CONTROL PLANT UPGRADE
CLIENT PN

DEMOLITION

RAS/WAS PUMP STATIONS NO 1 AND NO 2 PLAN

0 1" 2"

FILENAME	215786-42D101
SCALE	AS NOTED

SHEET **42D101**

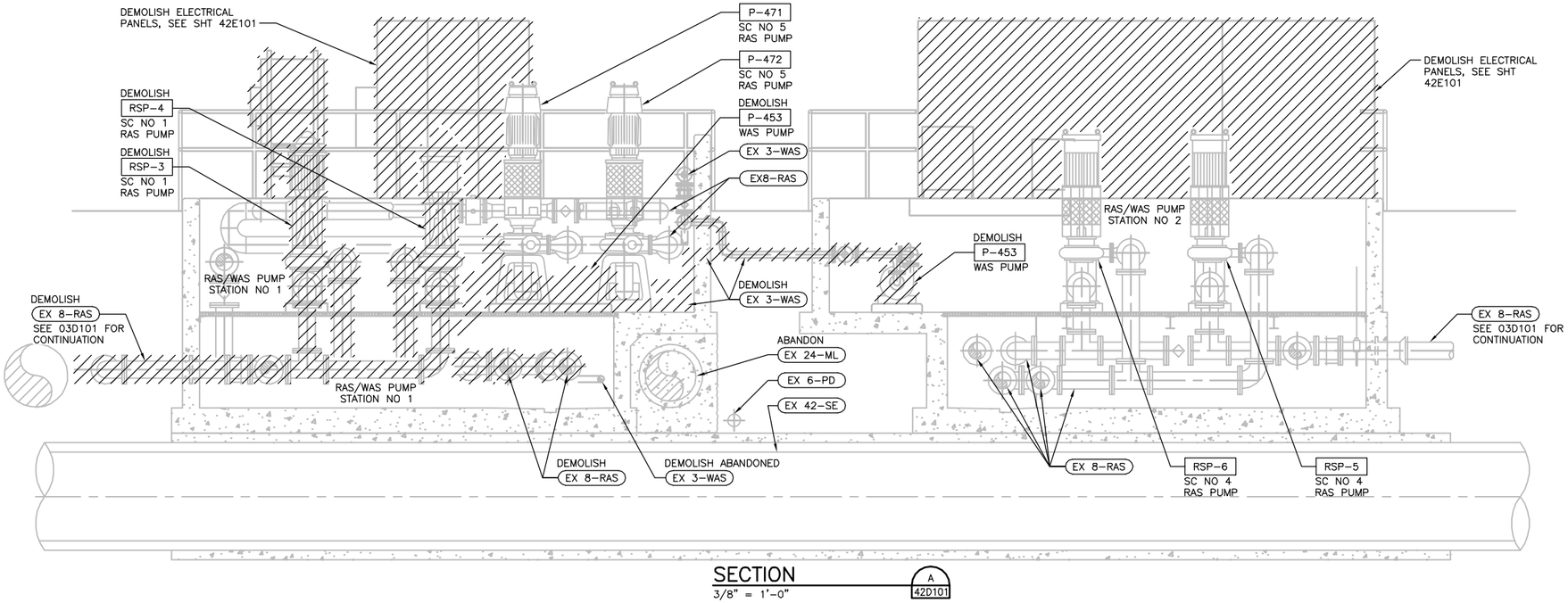

SECTION
3/8" = 1'-0"
A 42D101

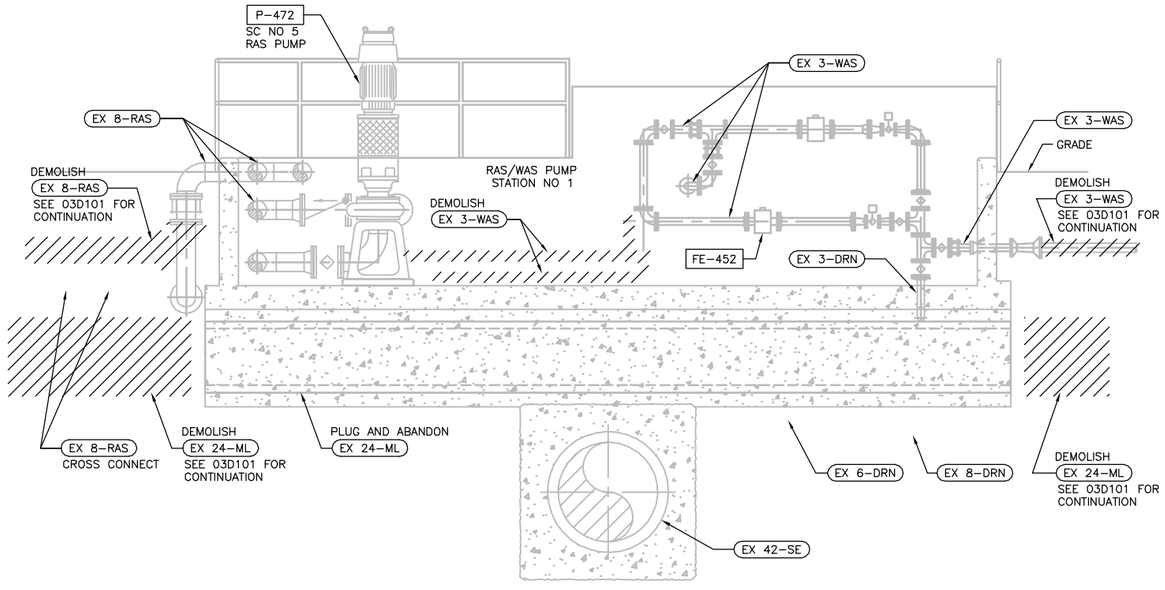

SECTION
3/8" = 1'-0"
B 42D101

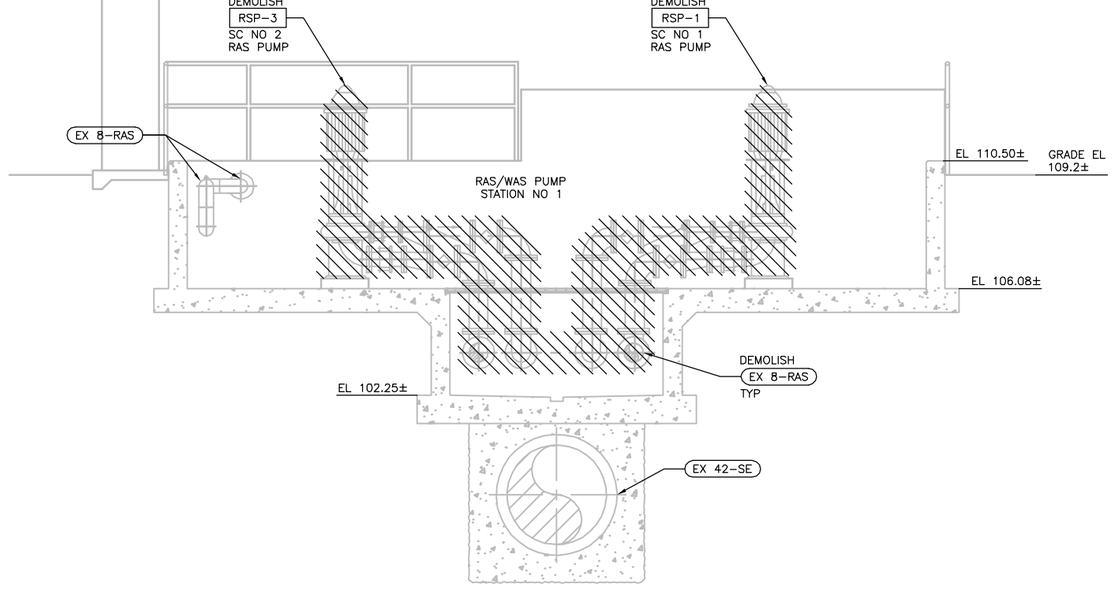

SECTION
3/8" = 1'-0"
C 42D101

FILE: 215786-42D102.dwg
DATE: Oct 06, 2015-3:59:28pm, rsnider

HDR
HDR Engineering, Inc.

ISSUE	DATE	DESCRIPTION
A	JUNE 2015	ISSUED FOR BID

PROJECT MANAGER	C. OLSON
DESIGNED	T. KONTONICKAS
DESIGNED	
CHECKED	C. OLSON
DRAWN	B. DOWN
DATE	JUNE 30, 2015
PROJECT NUMBER	215786

REGISTERED PROFESSIONAL ENGINEER
CRAIG A. OLSON
NO. 39819
EXP. 12/31/15
CIVIL
STATE OF CALIFORNIA
06-30-15

CITY OF PINOLE CALIFORNIA 1903

PINOLE/HERCULES
WATER POLLUTION
CONTROL PLANT UPGRADE
CLIENT PN

DEMOLITION

RAS/WAS PUMP STATIONS NO 1 AND NO 2 SECTIONS

0 1" 2"

FILENAME	215786-42D102
SCALE	AS NOTED

SHEET
42D102

GENERAL NOTES:

1. DEMOLISH CONCRETE EQUIPMENT PADS, BLOWERS, MOTORS, CONDUITS AND WIRES FOR BLOWERS 4, 5 AND 6.
2. DEMOLISH AIR FILTER, CONCRETE SUPPORTS, AND ASSOCIATED CONDUITS AND WIRES.
3. ALL UNUSED EXPOSED ELECTRICAL CONDUIT IS TO BE REMOVED ALONG WITH UNUSED CONDUCTORS. EMBEDDED ELECTRICAL CONDUITS ARE TO BE CUT OFF FLUSH WHERE THEY EMERGE FROM CONCRETE, PLUGGED WITH GROUT, AND PAINTED.
4. 12" AA IS CURRENTLY ABANDONED. DEMOLISH ANY REMAINING PIPE AS REQUIRED TO PERFORM WORK. ABANDON OR DEMOLISH ANY REMAINING PIPELINE.

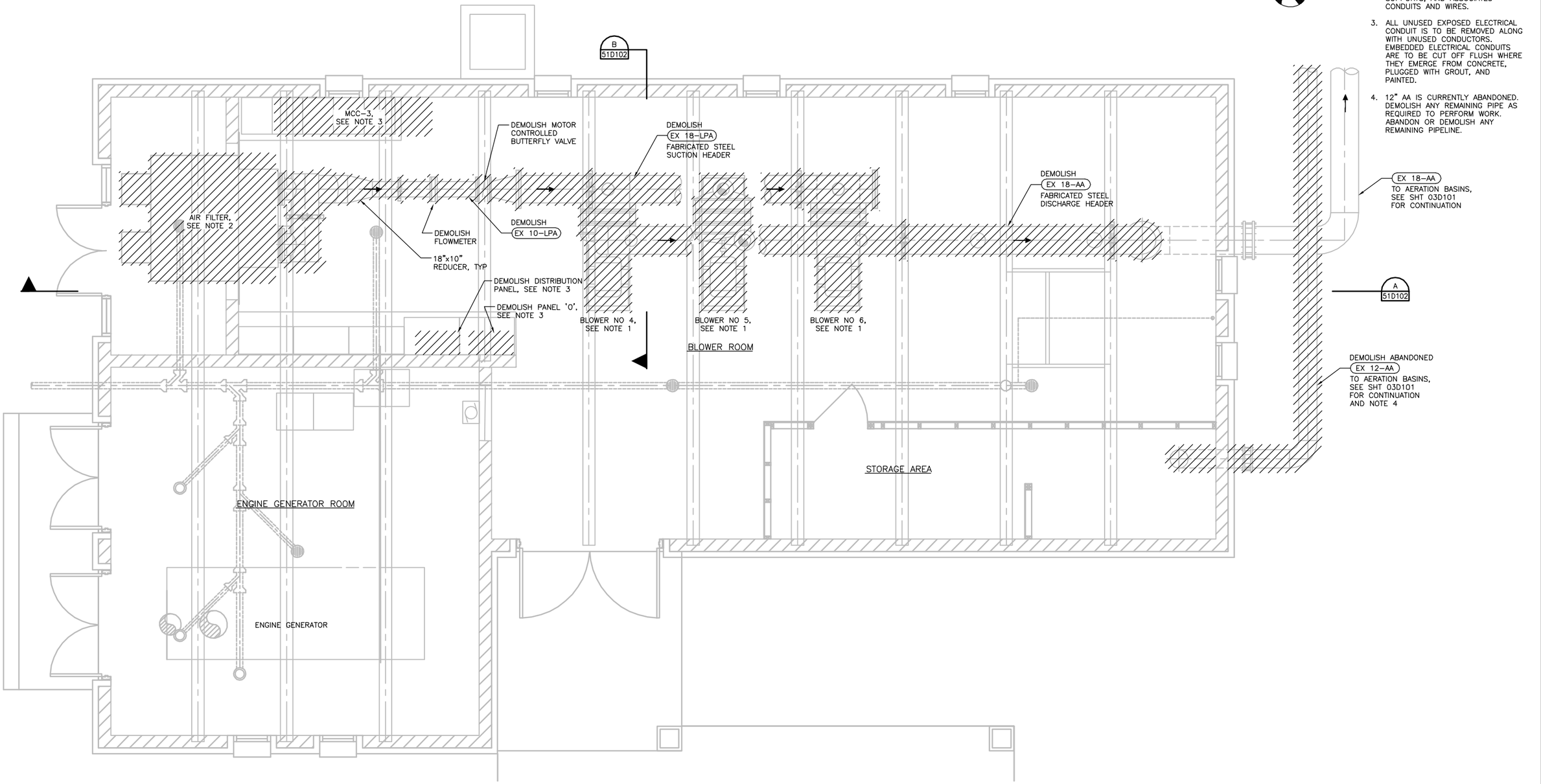

PLAN
3/16" = 1'-0"

FILE: 215786-51D101.dwg
DATE: Oct 06, 2015-3:59:34pm, rsnider

HDR Engineering, Inc.

ISSUE	DATE	DESCRIPTION
A	JUNE 2015	ISSUED FOR BID

PROJECT MANAGER	C. OLSON
DESIGNED	T. KONTONICKAS
DESIGNED	
CHECKED	C. OLSON
DRAWN	B. DOWN
DATE	JUNE 30, 2015
PROJECT NUMBER	215786

REGISTERED PROFESSIONAL ENGINEER
CRAIG A. OLSON
NO. 39819
EXP. 12/31/15
CIVIL
STATE OF CALIFORNIA
06-30-15

CITY OF PINOLE CALIFORNIA 1903

PINOLE/HERCULES
WATER POLLUTION
CONTROL PLANT UPGRADE
CLIENT PN

DEMOLITION

BLOWER BUILDING PLAN

0 1" 2"

FILENAME	215786-51D101
SCALE	NONE

SHEET
51D101

GENERAL NOTES:

1. DEMOLISH CONCRETE EQUIPMENT PADS, BLOWERS, MOTORS, CONDUITS AND WIRES FOR BLOWERS 4, 5 AND 6.
2. DEMOLISH AIR FILTER, CONCRETE SUPPORTS, AND ASSOCIATED CONDUITS AND WIRES.
3. ALL UNUSED EXPOSED ELECTRICAL CONDUIT IS TO BE REMOVED ALONG WITH UNUSED CONDUCTORS. EMBEDDED ELECTRICAL CONDUITS ARE TO BE CUT OFF FLUSH WHERE THEY EMERGE FROM CONCRETE, PLUGGED WITH GROUT, AND PAINTED.

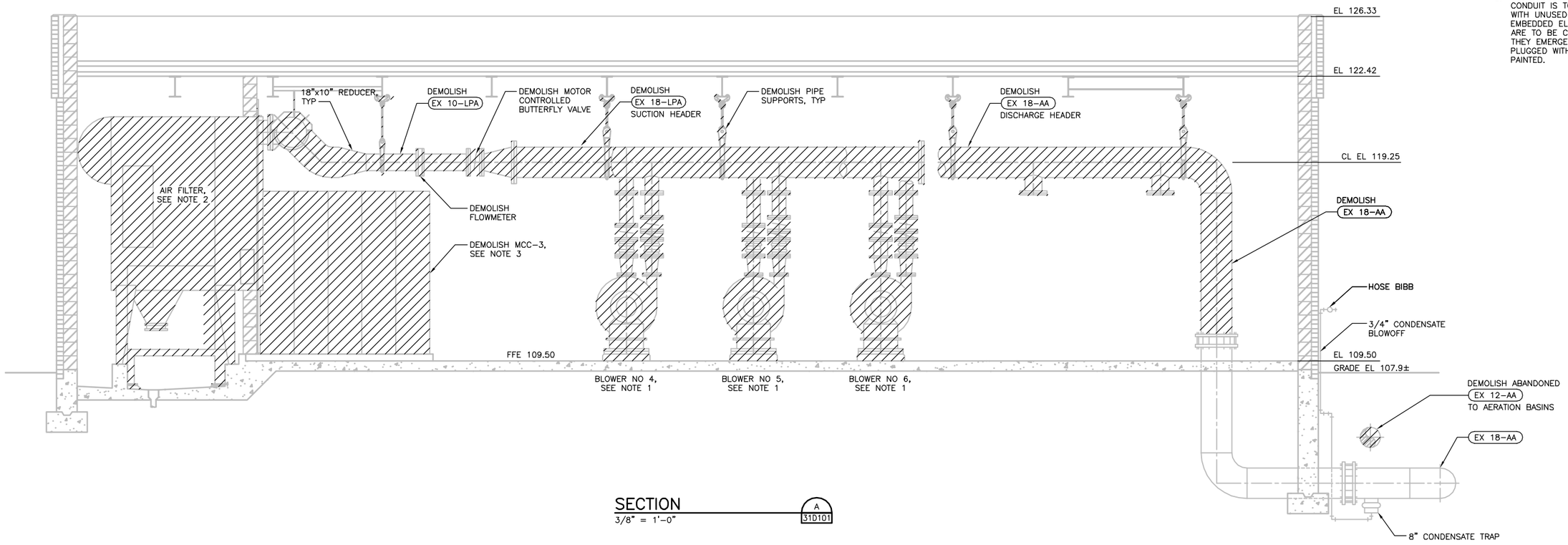

SECTION
3/8" = 1'-0"
A / 31D101

FILE: 215786-51D102.dwg
DATE: Oct 06, 2015-3:59:39pm, rsnider

HDR Engineering, Inc.

ISSUE	DATE	DESCRIPTION
A	JUNE 2015	ISSUED FOR BID

PROJECT MANAGER	C. OLSON
DESIGNED	T. KONTONICKAS
DESIGNED	
CHECKED	C. OLSON
DRAWN	B. DOWN
DATE	JUNE 30, 2015
PROJECT NUMBER	215786

REGISTERED PROFESSIONAL ENGINEER
CRAIG A. OLSON
NO. 39819
EXP. 12/31/15
CIVIL
STATE OF CALIFORNIA
06-30-15

CITY OF PINOLE CALIFORNIA 1903

PINOLE/HERCULES
WATER POLLUTION
CONTROL PLANT UPGRADE
CLIENT PN

DEMOLITION

BLOWER BUILDING SECTIONS

0 1" 2"

FILENAME	215786-51D102
SCALE	AS NOTED

SHEET
51D102

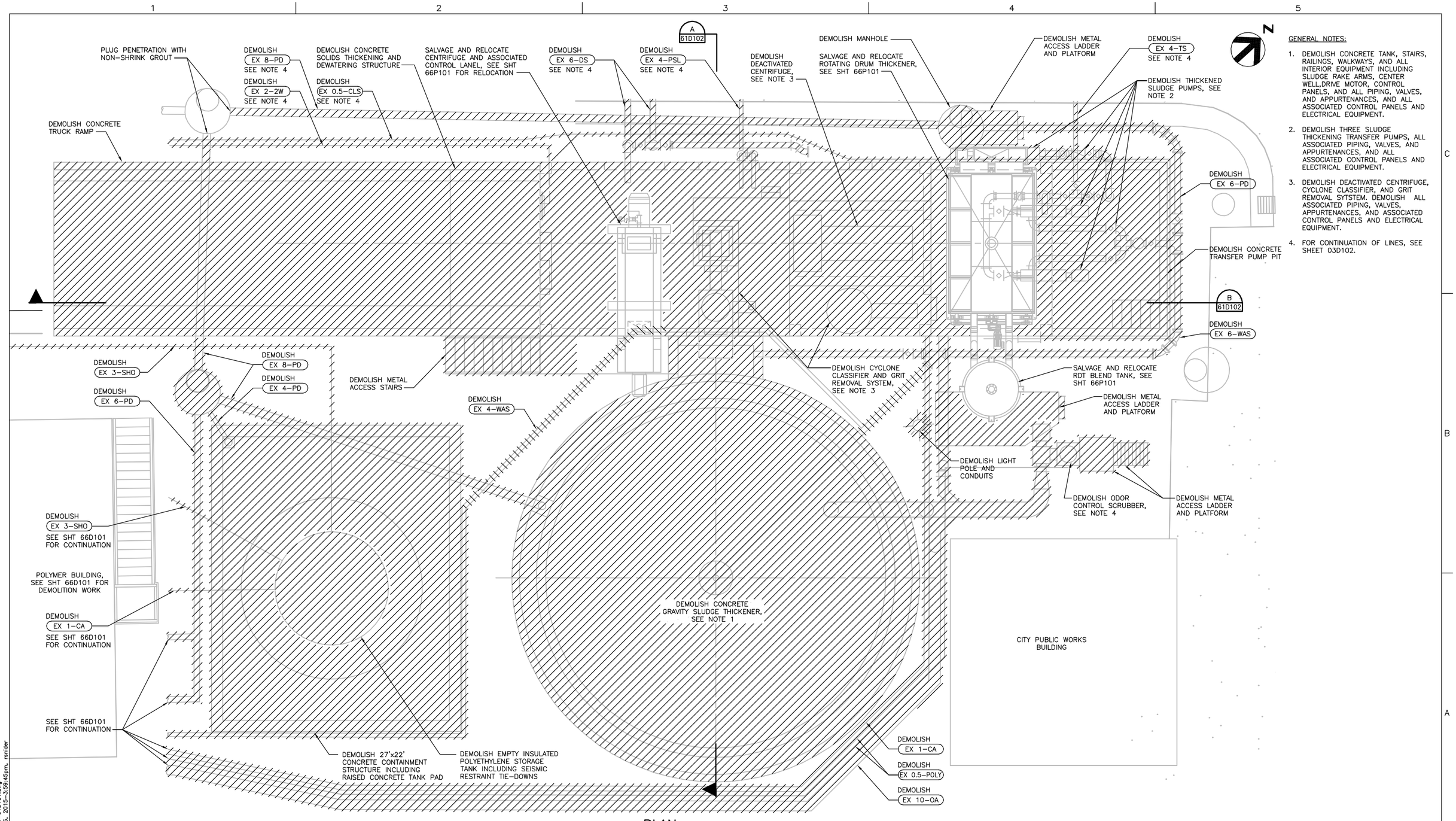

PLAN
1/4" = 1'-0"

GENERAL NOTES:

1. DEMOLISH CONCRETE TANK, STAIRS, RAILINGS, WALKWAYS, AND ALL INTERIOR EQUIPMENT INCLUDING SLUDGE RAKE ARMS, CENTER WELL,DRIVE MOTOR, CONTROL PANELS, AND ALL PIPING, VALVES, AND APPURTENANCES, AND ALL ASSOCIATED CONTROL PANELS AND ELECTRICAL EQUIPMENT.
2. DEMOLISH THREE SLUDGE THICKENING TRANSFER PUMPS, ALL ASSOCIATED PIPING, VALVES, AND APPURTENANCES, AND ALL ASSOCIATED CONTROL PANELS AND ELECTRICAL EQUIPMENT.
3. DEMOLISH DEACTIVATED CENTRIFUGE, CYCLONE CLASSIFIER, AND GRIT REMOVAL SYTSTEM. DEMOLISH ALL ASSOCIATED PIPING, VALVES, APPURTENANCES, AND ASSOCIATED CONTROL PANELS AND ELECTRICAL EQUIPMENT.
4. FOR CONTINUATION OF LINES, SEE SHEET 03D102.

FILE: 215786-61D101.dwg
DATE: Oct 06, 2015-3:59:45pm, rsnider

HDR Engineering, Inc.

ISSUE	DATE	DESCRIPTION
A	JUNE 2015	ISSUED FOR BID

PROJECT MANAGER	C. OLSON
DESIGNED	T. KONTONICKAS
DESIGNED	
CHECKED	C. OLSON
DRAWN	P. VAN MEURS
DATE	JUNE 30, 2015
PROJECT NUMBER	215786

REGISTERED PROFESSIONAL ENGINEER CRAIG A. OLSON NO. 39819 EXP. 12/31/15 CIVIL STATE OF CALIFORNIA 06-30-15

CITY OF PINOLE CALIFORNIA 1903

PINOLE/HERCULES WATER POLLUTION CONTROL PLANT UPGRADE CLIENT PN

DEMOLITION

SOLIDS HANDLING AREA PLAN

0 1" 2"

FILENAME	215786-61D101
SCALE	AS NOTED

SHEET **61D101**

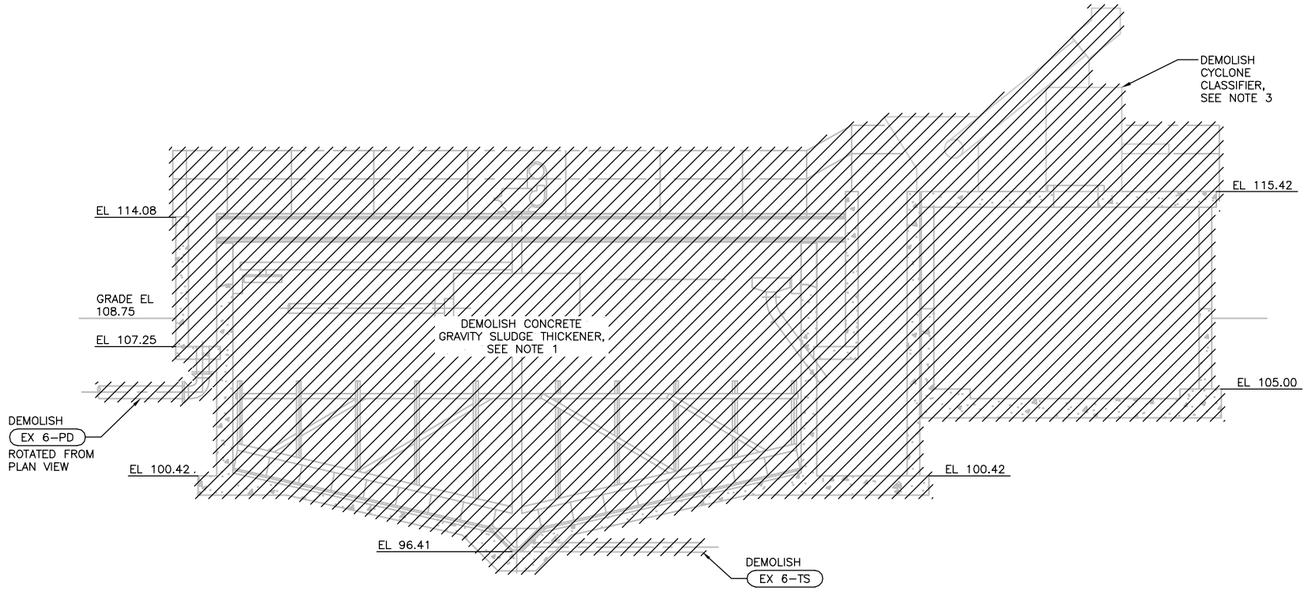

SECTION A
1/4" = 1'-0"
61D101

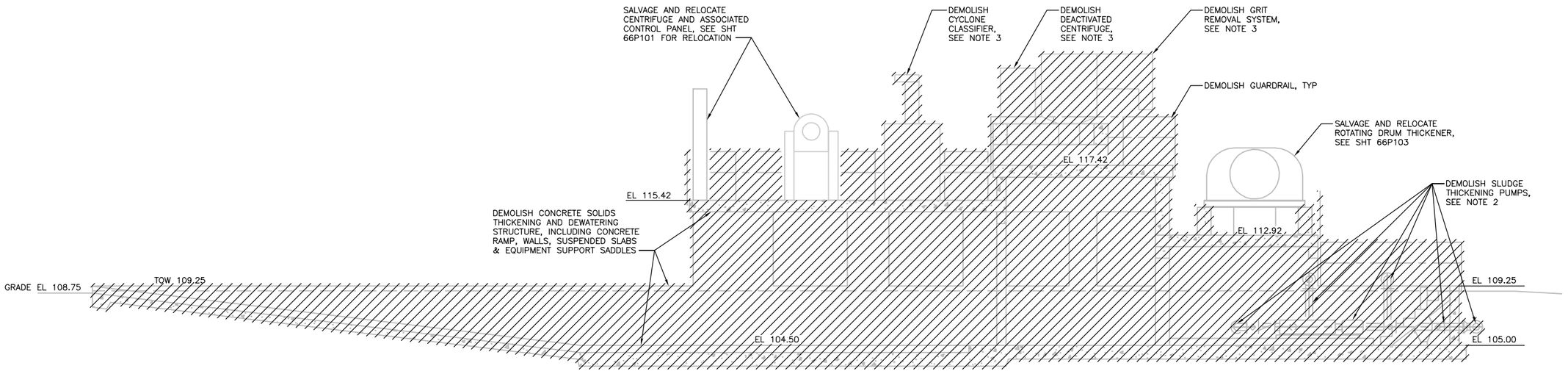

SECTION B
1/4" = 1'-0"
61D101

GENERAL NOTES:

1. DEMOLISH CONCRETE TANK, STAIRS, RAILINGS, WALKWAYS, AND ALL INTERIOR EQUIPMENT INCLUDING FRP COVER PANELS, SLUDGE RAKE ARMS, CENTER WELL, DRIVE MOTOR, CONTROL PANELS, SCUM TROUGH, ALL PIPING, VALVES, AND APPURTENANCES, AND ALL ASSOCIATED CONTROL PANELS AND ELECTRICAL EQUIPMENT.
2. DEMOLISH THREE SLUDGE THICKENING TRANSFER PUMPS, ALL ASSOCIATED PIPING, VALVES, AND APPURTENANCES, AND ALL ASSOCIATED CONTROL PANELS AND ELECTRICAL EQUIPMENT.
3. DEMOLISH CENTRIFUGE AND ROTATING DRUM THICKENER AND ASSOCIATED CONTROL PANELS. DEMOLISH ALL ASSOCIATED PIPING, VALVES, APPURTENANCES, CONDUITS AND WIRING.

FILE: 215786-61D102.dwg
DATE: Oct 06, 2015-3:59:51pm, rsnider

HDR Engineering, Inc.

ISSUE	DATE	DESCRIPTION
A	JUNE 2015	ISSUED FOR BID

PROJECT MANAGER	C. OLSON
DESIGNED	T. KONTONICKAS
DESIGNED	
CHECKED	C. OLSON
DRAWN	P. VAN MEURS
DATE	JUNE 30, 2015
PROJECT NUMBER	215786

REGISTERED PROFESSIONAL ENGINEER
CRAIG A. OLSON
NO. 39819
EXP. 12/31/15
CIVIL
STATE OF CALIFORNIA
06-30-15

CITY OF PINOLE CALIFORNIA 1903

PINOLE/HERCULES
WATER POLLUTION
CONTROL PLANT UPGRADE
CLIENT PN

DEMOLITION

SOLIDS HANDLING AREA SECTIONS

0 1" 2"

FILENAME	215786-61D102
SCALE	AS NOTED

SHEET
61D102

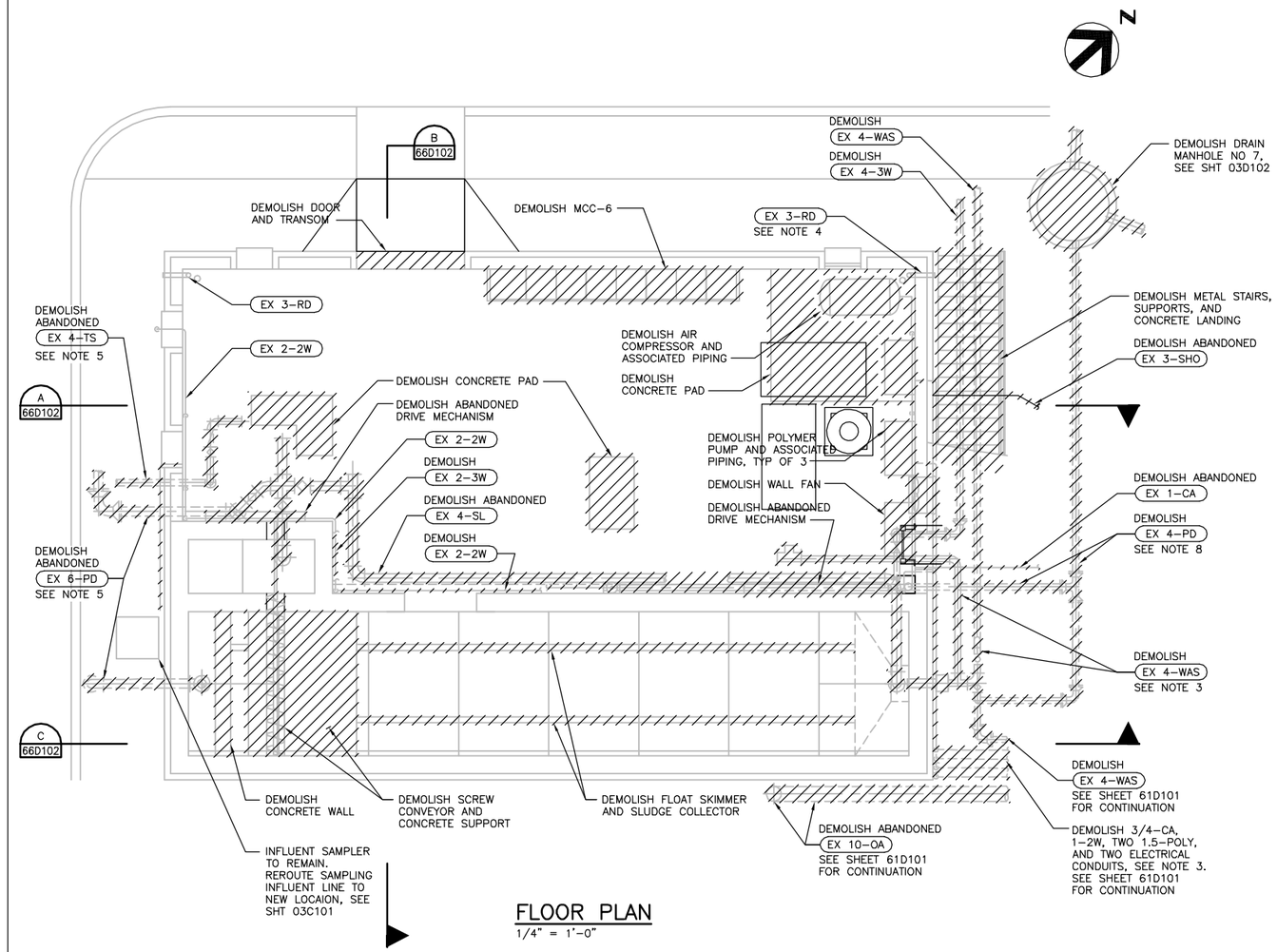

FLOOR PLAN
1/4" = 1'-0"

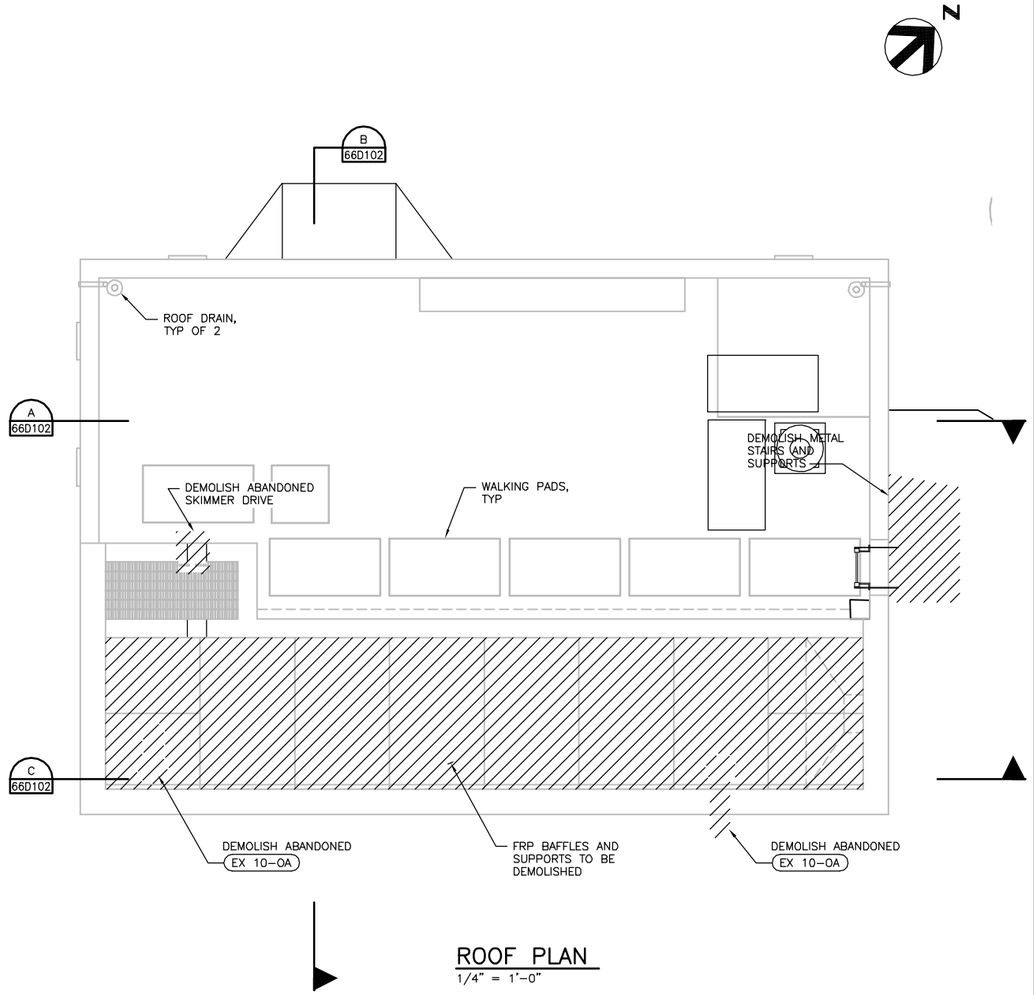

ROOF PLAN
1/4" = 1'-0"

NOTES:

1. CONCRETE PADS TO BE DEMOLISHED TO 4" BELOW NEW FLOOR LEVEL.
2. ALL ELECTRICAL EQUIPMENT, CONDUITS, AND CONDUCTORS ARE TO BE DEMOLISHED.
3. EXISTING PIPING TO BE DEMOLISHED THAT PENETRATES FLOORS SHALL BE CUT 1" ABOVE EXISTING FLOOR AND FILLED WITH CONCRETE. EXISTING PIPING TO BE DEMOLISHED THAT PENETRATES WALLS SHALL BE CUT FLUSH WITH WALL AND FILLED WITH CONCRETE.
4. VERTICAL PORTION OF 3-RD TO REMAIN. REMOVE OUTLET THROUGH WALL AND PLUG OPENING. MODIFY PER SHEET 66P101 TO EXIT THROUGH WEST WALL.
5. EXISTING PIPING LOCATED IN THE YARD TO BE DEMOLISHED SHALL BE CUT AT CONCRETE ENCASEMENT AND REMOVED. THE PORTION OF PIPE REMAINING UNDER THE EXISTING BUILDING SHALL BE FILLED WITH CONCRETE.
6. EXISTING CORE DRILLS THROUGH WALL FOR PIPING TO BE DEMOLISHED SHALL BE FILLED WITH CONCRETE AFTER REMOVAL OF PIPE.
7. PIPES AND EQUIPMENT TO BE DEMOLISHED SHALL INCLUDE ALL SUPPORTS, VALVES, CONDUITS, AND APPURTENANCES.
8. PIPES ON NORTHEAST SIDE OF EXISTING BUILDING SHALL BE CUT FLUSH WITH WALL AND FILLED WITH CONCRETE.
9. EXISTING POLYMER BUILDING (ORIGINALLY BUILT AS THE DISSOLVED AIR FLOTATION THICKENER) SHALL BE USED AS A MAINTENANCE SHOP.

FILE: 215786-66D101.dwg
DATE: Oct 06, 2015-3:59:56pm, rsnider

HDR Engineering, Inc.

ISSUE	DATE	DESCRIPTION
A	JUNE 2015	ISSUED FOR BID

PROJECT MANAGER	C. OLSON
DESIGNED	T. KONTONICKAS
DESIGNED	
CHECKED	C. OLSON
DRAWN	M. FOYLE
DATE	JUNE 30, 2015
PROJECT NUMBER	215786

REGISTERED PROFESSIONAL ENGINEER CRAIG A. OLSON NO. 39819 EXP. 12/31/15 CIVIL STATE OF CALIFORNIA 06-30-15

CITY OF PINOLE CALIFORNIA 1903

PINOLE/HERCULES WATER POLLUTION CONTROL PLANT UPGRADE CLIENT PN

DEMOLITION

POLYMER BUILDING PLAN

0 1" 2"

FILENAME	215786-66D101
SCALE	AS NOTED

SHEET **66D101**

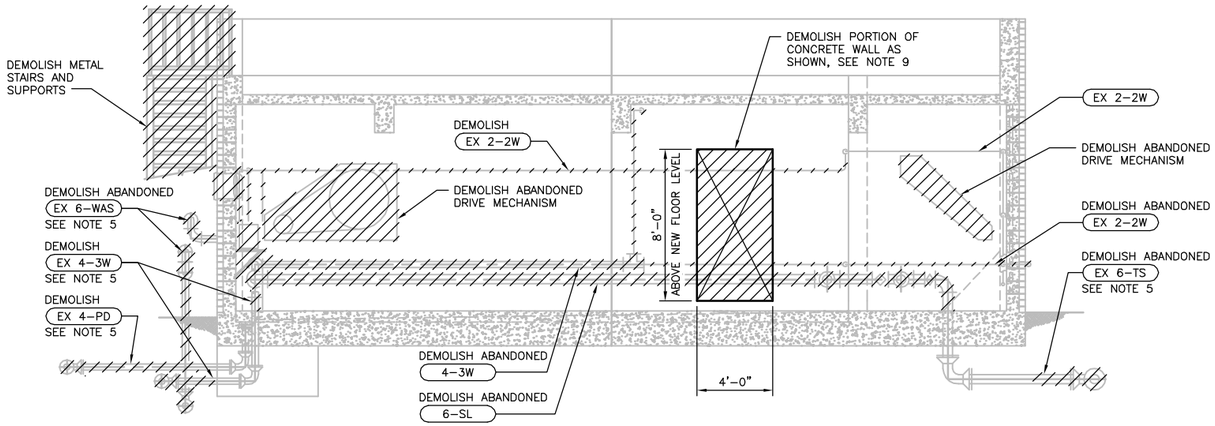

SECTION
1/4" = 1'-0"
A 66D101

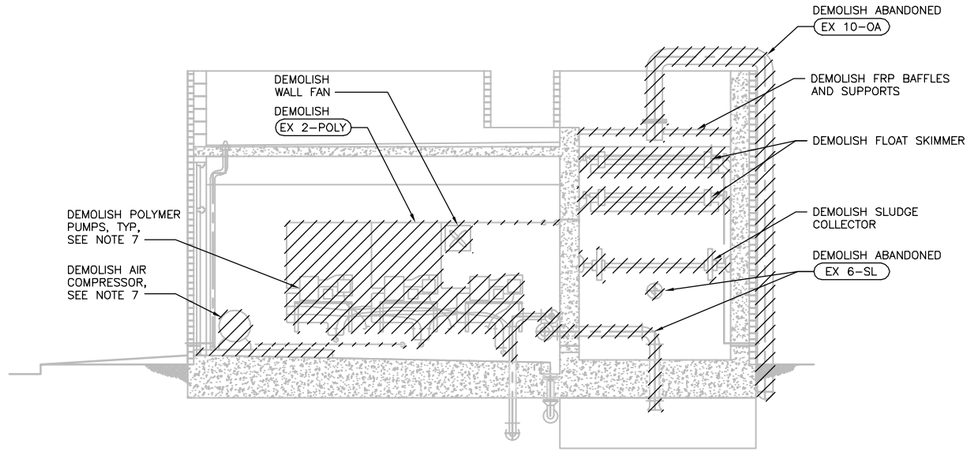

SECTION
1/4" = 1'-0"
B 66D101

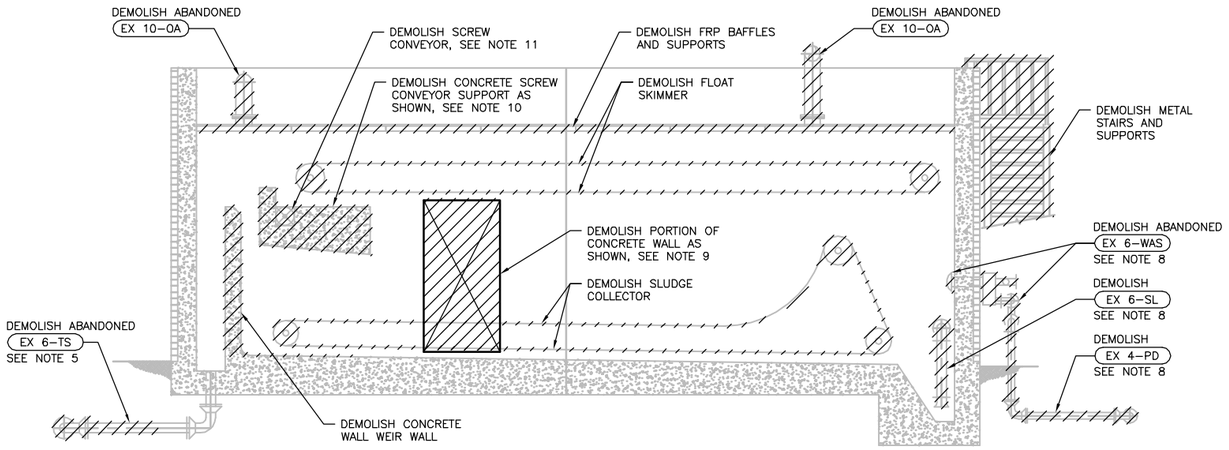

SECTION
1/4" = 1'-0"
C 66D101

NOTES:

1. CONCRETE PADS TO BE DEMOLISHED TO 4" BELOW NEW FLOOR LEVEL.
2. ALL ELECTRICAL EQUIPMENT, CONDUITS, AND CONDUCTORS ARE TO BE DEMOLISHED.
3. EXISTING PIPING TO BE DEMOLISHED THAT PENETRATES FLOORS SHALL BE CUT 1" ABOVE EXISTING FLOOR AND FILLED WITH CONCRETE. EXISTING PIPING TO BE DEMOLISHED THAT PENETRATES WALLS SHALL BE CUT FLUSH WITH WALL AND FILLED WITH CONCRETE.
4. VERTICAL PORTION OF 3" RD TO REMAIN. REMOVE OUTLET THROUGH WALL AND PLUG OPENING. MODIFY PER SHEET 66P101 TO EXIT THROUGH WEST WALL.
5. EXISTING PIPING LOCATED IN THE YARD TO BE DEMOLISHED SHALL BE CUT AT CONCRETE ENCASEMENT AND REMOVED. THE PORTION OF PIPE REMAINING UNDER THE EXISTING BUILDING SHALL BE FILLED WITH CONCRETE.
6. EXISTING CORE DRILLS THROUGH WALL FOR PIPING TO BE DEMOLISHED SHALL BE FILLED WITH CONCRETE AFTER REMOVAL OF PIPE.
7. PIPES AND EQUIPMENT TO BE DEMOLISHED SHALL INCLUDE ALL SUPPORTS, VALVES, CONDUITS, AND APPURTENANCES.
8. PIPES ON NORTHEAST SIDE OF EXISTING BUILDING SHALL BE CUT FLUSH WITH WALL AND FILLED WITH CONCRETE.
9. SAWCUT OPENING IN WALL AS SHOWN TO CREATE ROUGH OPENING FOR NEW DOORWAY. USE CEMENT GROUT TO SMOOTH SURFACES.
10. DEMOLISH EXISTING CONCRETE SUPPORT FOR SCREW CONVEYOR. USE CEMENT GROUT TO SMOOTH SURFACES.
11. AFTER REMOVING SCREW CONVEYOR, FILL OPENING IN WALL WITH CONCRETE.

FILE: 215786-66D102.dwg
DATE: Oct 06, 2015-4:00:02pm, rsnider

HDR
HDR Engineering, Inc.

ISSUE	DATE	DESCRIPTION
A	JUNE 2015	ISSUED FOR BID

PROJECT MANAGER	C. OLSON
DESIGNED	T. KONTONICKAS
DESIGNED	
CHECKED	C. OLSON
DRAWN	M. FOYLE
DATE	JUNE 30, 2015
PROJECT NUMBER	215786

REGISTERED PROFESSIONAL ENGINEER
CRAIG A. OLSON
NO. 39819
EXP. 12/31/15
CIVIL
STATE OF CALIFORNIA
04-30-15

CITY OF PINOLE CALIFORNIA 1903

PINOLE/HERCULES
WATER POLLUTION
CONTROL PLANT UPGRADE
CLIENT PN

DEMOLITION

POLYMER BUILDING SECTIONS

0 1" 2"

FILENAME	215786-66D102
SCALE	AS NOTED

SHEET
66D102

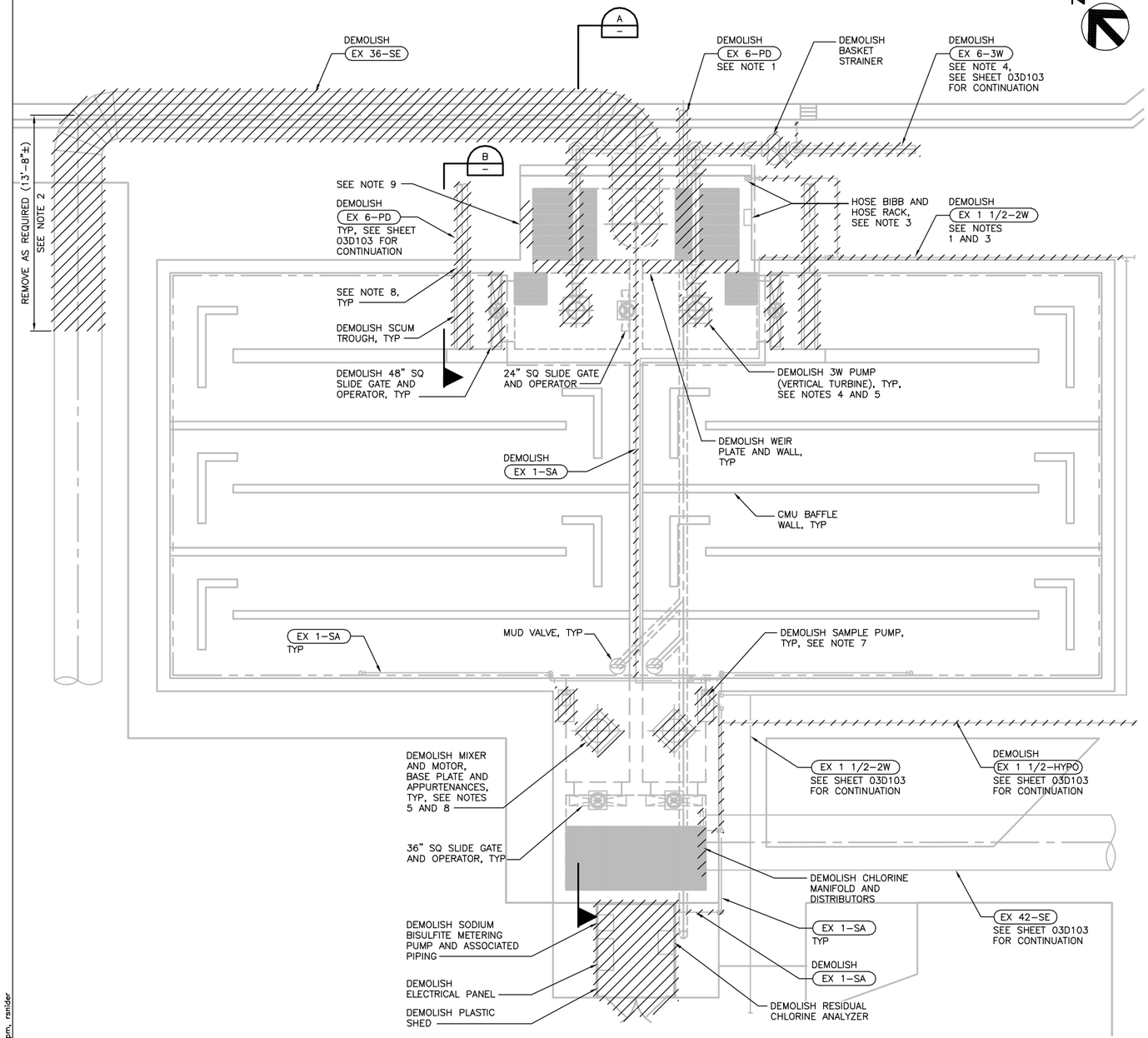

PLAN
1/4" = 1'-0"

NOTES:

1. DEMOLISH PIPELINE UP TO LIMITS INDICATED. RECONNECT PIPELINE AS SHOWN ON 03C101.
2. SEE SHEET 71P101 FOR 36-FE TEMPORARY BYPASS PIPE LOCATION.
3. RELOCATE 1.5-2W AS REQUIRED TO ACCOMMODATE NEW CONSTRUCTION. HOSE BIBB, VALVE, RACK AND HOSE TO REMAIN IN PLACE.
4. SEE SHEETS 71P102 AND 03C103 FOR NEW 3W SYSTEM AND PIPING CONNECTION.
5. FILL SLAB OPENING WITH CONCRETE, SEE STRUCTURAL STANDARD DETAILS.
6. SEE SHEET 71S102 FOR GUARDRAIL MODIFICATIONS.
7. SAWCUT EXISTING MAT FOUNDATION TO BE FLUSH WITH WALL ABOVE.
8. FILL EXISTING OPENING PER DETAIL F ON SHEET 71S103.
9. MAKE 36" DIA TEMPORARY PIPE PENETRATION BY CORE DRILLING MULTIPLE CONNECTED HJOLES OF SMALLER SIZE AROUND THE 36" DIA CIRCLE PERIMETER FROM OUSIDE OF WALL. OVERCUT EXPOSED REBARS TO 2" BELOW CUT SURFACE. APPLY EPOXY AND SEAL AT EACH RECESSED REBAR DEPRESSION. SEE DETAIL E ON SHEET 71S04 FOR NEW WALL CONSTURTION. WALL CONSTRUCTION SHALL BE COMPLETED BEFORE PIPE PENETRATION DRILLING TAKES PLACE.

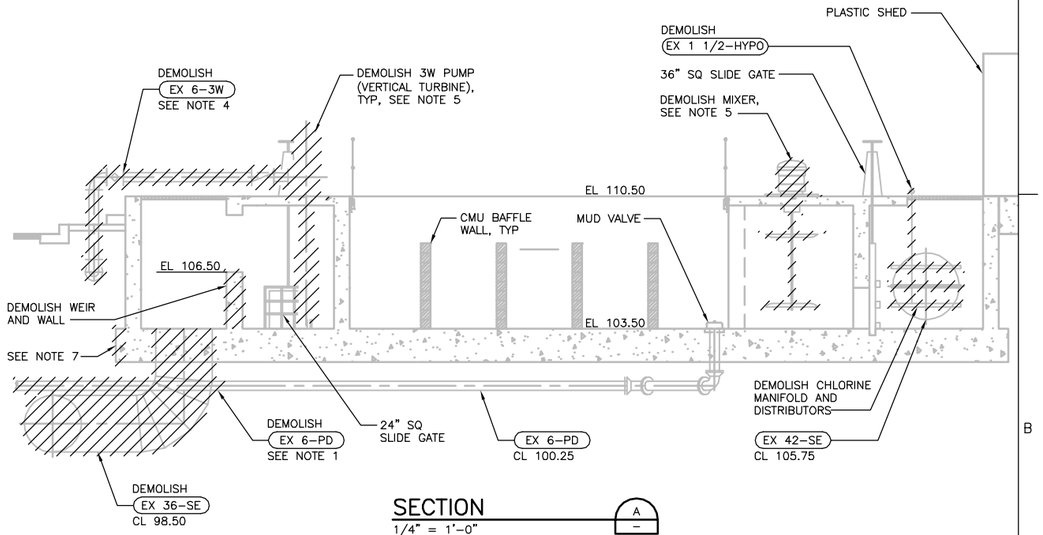

SECTION
1/4" = 1'-0"
A

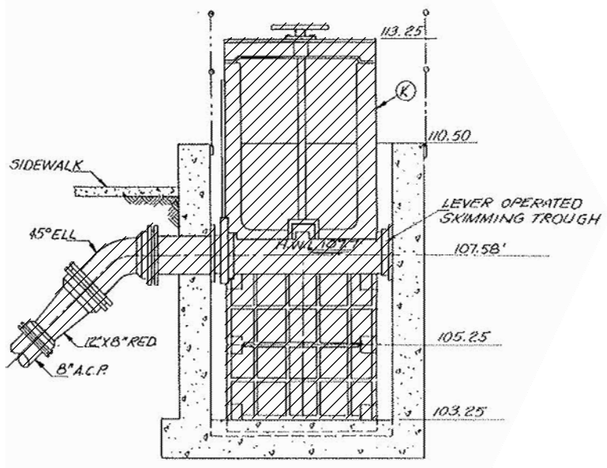

SECTION
3/8" = 1'-0"
B

A	JUNE 2015	ISSUED FOR BID
ISSUE	DATE	DESCRIPTION

PROJECT MANAGER	C. OLSON
DESIGNED	M. PERINPANAYAGAM
DESIGNED	
CHECKED	C. OLSON
DRAWN	B. DOWN
DATE	JUNE 30, 2015
PROJECT NUMBER	215786

REGISTERED PROFESSIONAL ENGINEER
CRAIG A. OLSON
NO. 39819
EXP. 12/31/15
CIVIL
STATE OF CALIFORNIA
06-30-15

HDR Engineering, Inc.

PINOLE/HERCULES
WATER POLLUTION
CONTROL PLANT UPGRADE
CLIENT PN

DEMOLITION

CHLORINE CONTACT BASINS
PLAN AND SECTIONS

0 1" 2"

FILENAME	215786-71D101
SCALE	AS NOTED

SHEET
71D101

FILE: 215786-71D101.dwg
DATE: Oct 06, 2015-4:00:09pm, rsnider

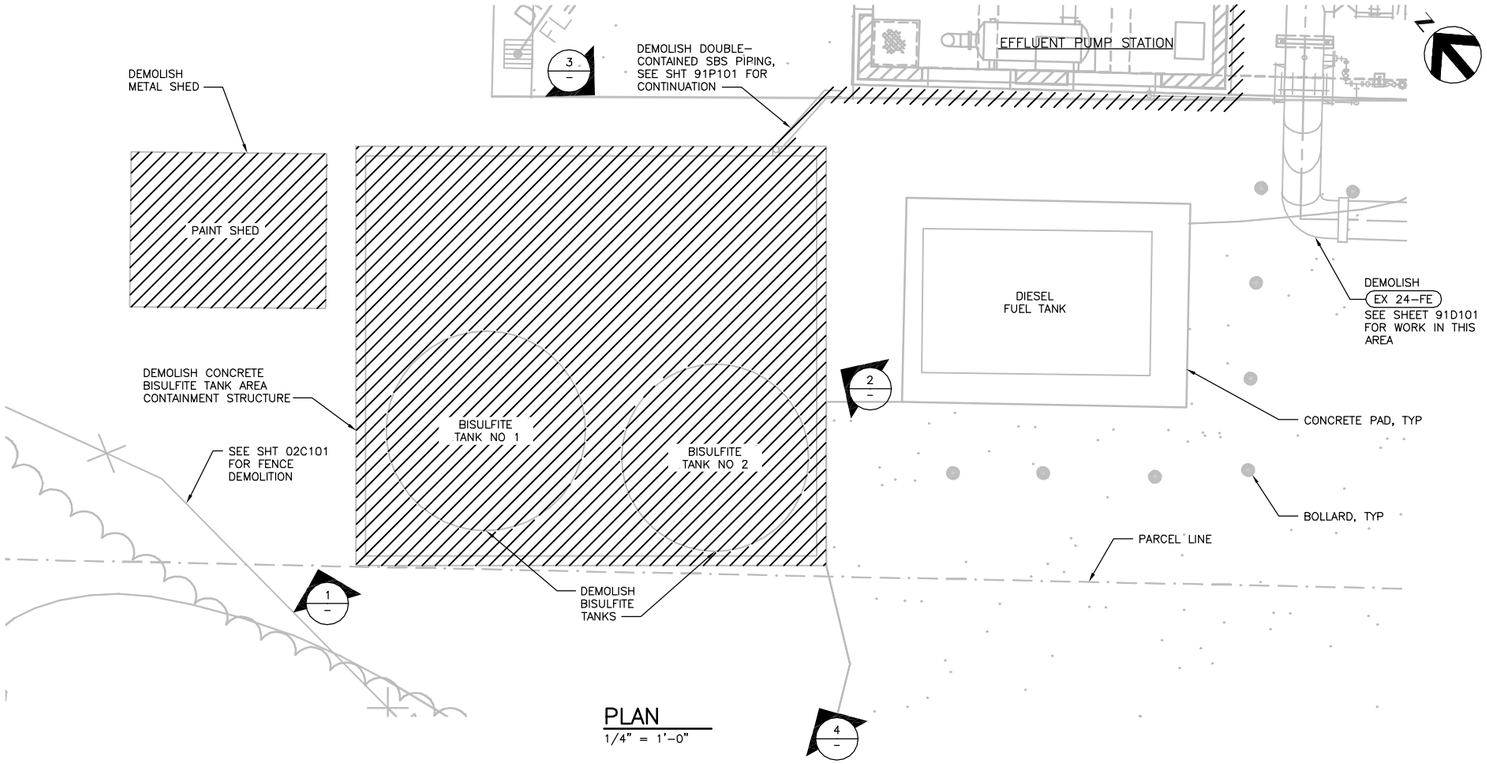

PLAN
1/4" = 1'-0"

GENERAL NOTES:

1. DEMOLISH PIPELINE UP TO LIMITS INDICATED. RECONNECT PIPELINE AS SHOWN ON 03C101.



PHOTOGRAPH 1
NTS



PHOTOGRAPH 2
NTS



PHOTOGRAPH 3
NTS

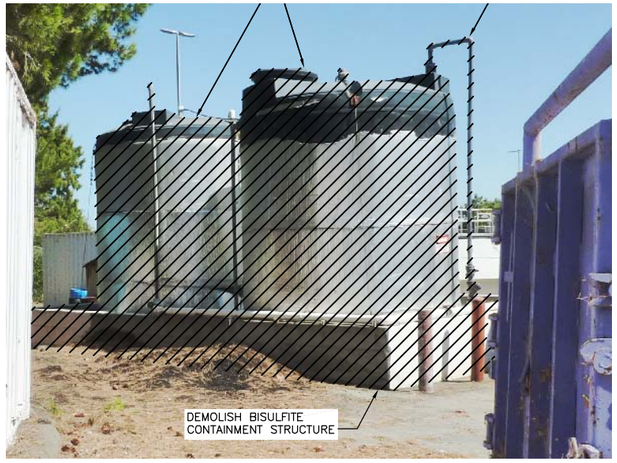

PHOTOGRAPH 4
NTS

FILE: 215786-75D101.dwg
DATE: Oct 06, 2015-4:00:16pm, rsnider

HDR Engineering, Inc.

ISSUE	DATE	DESCRIPTION
A	JUNE 2015	ISSUED FOR BID

PROJECT MANAGER	C. OLSON
DESIGNED	T. KONTONICKAS
DESIGNED	
CHECKED	C. OLSON
DRAWN	B. DOWN
DATE	JUNE 30, 2015
PROJECT NUMBER	215786

REGISTERED PROFESSIONAL ENGINEER
CRAIG A. OLSON
NO. 39819
EXP. 12/31/15
CIVIL
STATE OF CALIFORNIA
06-30-15

CITY OF PINOLE CALIFORNIA 1903

PINOLE/HERCULES
WATER POLLUTION
CONTROL PLANT UPGRADE
CLIENT PN

DEMOLITION

BISULFITE STORAGE AREA PLAN AND PHOTOGRAPHS

0 1" 2"

FILENAME	215786-75D101
SCALE	AS NOTED

SHEET
75D101

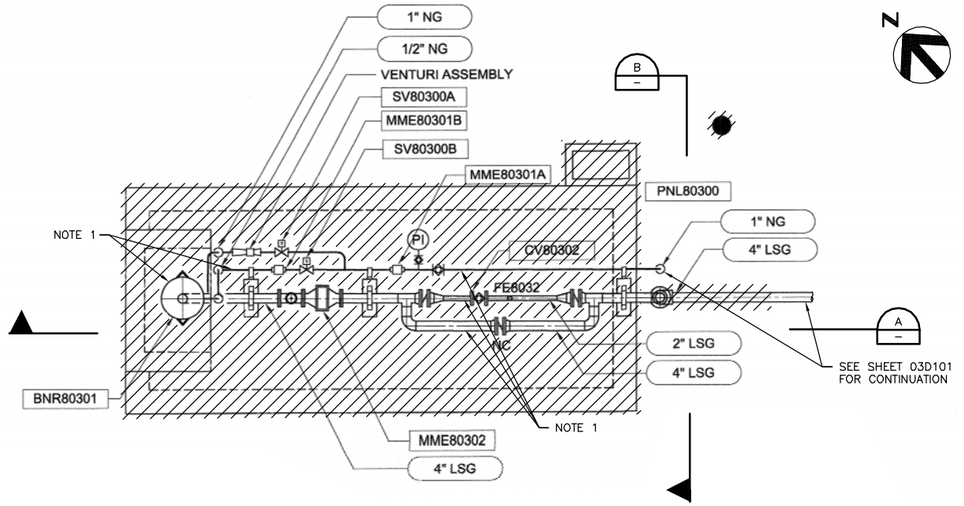

PLAN
3/8" = 1'-0"

1

NOTES:

1. ABOVE GROUND PIPING, EQUIPMENT AND ELECTRICAL PORTIONS OF DIGESTER GAS BURNER SYSTEM TO BE REMOVED AND RELOCATED, SEE SHEET 85S101, 85P101, 85E101 AND 85I101. PRIOR TO DISASSEMBLY CONTRACTOR TO AS-BUILT EXISTING SYSTEM, INCLUDING ALL PIPING, EQUIPMENT, CONTROLS, ELECTRICAL AND SUPPORTS SO SYSTEM CAN BE REASSEMBLED AND WIRED TO FUNCTION AS IT WAS PRIOR TO DISASSEMBLY.

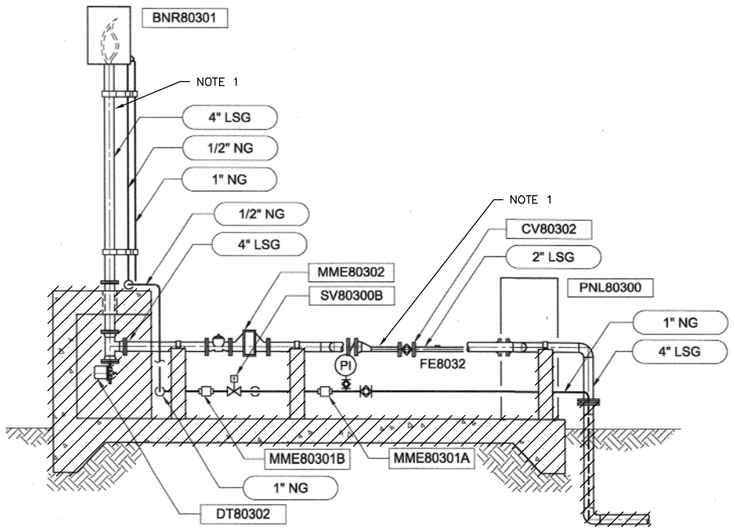

SECTION
3/8" = 1'-0"

A

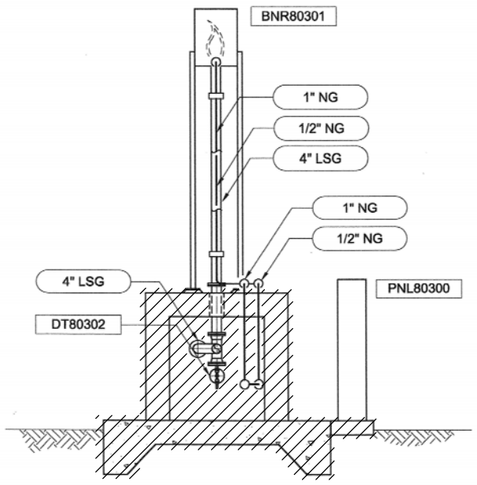

SECTION
3/8" = 1'-0"

B



PHOTOGRAPH
NTS

1

FILE: 215786-85D101.dwg
DATE: Oct 06, 2015-4:00:26pm, rsnider

HDR Engineering, Inc.

ISSUE	DATE	DESCRIPTION
A	JUNE 2015	ISSUED FOR BID

PROJECT MANAGER	C. OLSON
DESIGNED	T. KONTONICKAS
DESIGNED	
CHECKED	C. OLSON
DRAWN	B. DOWN
DATE	JUNE 30, 2015
PROJECT NUMBER	215786

REGISTERED PROFESSIONAL ENGINEER
CRAIG A. OLSON
NO. 39819
EXP. 12/31/15
CIVIL
STATE OF CALIFORNIA
06-30-15

CITY OF PINOLE CALIFORNIA 1903

PINOLE/HERCULES
WATER POLLUTION
CONTROL PLANT UPGRADE
CLIENT PN

DEMOLITION

DIGESTER GAS BURNER
PLAN, PHOTO, AND SECTIONS

0 1" 2"

FILENAME	215786-85D101
SCALE	AS NOTED

SHEET
85D101

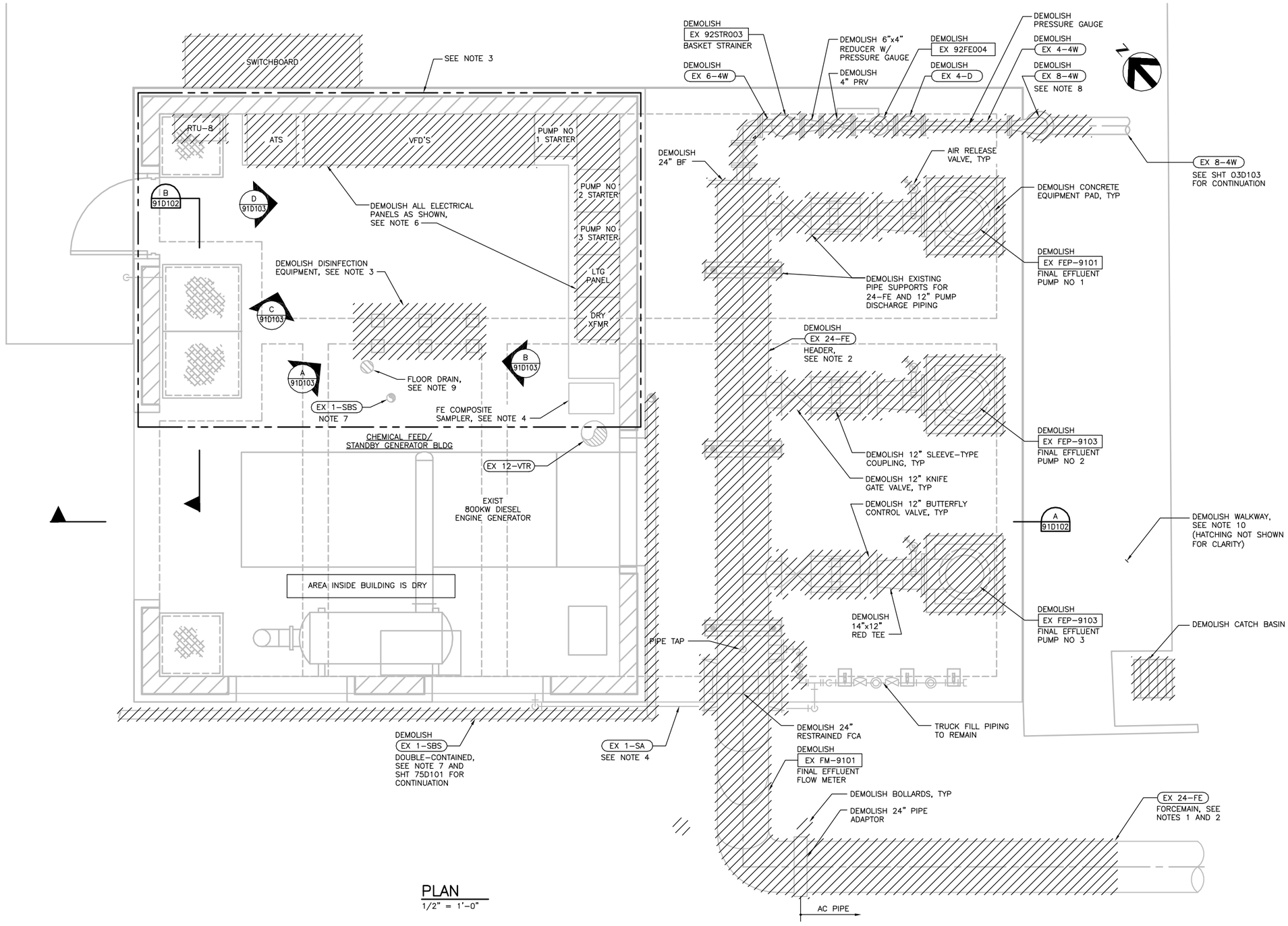

PLAN
1/2" = 1'–0"

GENERAL NOTES:

1. DEMOLISH PIPELINE UP TO LIMITS INDICATED. RE–CONNECT PIPELINE AS SHOWN ON 03C105 AND 91P102.
2. SNAP CUT AC PIPE AND REMOVE TO POINT SHOWN. SEE APWA FOR SAFE HANDLING AND DISPOSAL PROCEDURES.
3. DEMOLISH BISULFITE PUMPS, ANALYZERS, ASSOCIATED PIPING AND EQUIPMENT, AND SUPPORT PANEL. PROTECT SAMPLE PENETRATION THROUGH SLAB FOR REUSE WITH NEW ANALYZERS.
4. RECONNECT 1–SA LINE FROM COMPOSITE SAMPLER TO NEW 24–FE HEADER, SEE SHEET 91P102.
5. NOT ALL PIPING INSIDE CHEMICAL FEED/STANDBY GENERATOR BUILDING IS SHOWN.
6. ALL UNUSED EXPOSED ELECTRICAL CONDUIT IS TO BE REMOVED ALONG WITH UNUSED CONDUCTORS. EMBEDDED ELECTRICAL CONDUITS ARE TO BE CUT OFF FLUSH WHERE THEY EMERGE FROM CONCRETE, PLUGGED WITH GROUT, AND PAINTED.
7. DEMOLISH SBS PIPING ON ROOF AND PLUG ROOF PENETRATION.
8. DEMOLISH 8" AS NECESSARY TO PERFORM WORK ON SHEET 91P102.
9. EXISTING FLOOR DRAIN TO BE PROTECTED IN PLACE.
10. DEMOLISH WALKWAY ON SOUTHEAST AND NORTHEAST SIDE OF EFFLUENT PUMP STATION STRUCTURE.

FILE: 215786–91D101.dwg
DATE: Oct 06, 2015–4:00:35pm, rsnider

HDR Engineering, Inc.

ISSUE	DATE	DESCRIPTION
A	JUNE 2015	ISSUED FOR BID

PROJECT MANAGER	C. OLSON
DESIGNED	M. BECK
DESIGNED	M. PERINPANAYAGAM
CHECKED	D. HUNT
DRAWN	M. FOYLE
DATE	JUNE 30, 2015
PROJECT NUMBER	215786

REGISTERED PROFESSIONAL ENGINEER CRAIG A. OLSON NO. 39819 EXP. 12/31/15 CIVIL STATE OF CALIFORNIA

PINOLE/HERCULES WATER POLLUTION CONTROL PLANT UPGRADE CLIENT PN

DEMOLITION

EFFLUENT PUMP STATION UPPER LEVEL PLAN

0 1" 2"

FILENAME	215786–91D101
SCALE	AS NOTED

SHEET 91D101

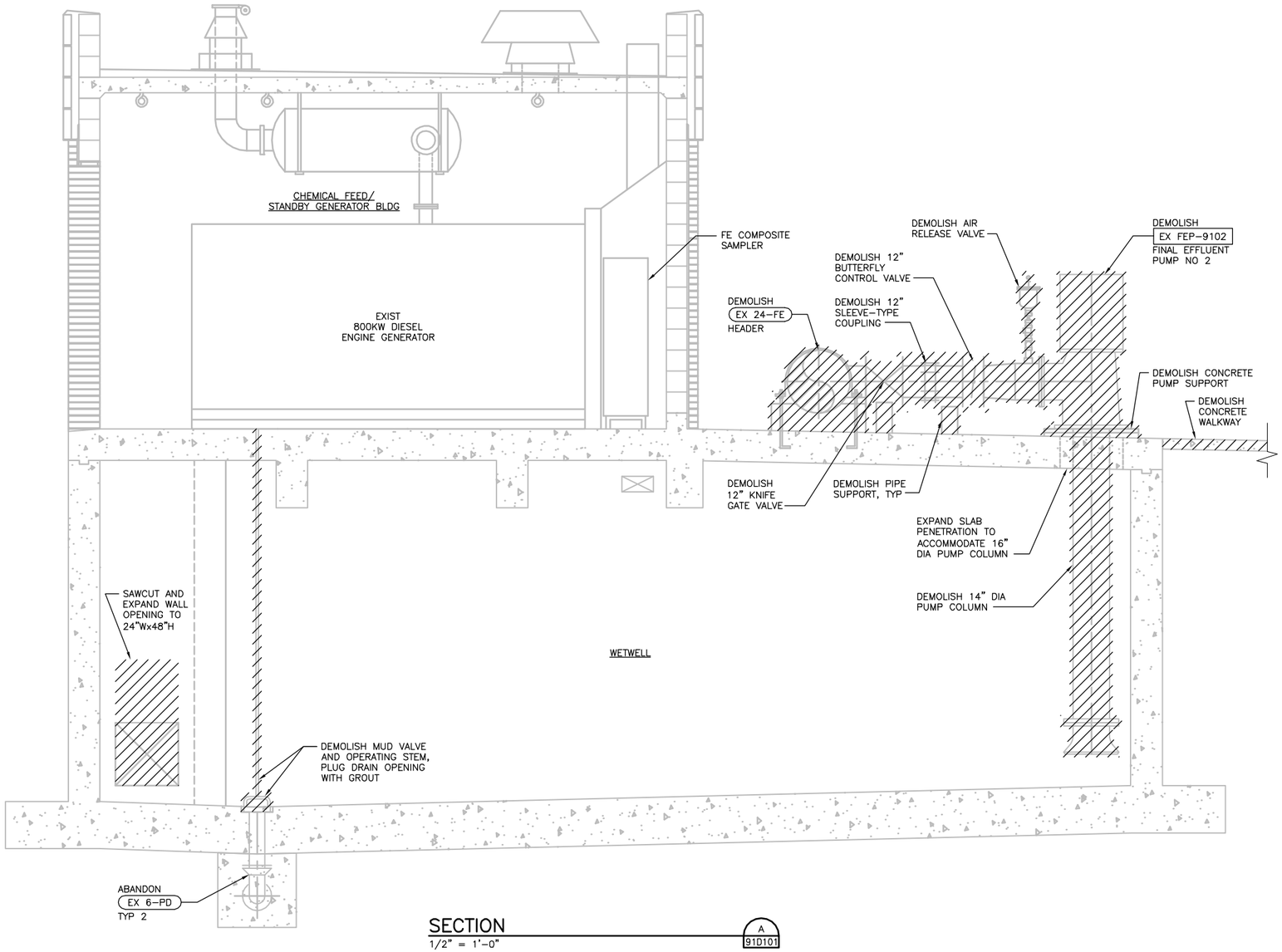

SECTION
1/2" = 1'-0"
A
91D101

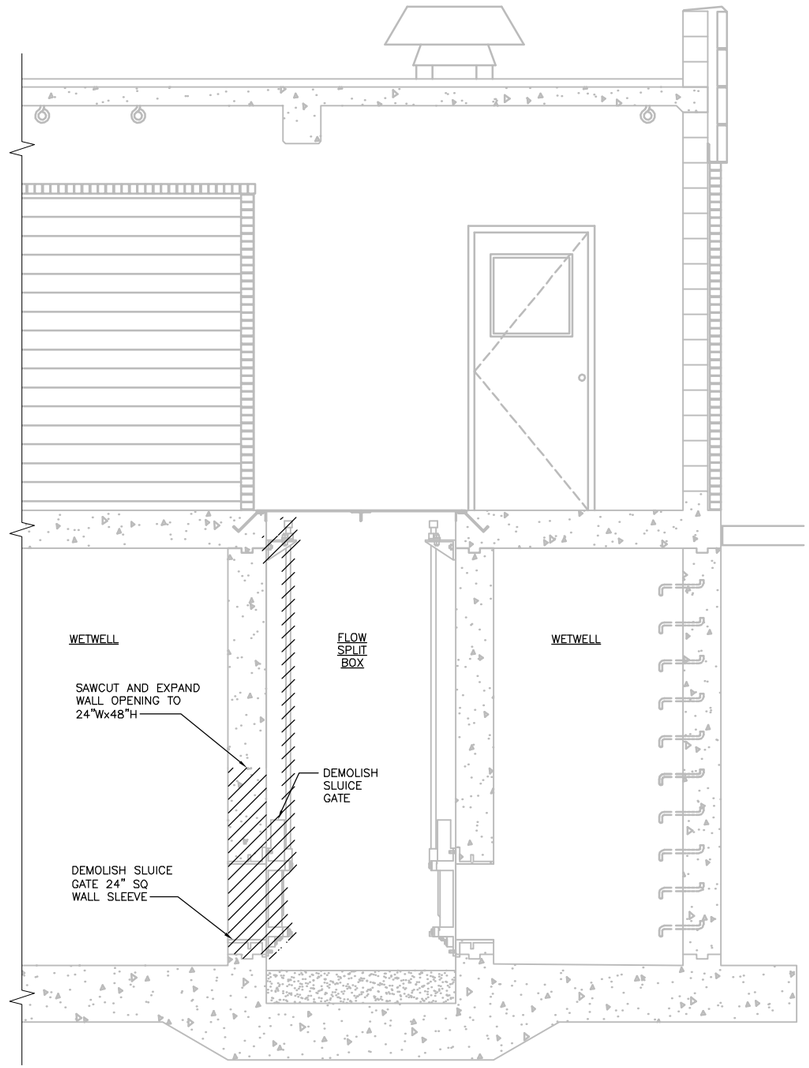

SECTION
1/2" = 1'-0"
B
91D101

FILE: 215786-91D102.dwg
DATE: Oct 06, 2015-4:00:41pm, renider

HDR Engineering, Inc.

ISSUE	DATE	DESCRIPTION
A	JUNE 2015	ISSUED FOR BID

PROJECT MANAGER	C. OLSON
DESIGNED	M. BECK
DESIGNED	M. PERINPANAYAGAM
CHECKED	D. HUNT
DRAWN	M. FOYLE
DATE	JUNE 30, 2015
PROJECT NUMBER	215786

REGISTERED PROFESSIONAL ENGINEER
CRAIG A. OLSON
NO. 39819
EXP. 12/31/15
CIVIL
STATE OF CALIFORNIA
06-30-15

CITY OF PINOLE CALIFORNIA 1903

PINOLE/HERCULES
WATER POLLUTION
CONTROL PLANT UPGRADE
CLIENT PN

DEMOLITION

EFFLUENT PUMP STATION SECTIONS

0 1" 2"

FILENAME	215786-91D102
SCALE	AS NOTED

SHEET
91D102

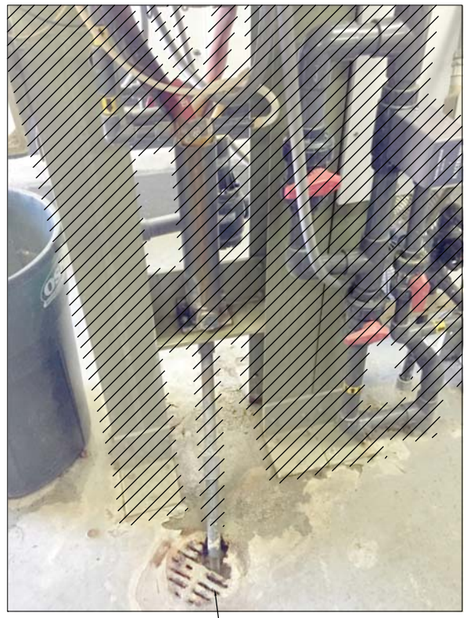

DRAIN FROM ANALYZERS, FLOOR DRAIN TO REMAIN

PHOTOGRAPH A 91D101
NO SCALE



DISCONNECT FROM EXISTING SBS METERING PUMP AND CONNECT TO NEW SBS METERING PUMP DISCHARGE PIPE

SBS PIPE TO REMAIN

PHOTOGRAPH B 91D101
NO SCALE



EXISTING ELECTRICAL PANELS TO BE REMOVED

PROTECT IN PLACE EXISTING CONCRETE HOUSEKEEPING PAD

PHOTOGRAPH C 91D101
NO SCALE

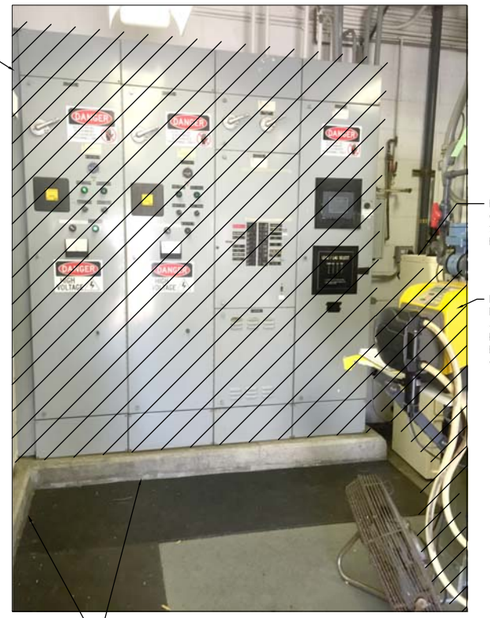

EXISTING MCC SECTIONS TO BE REMOVED

FINAL EFFLUENT COMPOSITE SAMPLER TO REMAIN IN PLACE

DEMOLISH SBS METERING PUMP & ASSOCIATED PIPING & ELECTRICAL COMPONENTS

PROTECT IN PLACE EXISTING CONCRETE HOUSEKEEPING PAD

PHOTOGRAPH D 91D101
NO SCALE

FILE: 215786-91D103.dwg
DATE: Oct 06, 2015-4:00:47pm, rsnider

HDR Engineering, Inc.

ISSUE	DATE	DESCRIPTION
A	JUNE 2015	ISSUED FOR BID

PROJECT MANAGER	C. OLSON
DESIGNED	M. PERINPANAYAGAM
DESIGNED	M. BECK
CHECKED	C. OLSON
DRAWN	P. VAN MEURS
DATE	JUNE 30, 2015
PROJECT NUMBER	215786

REGISTERED PROFESSIONAL ENGINEER
CRAIG A. OLSON
NO. 39819
EXP. 12/31/15
CIVIL
STATE OF CALIFORNIA
06-30-15

CITY OF PINOLE CALIFORNIA 1903

PINOLE/HERCULES
WATER POLLUTION
CONTROL PLANT UPGRADE
CLIENT PN

DEMOLITION

EFFLUENT PUMP STATION PHOTOS AND NOTES

0 1" 2"

FILENAME	215786-91D103
SCALE	AS NOTED

SHEET
91D103

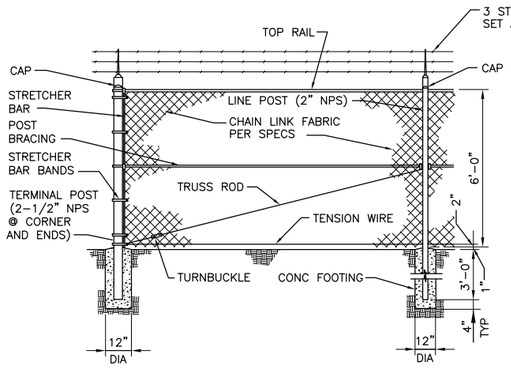

GATE POST SCHEDULE	
LEAF SPAN	NOMINAL DIAMETER
≤ 6'	3"
6'–12'	5"
12'–18'	6"
18'–24'	8"

NOTES:

1. SINGLE LEAF GATES TO BE REINFORCED SIMILAR TO DOUBLE SWING GATE DETAIL.
2. FINISHED GRADE PER SITE GRADING.
3. GATE FABRIC TO MATCH THAT USED IN FENCE. SEE PROJECT SPECIFICATIONS.
4. APPLY ASTM F668, CLASS 2B BLACK VINYL COATING TO ENTIRE FENCE ASSEMBLY.
5. ENTIRE FENCE ASSEMBLY TO BE BLACK VINYL COATED.

CHAIN LINK FENCE

1

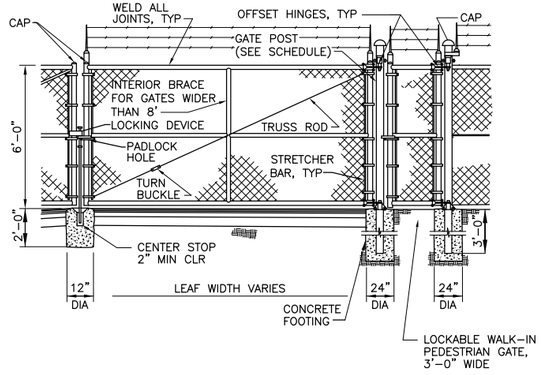

CHAIN LINK FENCE & GATE

1

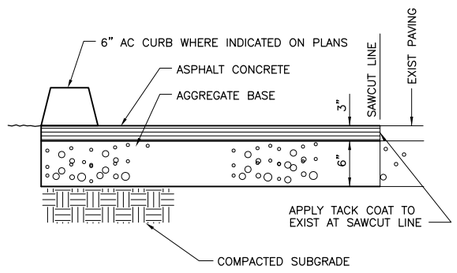

PAVING DETAIL

2

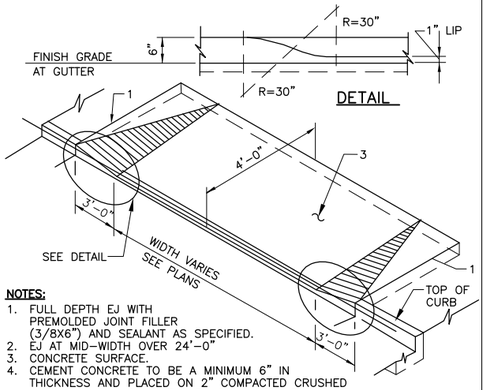

NOTES:

1. FULL DEPTH EJ WITH PREMOLDED JOINT FILLER (3/8X6") AND SEALANT AS SPECIFIED.
2. EJ AT MID–WIDTH OVER 24'–0"
3. CONCRETE SURFACE.
4. CEMENT CONCRETE TO BE A MINIMUM 6" IN THICKNESS AND PLACED ON 2" COMPACTED CRUSHED SURFACING TOP COURSE OVER COMPACTED SUBGRADE.

LOWERED CURB

3

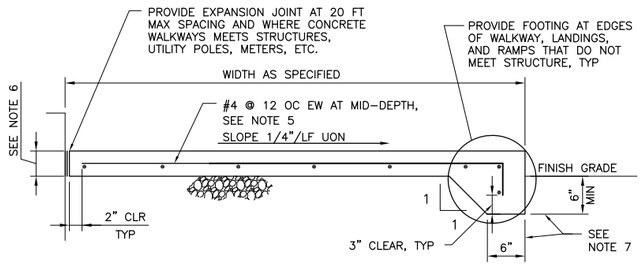

NOTES:

1. PROVIDE TROWELED FINISH UNO PER THE REQUIREMENTS OF SPEC SECTION 03002.
2. PROVIDE TOOLED JOINTS AT 5 FOOT CENTERS IN PERPENDICULAR DIRECTIONS.
3. PROVIDE 6" AGGREGATE BASE UNDER CONCRETE WALKWAYS, UNLESS OTHERWISE NOTED.
4. PROVIDE 12" AGGREGATE BASE UNDER CONCRETE RAMPS.
5. #5 AT 8" ON CENTER EACH WAY AT MID–DEPTH AT CONCRETE RAMPS.
6. 4" AT CONCRETE WALKWAYS, 6" AT CONCRETE LANDINGS, AND 8" AT CONCRETE RAMPS.
7. 12" AT CONCRETE RAMPS.

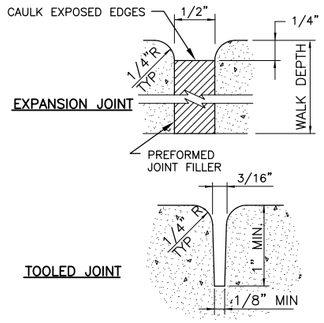

CONCRETE WALKWAY, LANDING, AND RAMP DETAILS

4

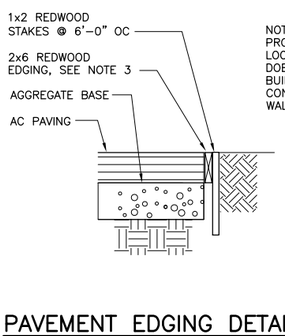

NOTE:
PROVIDE AT ALL EDGE LOCATIONS WHERE PAVING DOES NOT ABUT WALLS, BUILDINGS, STRUCTURES, CONCRETE PADS AND WALKWAYS.

PAVEMENT EDGING DETAIL

5

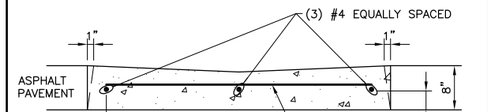

VALLEY GUTTER DETAIL

6

GENERAL NOTES:

1. THE TYPES, LOCATIONS, SIZES, AND DEPTHS OF EXISTING UNDERGROUND FACILITIES AS SHOWN ON THESE IMPROVEMENT PLANS WERE OBTAINED FROM SOURCES OF VARYING RELIABILITY. A REASONABLE EFFORT HAS BEEN MADE TO LOCATE AND DELINEATE ALL KNOWN UNDERGROUND FACILITIES. HOWEVER, THE OWNER AND ENGINEER CAN ASSUME NO RESPONSIBILITY FOR THE COMPLETENESS OR ACCURACY OF THE DELINEATION OF SUCH UNDERGROUND FACILITIES, NOR FOR THE EXISTENCE OF OTHER BURIED OBJECTS OR FACILITIES WHICH MAY BE ENCOUNTERED BUT WHICH ARE NOT SHOWN ON THESE PLANS. THE CONTRACTOR SHALL BE RESPONSIBLE FOR DETERMINING THE EXACT LOCATION OF THOSE FACILITIES SHOWN AND ANY WHICH MAY EXIST AND ARE NOT SHOWN PRIOR TO COMMENCEMENT OF ANY WORK. THE CONTRACTOR SHALL EXPOSE ALL UNDERGROUND FACILITIES THAT ARE TO BE CONNECTED TO OR THAT ARE IN THE PATH OF THE PROPOSED IMPROVEMENTS FOR VERIFICATION OF LOCATION AND ELEVATION. THE CONTRACTOR SHALL DETERMINE LOCATION OF CONFLICTS, IF ANY, PRIOR TO COMMENCING CONSTRUCTION OF THAT PORTION OF THE WORK THAT WOULD BE AFFECTED BY A CONFLICT WITH THE EXISTING FACILITIES. MINOR CHANGES, (< 5 FEET HORIZONTAL < 1 FEET VERTICAL), IN THE ACTUAL LOCATION, DEPTH AND CONFIGURATION OF EXISTING PIPING SYSTEMS DO NOT CONSTITUTE A CHANGED SITE CONDITION, AND THEREFORE NO EXTRA PAYMENT WILL BE ALLOWED.
2. LOCATIONS SHOWN FOR ALL NEW YARD PIPING ARE APPROXIMATE AND DEPEND ON LOCATION AND DEPTH OF EXISTING PIPING AND OTHER IMPROVEMENTS. THE CONTRACTOR IS REQUIRED TO FOLLOW THE ALIGNMENT SHOWN AS CLOSELY AS POSSIBLE AFTER DETERMINING EXACT LOCATION OF EXISTING FACILITIES.
3. COORDINATE ALL YARD PIPING WITH SITE ELECTRICAL WORK, (SEE SHEETS 00E103 AND 00E104). DO NOT START YARD PIPING UNTIL YARD ELECTRICAL CONDUITS ARE LOCATED.
4. SMALL DIAMETER (<4") WATER, IRRIGATION AND OTHER MISCELLANEOUS PIPING EXIST THROUGHOUT THE WPCP SITE AREA. THE CONTRACTOR IS REQUIRED TO REPAIR PIPING DAMAGED BY CONSTRUCTION AND/OR REALIGN PIPING AS REQUIRED TO CONSTRUCT THE IMPROVEMENTS UNDER THIS CONTRACT. NO ADDITIONAL COMPENSATION WILL BE GRANTED TO THE CONTRACTOR FOR THE REPAIR OF THIS SMALL DIAMETER PIPING.
5. ALL PAVING, LANDSCAPING, PIPING, AND OTHER EXISTING FACILITIES NOT DESIGNATED FOR REMOVAL/DEMOLITION DURING CONSTRUCTION OF NEW FACILITIES TO BE PROTECTED IN PLACE OR REPLACED IN KIND AT COMPLETION OF CONSTRUCTION.
6. ALL PAVING TO BE REMOVED SHALL BE SAWCUT PRIOR TO REMOVAL. MATCH EXISTING PAVEMENT ELEVATIONS AT SAWCUT LINES. SLOPE PAVEMENT TO DRAIN IN DIRECTION SHOWN (|). MINIMUM SLOPE = 0.5%.
7. MAINTAIN 3'–6" MINIMUM COVER ON ALL PIPING UNLESS SPECIFICALLY SHOWN OTHERWISE.

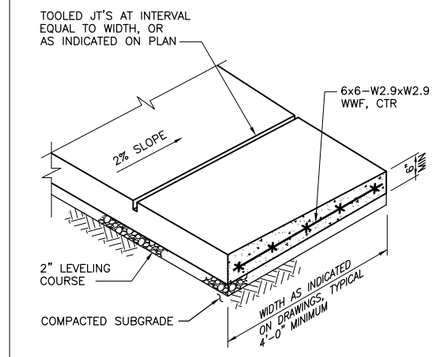

NOTES:

1. PROVIDE FULL DEPTH 3/8" PREMOLDED EXPANSION JOINT FILLER ALL AROUND AT ALL UTILITY POLES, METER BOXES, ETC.
2. PLACE FULL DEPTH THRU JOINTS W/1/2"x6" PREMOLDED EJ FILLER AT POINT OF TANGENCY AND AT MIN 25' INTERVALS.

CONCRETE WALKWAY

NTS

7

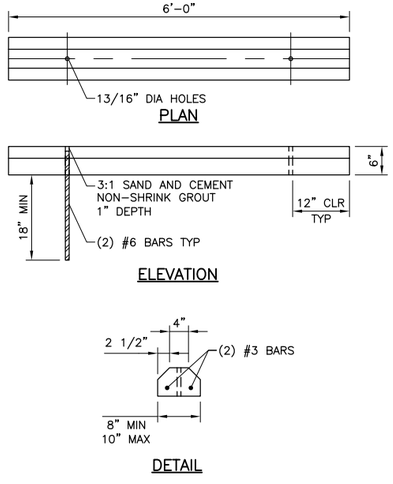

PRECAST CONCRETE WHEELSTOP

NTS

8

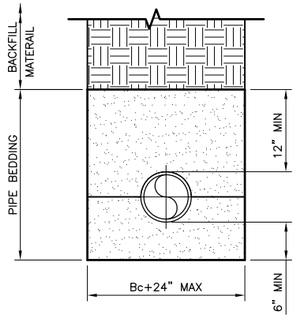

NOTE:

1. Bc=OUTSIDE DIAMETER OF PIPE.
2. SEE SECTION 02221.

EMBEDMENT FOR STEEL/DI PIPE

NTS

9

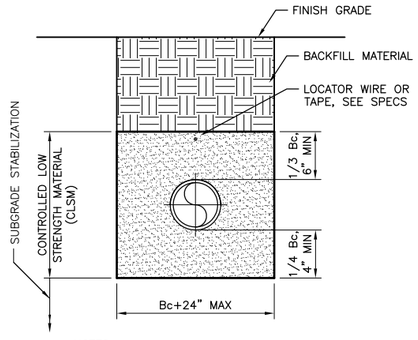

NOTES:

1. Bc=OUTSIDE DIAMETER OF PIPE.
2. ALL CLSM BACKFILL OMITTED FOR UG PIPING UNLESS SHOWN ON PLANS.

EMBEDMENT FOR FRP/PVC PIPE

NTS

10

FILE: 215786–00C001.dwg
DATE: Oct 06, 2015–3:16:11pm, rsnider

HDR Engineering, Inc.

ISSUE	DATE	DESCRIPTION
A	JUNE 2015	ISSUED FOR BID

PROJECT MANAGER	C. OLSON
DESIGNED	M. PERINPANAYAGAM
DESIGNED	
CHECKED	C. OLSON
DRAWN	P. VAN MEURS
DATE	JUNE 30, 2015
PROJECT NUMBER	215786

REGISTERED PROFESSIONAL ENGINEER
CRAIG A. OLSON
NO. 39819
EXP. 12/31/15
CIVIL
STATE OF CALIFORNIA
06-30-15

CITY OF PINOLE CALIFORNIA 1903

PINOLE/HERCULES
WATER POLLUTION
CONTROL PLANT UPGRADE
CLIENT PN

CIVIL

CIVIL DETAILS 1

0 1" 2"

FILENAME	215786–00C001
SCALE	NTS

SHEET
00C001

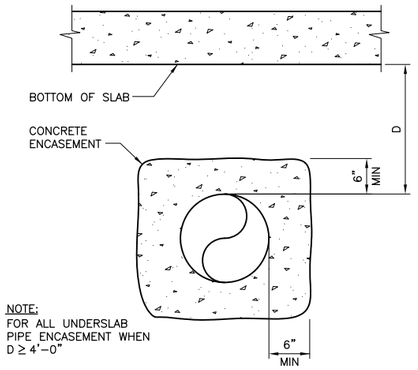

NOTE:
FOR ALL UNDERSLAB PIPE ENCASEMENT WHEN D ≥ 4'–0"

UNDERSLAB PIPE ENCASEMENT (1)

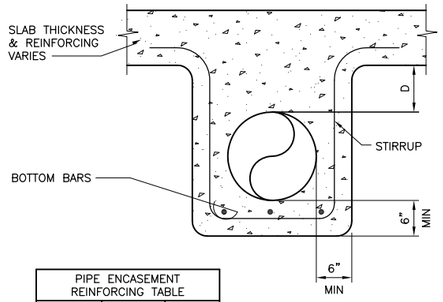

PIPE ENCASEMENT REINFORCING TABLE		
PIPE SIZE	STIRRUPS	BOTTOM BARS
4"–14"	#3@12	3#4
16"–20"	#3@12	4#4
24"–30"	#4@12	4#4
36"–48"	#4@8	5#4

NOTE:
FOR ALL UNDERSLAB PIPE ENCASEMENT WHEN D < 4'–0"

UNDERSLAB PIPE ENCASEMENT (2)

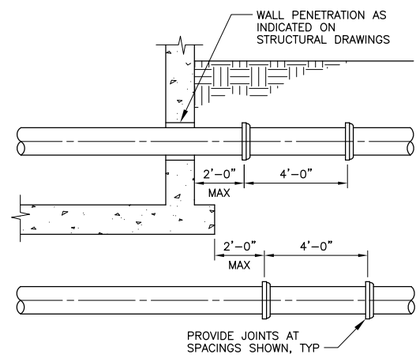

LOCATION OF FLEXIBLE CONNECTIONS DETAIL (3)

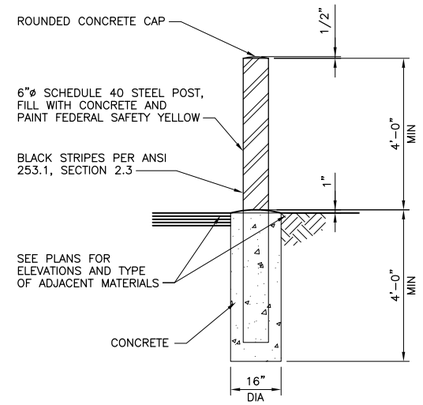

BOLLARD DETAIL (4)

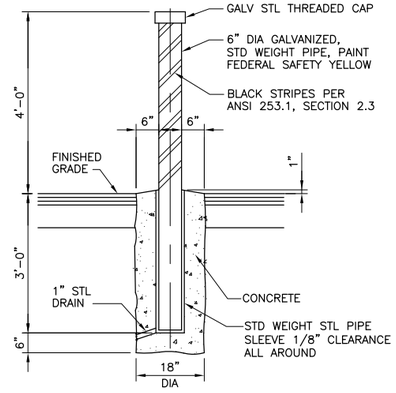

REMOVABLE BOLLARD DETAIL (5)

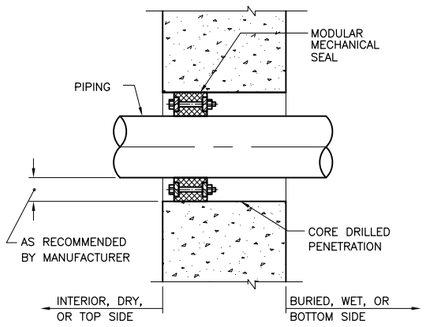

NOTES:
1. BOLT HEADS ON ACCESSIBLE SIDE OF PENETRATION
2. ONE SEAL FOR WALLS LESS THAN 8" THICK, TWO FOR WALLS 8" THICK AND LARGER
3. PROVIDE DOUBLE ROW OF SEALS FOR PIPES 16" DIAMETER AND LARGER IF CONCRETE THICKNESS PERMITS

PENETRATION (6)

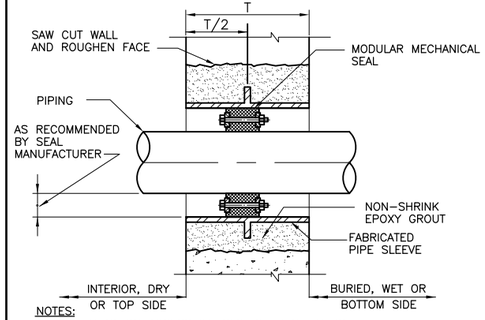

NOTES:
1. BOLT HEAD ON ACCESSIBLE SIDE OF PENETRATION
2. WHEN USED AS FLOOR PENETRATION IN WET AREA, PROVIDE SLEEVE WITH TOP 3" ABOVE FINISHED FLOOR
3. PROVIDE DOUBLE ROW OF SEALS FOR PIPES 16" DIAMETER AND LARGER IF CONCRETE THICKNESS PERMITS
3. PROVIDE ONE SEAL FOR WALLS LESS THAN 8" THICK, TWO FOR WALLS 8" THICK AND LARGER

PENETRATION (7)

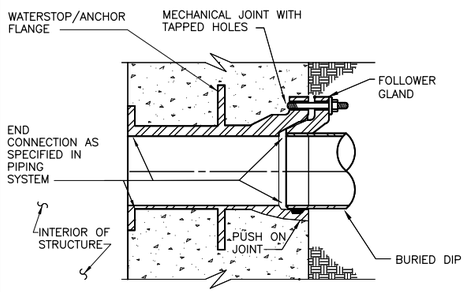

NOTE:
TYPICAL CONNECTION OF BURIED DIP TO CONCRETE STRUCTURE UNLESS OTHERWISE INDICATED

WALL PENETRATION FOR DUCTILE IRON PIPING SYSTEMS (8)

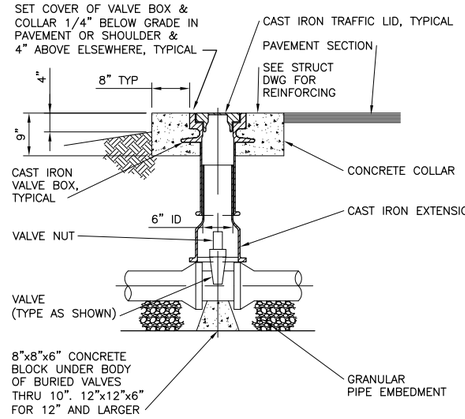

BURIED VALVE BOX (9)

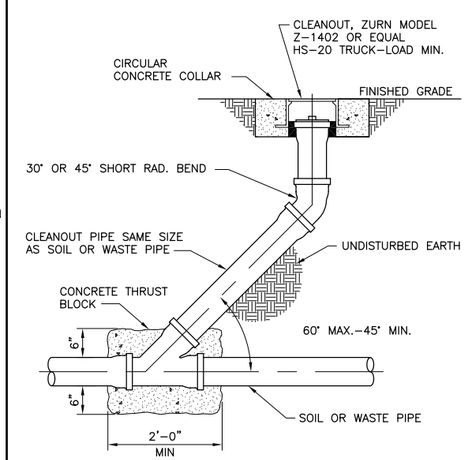

CLEAN OUT AT GRADE DETAIL (10)

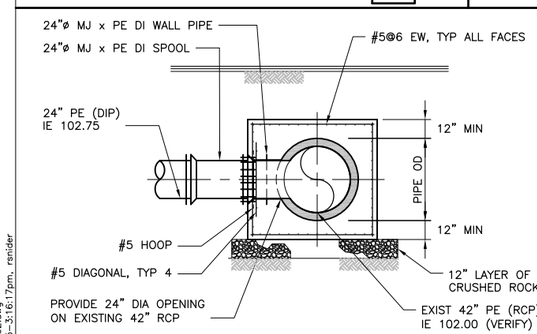

SECTION "A–A"

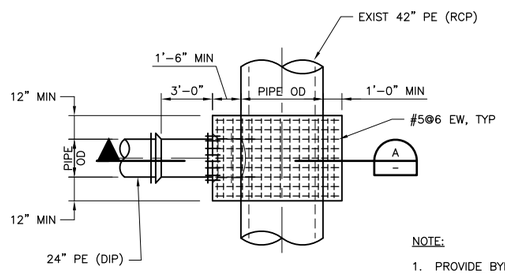

PARTIAL PLAN

NOTE:
1. PROVIDE BYPASS PUMPING TO MAKE CONNECTION.
2. CONTRACTOR MAY PROPOSE ALTERNATE CONNECTION DETAIL BASED ON CONSTRUCTION SEQUENCING.

CAST–IN–PLACE RCP CONNECTION DETAIL (11)

FILE: 215786–00C002.dwg
DATE: Oct 06, 2015–3:16:17pm, rsnider

HDR Engineering, Inc.

ISSUE	DATE	DESCRIPTION
A	JUNE 2015	ISSUED FOR BID

PROJECT MANAGER	C. OLSON
DESIGNED	M. PERINPANAYAGAM
DESIGNED	
CHECKED	C. OLSON
DRAWN	P. VAN MEURS
DATE	JUNE 30, 2015
PROJECT NUMBER	215786

REGISTERED PROFESSIONAL ENGINEER — CRAIG A. OLSON — NO. 39819 EXP. 12/31/15 — CIVIL — STATE OF CALIFORNIA — 06-30-15

CITY OF PINOLE CALIFORNIA 1903

PINOLE/HERCULES WATER POLLUTION CONTROL PLANT UPGRADE
CLIENT PN

CIVIL

CIVIL DETAILS 2

0 1" 2"

FILENAME	215786–00C002
SCALE	NTS

SHEET **00C002**

STORM DRAIN STRUCTURE TABLE

NAME	RIM ELEV	SUMP ELEV	COORDS	DIAMETER	PIPES
STD DI1	107.67	103.06	N 2196108.20 E 6044316.91	2.00'ø	12" OUT TO STD MH2, IE 103.23, S=0.50%
STD DI2	107.59	102.80	N 2196414.33 E 6044196.33	2.00'ø	12" OUT TO MH-PD11, IE 102.97, S=0.50%
STD DI3	108.50	103.08	N 2196372.59 E 6044083.83	2.00'ø	12" OUT TO MH-PD10, IE 103.25, S=0.50%
STD DI4	107.25	102.22	N 2196387.44 E 6043952.52	2.00'ø	12" OUT TO MH-PD12, IE 102.39, S=0.49%
STD DI5	108.01	102.42	N 2196221.86 E 6044008.90	2.00'ø	12" OUT TO MH-PD14, IE 102.59, S=0.50%
STD DI6	107.89	102.40	N 2196214.50 E 6044018.78	2.00'ø	12" OUT TO MH-PD14, IE 102.57, S=0.50%
STD DI7	109.17	104.75	N 2196146.78 E 6043942.56	2.00'ø	12" OUT TO MH-PD13, IE 104.92, S=0.50%
STD DI8	108.12	102.70	N 2196147.42 E 6044021.94	2.00'ø	12" OUT TO MH-PD3, IE 102.87, S=0.50%
STD DI9	107.88	102.46	N 2196128.45 E 6044004.81	2.00'ø	12" OUT TO MH-PD2, IE 102.63, S=0.50%
STD DI10	108.37	102.96	N 2196103.11 E 6044207.41	2.00'ø	12" OUT TO MH-PD6, IE 103.12, S=0.37%
STD DI11	108.19	102.77	N 2196193.75 E 6044106.47	2.00'ø	12" OUT TO MH-PD4, IE 102.94, S=0.50%
STD DI12	108.12	102.72	N 2196138.86 E 6044056.98	2.00'ø	12" OUT TO MH-PD3, IE 102.89, S=0.50%
STD DI13	109.15	103.57	N 2196084.49 E 6043988.48	2.00'ø	12" OUT TO MH-PD2, IE 103.74, S=0.50%
STD DI14	108.90	100.60	N 2196027.91 E 6043967.43	2.00'ø	12" OUT TO HEADWORKS, IE 102.60, S=1.60%

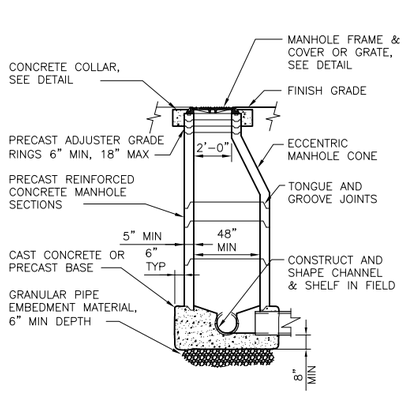

SECTION A
NTS

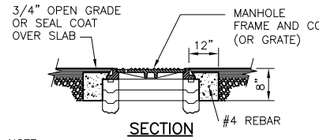

SECTION

NOTE:

1. COLLAR NOT REQUIRED IN LANDSCAPED OR UNPAVED AREAS

CONCRETE COLLAR DETAIL
NTS

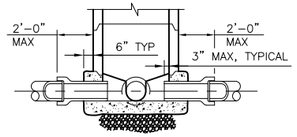

SECTION B
NTS

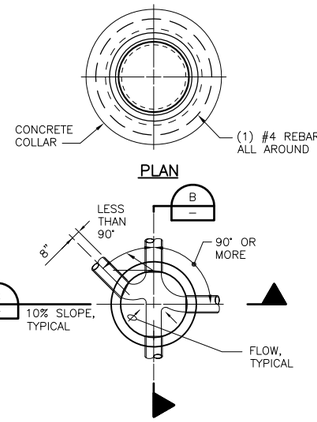

PLAN VIEW OF MANHOLE SHOWING INTERSECTING DRAINS
NTS

PRECAST ECCENTRIC MANHOLE
NTS

NOTES:

1. IN UNIMPROVED NON-TRAFFIC AREAS, TOP OF MANHOLE SHALL BE 6" TO 9" ABOVE GRADE UNO.
2. PIPES SHALL NOT PROTRUDE MORE THAN 3" INSIDE OF MANHOLE SECTION. CONSTRUCT WATER TIGHT CONNECTION TO MANHOLE.
3. MANHOLE SECTION LENGTHS ARRANGED TO FIT DEPTH.
4. SET AND SEAL MANHOLE SECTION JOINTS AS FOLLOWS:
   A. ABOVE HIGH GROUNDWATER ELEVATION: MASTIC JOINT COMPOUND
   B. BELOW HIGH GROUNDWATER ELEVATION: PREMOLDED JOINT COMPOUND OR O-RING

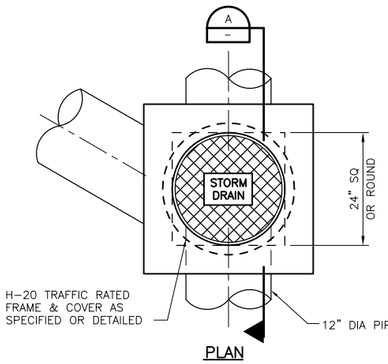

PLAN

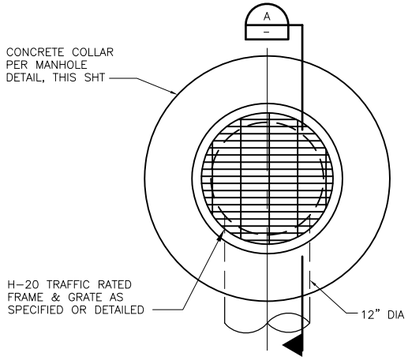

PLAN

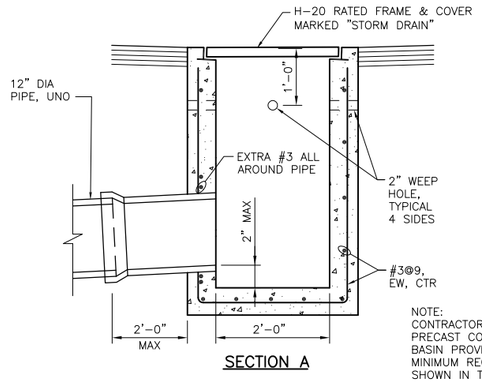

SECTION A

NOTE:
CONTRACTOR MAY SUBMIT PRECAST CONCRETE CATCH BASIN PROVIDING IT MEETS MINIMUM REQUIREMENTS SHOWN IN THIS DETAIL.

STD MANHOLE DETAIL

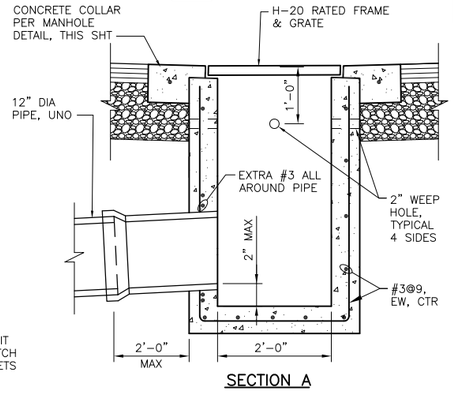

SECTION A

DROP INLET

PLANT INFLUENT STRUCTURE TABLE

NAME	SUMP ELEV	COORDS	DIAMETER	PIPES
MH 1	97.05	N 2196015.72 E 6043990.84	5.00'ø	36" IN FROM MH 2, IE 97.10, S=0.20% 36" OUT TO Headworks, IE 97.05, S=0.20%
MH 2	97.29	N 2196020.73 E 6044086.46	5.00'ø	36" IN FROM MH 3, IE 97.34, S=0.20% 36" OUT TO MH 1, IE 97.29, S=0.20%
MH 3	97.45	N 2196061.85 E 6044123.48	5.00'ø	30" IN FROM Structure - (111), IE 99.47, S=0.20% 30" IN FROM Structure - (116), IE 97.50, S=0.20% 36" OUT TO MH 2, IE 97.45, S=0.20%
MH H1	100.06	N 2196104.04 E 6044161.45	5.00'ø	30" IN FROM MH H2, IE 100.06, S=0.20% 30" OUT TO Structure - (111), IE 100.06, S=4.58%
MH H2	100.12	N 2196127.31 E 6044182.39	5.00'ø	24" IN FROM Structure - (30), IE 100.17, S=0.20% 30" OUT TO MH H1, IE 100.12, S=0.20%
MH P1	97.54	N 2196041.93 E 6044145.28	5.00'ø	30" IN FROM Structure - (113), IE 98.04, S=0.20% 30" OUT TO Structure - (116), IE 98.04, S=4.58%

PLANT DRAIN STRUCTURE TABLE

NAME	SUMP ELEV	COORDS	DIAMETER	PIPES
MH PD1	98.28	N 2196057.06 E 6044023.69	5.00'ø	24" IN FROM Structure - (202), IE 98.28, S=0.37% 24" OUT TO , IE 98.28, S=0.37%
MH PD2	98.51	N 2196100.72 E 6044002.74	5.00'ø	24" IN FROM MH PD3, IE 98.51, S=0.45% 12" IN FROM MH PD13, IE 99.51, S=0.50% 24" OUT TO MH PDFM, IE 98.51, S=0.37%
MH PD3	98.73	N 2196136.22 E 6044034.47	4.00'ø	24" IN FROM MH PD4, IE 98.73, S=0.45% 24" OUT TO MH PD2, IE 98.73, S=0.45%
MH PD4	99.09	N 2196196.12 E 6044088.01	5.00'ø	18" IN FROM MH PD8, IE 99.09, S=0.36% 18" IN FROM MH PD5, IE 99.09, S=0.45% 24" OUT TO MH PD3, IE 99.09, S=0.45%
MH PD5	99.47	N 2196152.42 E 6044160.33	4.00'ø	18" IN FROM MH PD6, IE 99.47, S=0.45% 18" OUT TO MH PD4, IE 99.47, S=0.45%
MH PD6	99.80	N 2196112.74 E 6044226.00	4.00'ø	18" IN FROM MH PD7, IE 99.85, S=0.45% 18" OUT TO MH PD5, IE 99.82, S=0.45%
MH PD7	100.36	N 2196197.43 E 6044301.05	4.00'ø	18" OUT TO MH PD6, IE 100.36, S=0.45%
MH PD8	99.41	N 2196279.52 E 6044054.62	4.00'ø	12" IN FROM MH PD12, IE 99.41, S=0.50% 12" IN FROM MH PD9, IE 99.41, S=0.36% 18" OUT TO MH PD4, IE 99.41, S=0.36%
MH PD9	99.63	N 2196324.41 E 6044094.87	4.00'ø	12" IN FROM MH PD10, IE 99.63, S=0.64% 12" OUT TO MH PD8, IE 99.63, S=0.36%
MH PD10	100.00	N 2196367.50 E 6044133.52	4.00'ø	12" IN FROM MH PD11, IE 100.00, S=0.50% 12" OUT TO MH PD9, IE 100.00, S=0.64%
MH PD11	100.34	N 2196418.81 E 6044179.52	4.00'ø	12" OUT TO MH PD10, IE 100.34, S=0.50%
MH PD12	99.77	N 2196335.16 E 6044010.41	4.00'ø	12" OUT TO MH PD8, IE 99.77, S=0.50%
MH PD13	99.85	N 2196145.68 E 6043952.67	4.00'ø	12" IN FROM MH PD14, IE 101.35, S=0.57% 12" OUT TO MH PD2, IE 99.85, S=0.50%
MH PD14	101.86	N 2196212.54 E 6044012.45	4.00'ø	12" OUT TO MH PD13, IE 101.86, S=0.57%
MH PDFM	98.44	N 2196082.69 E 6044011.39	5.00'ø	24" IN FROM MH PD2, IE 98.44, S=0.37% 24" OUT TO Structure - (202), IE 98.44, S=0.87%
Structure - (202)	???	N 2196072.86 E 6044016.11	???'ø	24" IN FROM MH PDFM, IE 98.34, S=0.87% 24" OUT TO MH PD1, IE 98.34, S=0.37%

FILE: 215786-00C003.dwg
DATE: Oct 06, 2015 - 3:16:31pm, rsnider

HDR Engineering, Inc.

ISSUE	DATE	DESCRIPTION
A	JUNE 2015	ISSUED FOR BID

PROJECT MANAGER	C. OLSON
DESIGNED	M. PERINPANAYAGAM
DESIGNED	
CHECKED	C. OLSON
DRAWN	P. VAN MEURS
DATE	JUNE 30, 2015
PROJECT NUMBER	215786

REGISTERED PROFESSIONAL ENGINEER
CRAIG A. OLSON
NO. 39819
EXP. 12/31/15
CIVIL
STATE OF CALIFORNIA
06-30-15

CITY OF PINOLE CALIFORNIA 1903

PINOLE/HERCULES
WATER POLLUTION
CONTROL PLANT UPGRADE
CLIENT PN

CIVIL

CIVIL DETAILS 3

0 1" 2"

FILENAME	215786-00C003
SCALE	NTS

SHEET
00C003

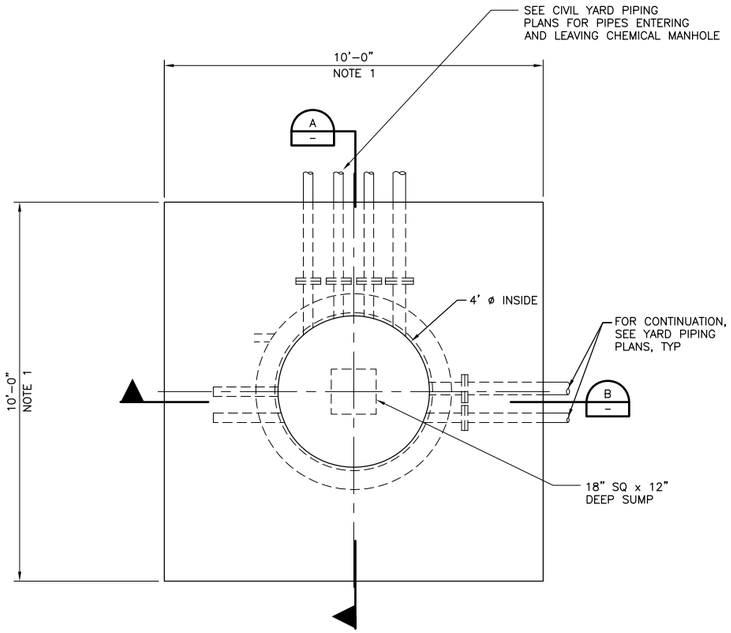

TOP PLAN
MAINTENANCE CHEMICAL MANHOLE 1
1/2" = 1'-0"

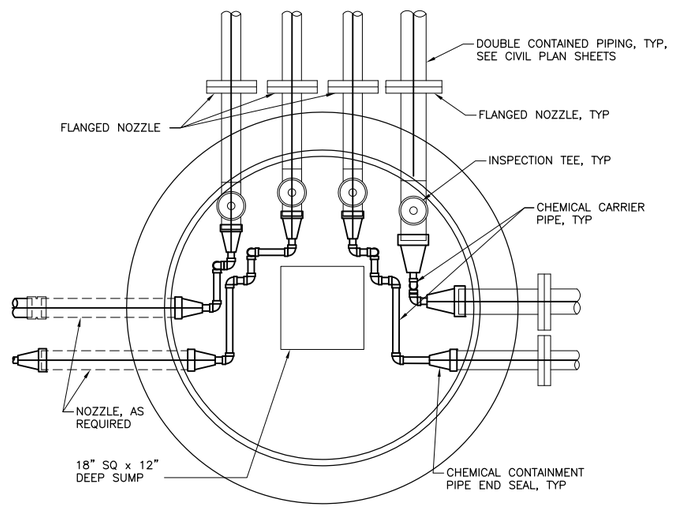

BOTTOM PLAN
CHEMICAL MAINTENANCE MANHOLE DETAIL 2
NTS

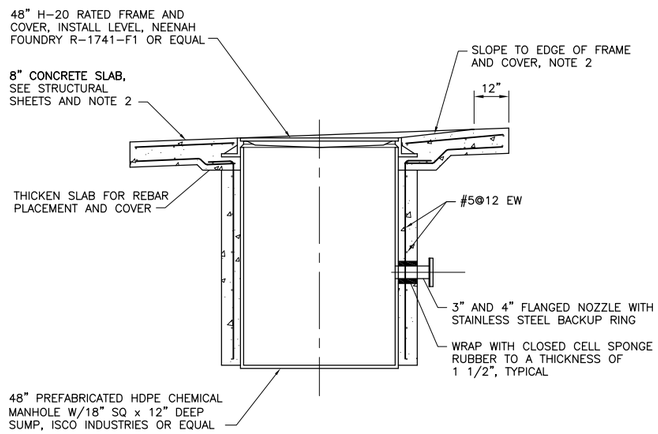

SECTION
1/2" = 1'-0" A

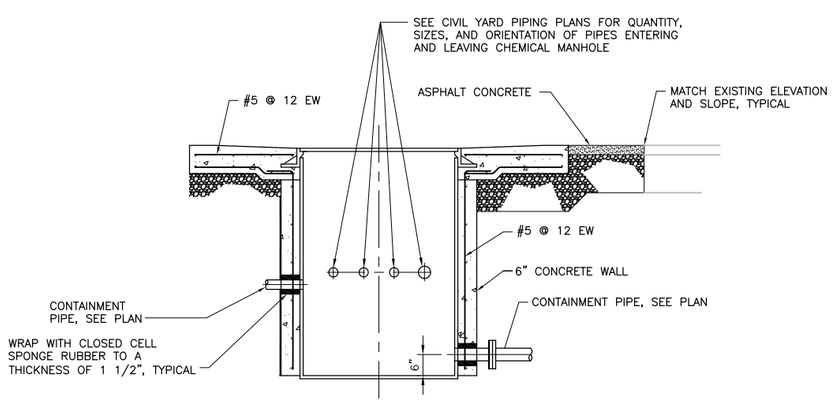

SECTION
1/2" = 1'-0" B

NOTES:

1. PROVIDE CONCRETE SLAB AS SHOWN IN PAVED AREAS. PROVIDE 1'-6" WIDE CONCRETE SLAB AROUND THE CHEMICAL MANHOLE IN DIRT AREAS.
2. SLOPE TO MATCH SURROUNDING GRADE IN PAVED AREAS. TOP OF CHEMICAL MANHOLE LID SHALL BE 2" ABOVE FINISH GRADE IN DIRT AREAS.

HDR
HDR Engineering, Inc.

ISSUE	DATE	DESCRIPTION
A	JUNE 2015	ISSUED FOR BID

PROJECT MANAGER	C. OLSON
DESIGNED	M. PERINPANAYAGAM
DESIGNED	
CHECKED	C. OLSON
DRAWN	P. VAN MEURS
DATE	JUNE 30, 2015
PROJECT NUMBER	215786

REGISTERED PROFESSIONAL ENGINEER
CRAIG A. OLSON
NO. 39819
EXP. 12/31/15
CIVIL
STATE OF CALIFORNIA
06-30-15

CITY OF PINOLE CALIFORNIA 1903

PINOLE/HERCULES
WATER POLLUTION
CONTROL PLANT UPGRADE
CLIENT PN

CIVIL

CIVIL DETAILS 4

0 1" 2"

FILENAME	215786-00C004
SCALE	NTS

SHEET
00C004

FILE: 215786-00C004.dwg
DATE: Oct 06, 2015-3:16:37pm, rsnider

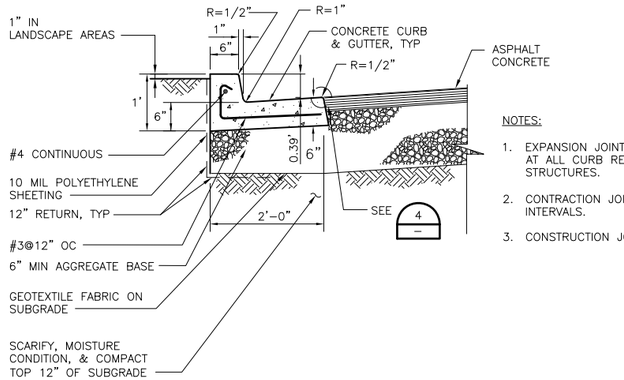

NOTES:

1. EXPANSION JOINTS AT 48' INTERVALS, AT ALL CURB RETURNS AND ALL STRUCTURES.
2. CONTRACTION JOINTS AT 10' INTERVALS.
3. CONSTRUCTION JOINTS.

CURB AND GUTTER DETAIL 1
NTS

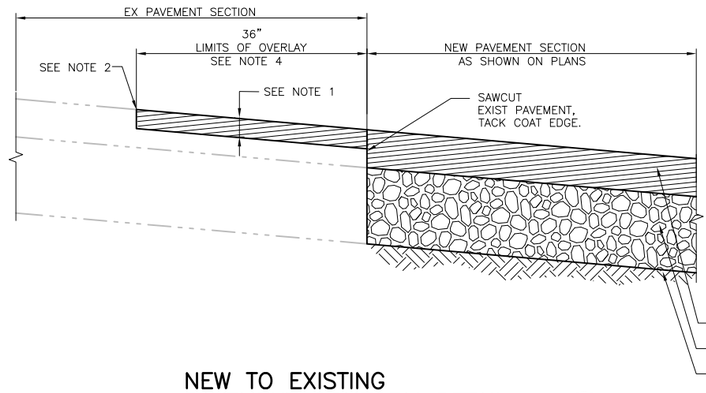

NOTE:

1. GRIND PAVEMENT TO 1.5" MIN DEPTH FOR CONFORMITY. NO FEATHERING WILL BE ALLOWED. TACK COAT EDGE.
2. EXISTING ASPHALT SHALL BE SAW CUT AT THE CONFORM TO THE FULL DEPTH OF THE GRIND TO A NEAT STRAIGHT VERTICAL EDGE.
3. GRIND PAVEMENT PER THE REQUIREMENTS OF CALTRANS SPECIFICATIONS 42-2.
4. OVERLAY AREA IS NOT SHADED AS PAVEMENT ON DRAWINGS.

NEW TO EXISTING PAVEMENT CONFORM DETAIL 2
NTS

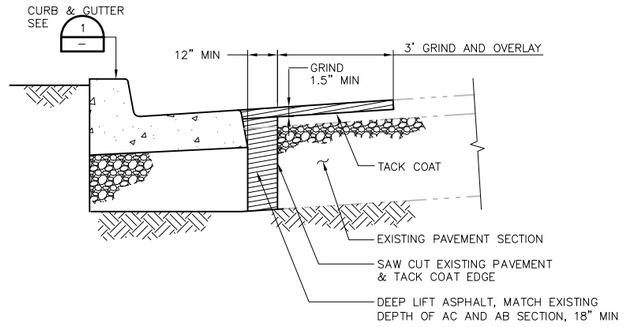

NEW CURB AND GUTTER PAVEMENT CONFORM DETAIL 3
NTS

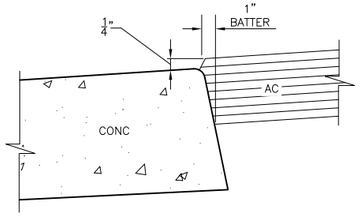

GUTTER LIP DETAIL 4
NTS

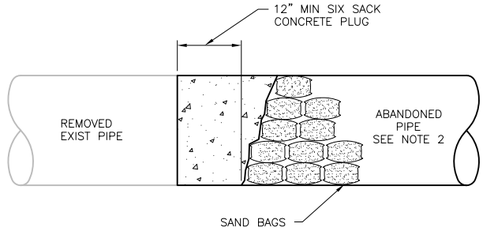

NOTES:

1. IN LIEU OF CONCRETE PLUG, CONTRACTOR MAY INSTALL APPROVED CAPS OR PLUGS THAT ARE THE SAME MATERIAL AS THE PIPE AS APPROVED BY THE ENGINEER.
2. ABANDON PIPES 15" AND LARGER SHALL BE FILLED WITH SAND OR CLSM UNLESS OTHERWISE NOTED ON THE DRAWINGS.

PIPE ABANDONMENT DETAIL 5
NTS

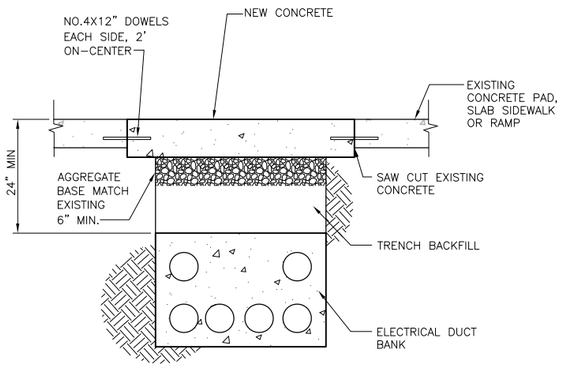

CONCRETE RESURFACING

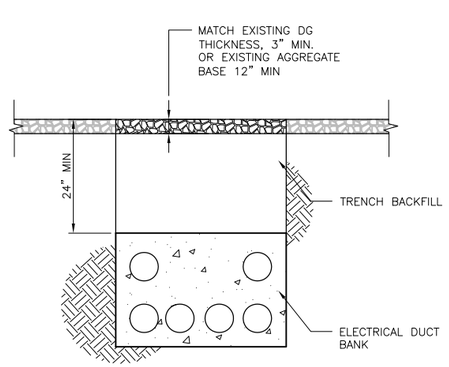

DECOMPOSED GRANITE OR AGGREGATE BASE RESURFACING

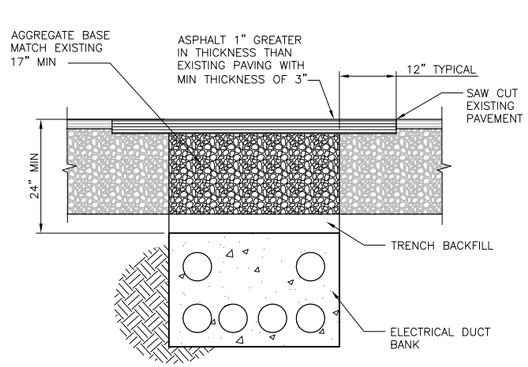

ASPHALT CONCRETE PAVEMENT RESURFACING

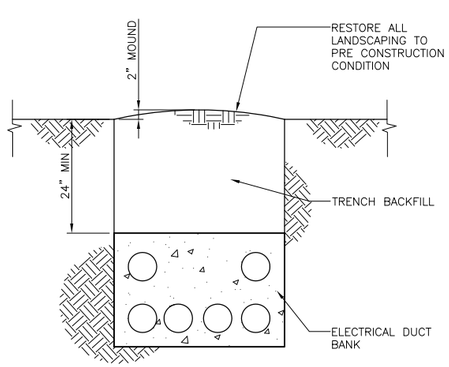

OUTSIDE OF ROADWAY RESURFACING

TYPICAL ELECTRICAL DUCT BANK TRENCH RESURFACING DETAIL 6
NTS

FILE: 215786-00C005.dwg
DATE: Oct 06, 2015-3:16:43pm, ranider

HDR Engineering, Inc.

ISSUE	DATE	DESCRIPTION
A	JUNE 2015	ISSUED FOR BID

PROJECT MANAGER	C. OLSON
DESIGNED	M. PERINPANAYAGAM
DESIGNED	
CHECKED	C. OLSON
DRAWN	P. VAN MEURS
DATE	JUNE 30, 2015
PROJECT NUMBER	215786

REGISTERED PROFESSIONAL ENGINEER
CRAIG A. OLSON
NO. 39819
EXP. 12/31/15
CIVIL
STATE OF CALIFORNIA
06-30-15

CITY OF PINOLE CALIFORNIA 1903

PINOLE/HERCULES
WATER POLLUTION
CONTROL PLANT UPGRADE
CLIENT PN

CIVIL

CIVIL DETAILS 5

0 1" 2"

FILENAME	215786-00C005
SCALE	NTS

SHEET
00C005

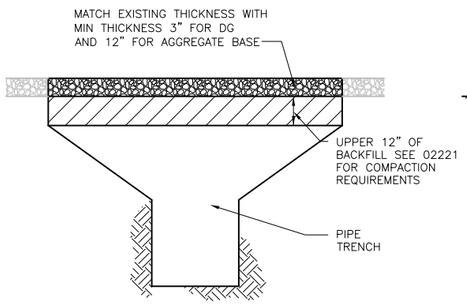

AGGREGATE BASE OR DECOMPOSED GRANITE RESURFACING

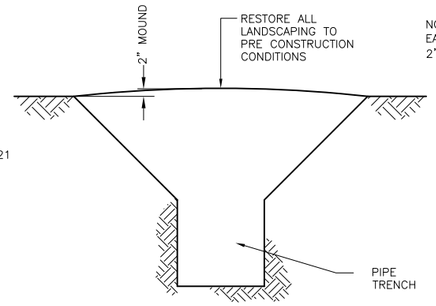

OTHER
(OUTSIDE OF SURFACED ROADWAY)

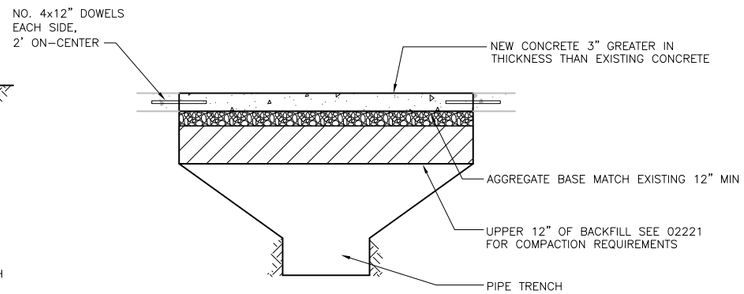

CONCRETE RESURFACING

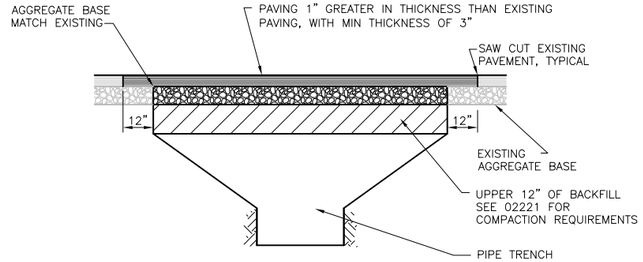

ASPHALT CONCRETE
PAVEMENT RESURFACING

TYPICAL PIPE TRENCH RESURFACING DETAIL

1

NTS

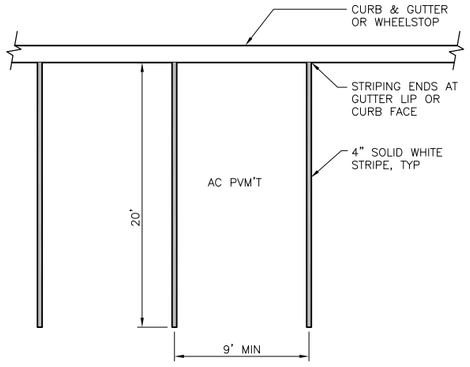

TYPICAL PARKING STALL DETAIL

2

NTS

FILE: 215786-00C006.dwg
DATE: Oct 06, 2015-3:16:48pm, rsnider

HDR Engineering, Inc.

ISSUE	DATE	DESCRIPTION
A	JUNE 2015	ISSUED FOR BID

PROJECT MANAGER	C. OLSON
DESIGNED	M. PERINPANAYAGAM
DESIGNED	
CHECKED	C. OLSON
DRAWN	P. VAN MEURS
DATE	JUNE 30, 2015
PROJECT NUMBER	215786

REGISTERED PROFESSIONAL ENGINEER
CRAIG A. OLSON
NO. 39819
EXP. 12/31/15
CIVIL
STATE OF CALIFORNIA
06-30-15

CITY OF PINOLE CALIFORNIA 1903

PINOLE/HERCULES
WATER POLLUTION
CONTROL PLANT UPGRADE
CLIENT PN

CIVIL

CIVIL DETAILS 6

0 1" 2"

FILENAME	215786-00C006
SCALE	NTS

SHEET
00C006

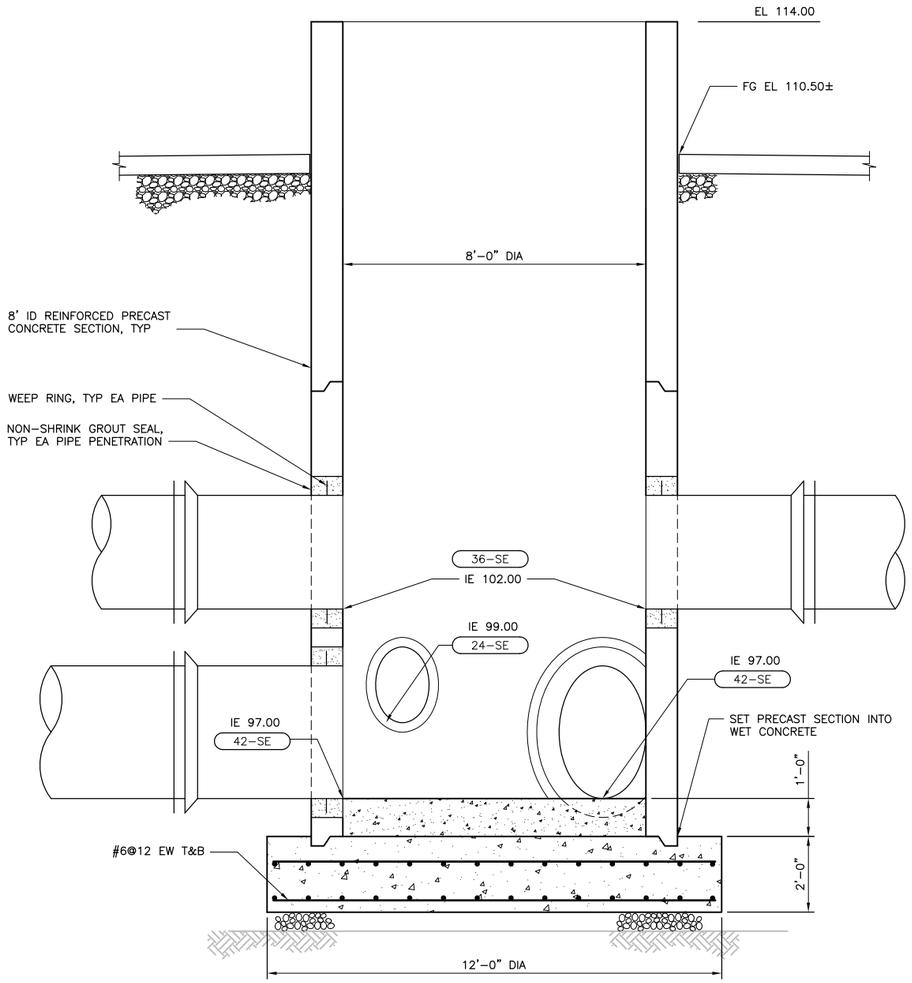

NOTE: SEE PLAN VIEW FOR TRUE ORIENTATION OF PIPING AND APPURTENANCES.

SECTION
1/2" = 1'–0"

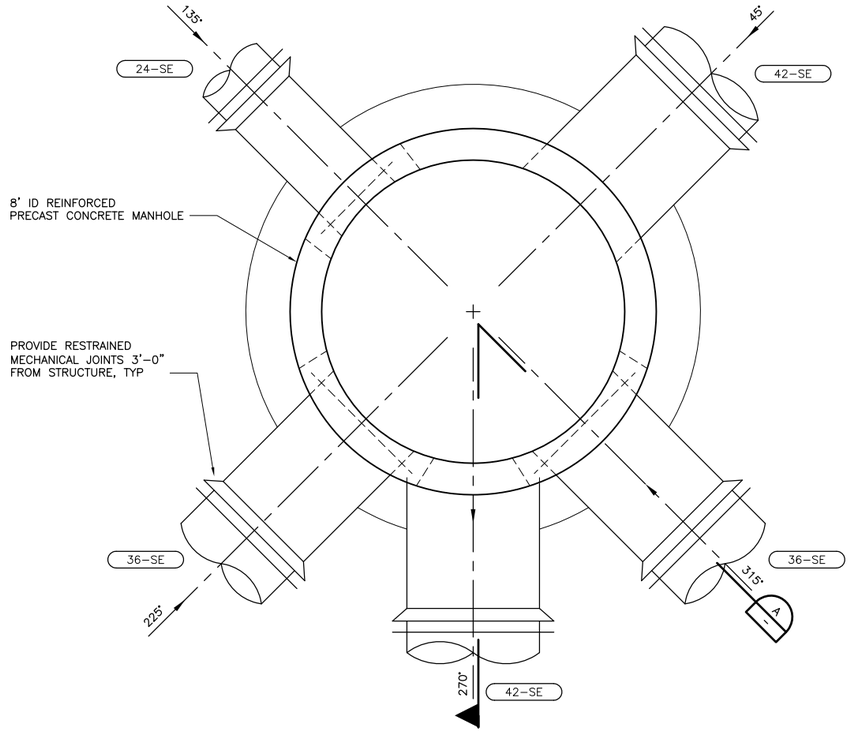

SECTIONAL PLAN VIEW SECONDARY EFFLUENT JUNCTION BOX
1/2" = 1'–0"

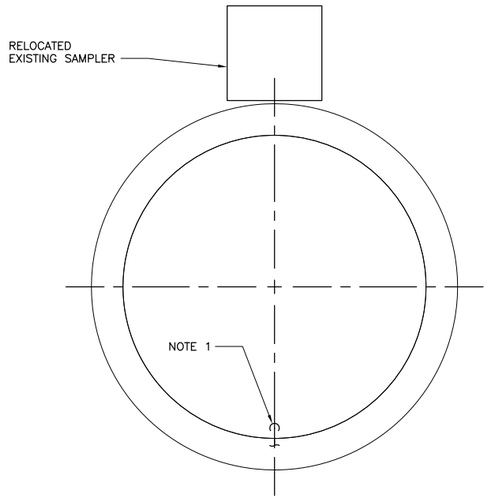

TOP PLAN VIEW SECONDARY EFFLUENT JUNCTION BOX
1/2" = 1'–0"

NOTES:

1. SEE DETAIL 1 ON SHEET 00P006 FOR SAMPLE INTAKE INSTALLATION.

FILE: 00C007.dwg
DATE: Oct 06, 2015 - 3:16:53pm, rsnider

HDR Engineering, Inc.

ISSUE	DATE	DESCRIPTION
A	JUNE 2015	ISSUED FOR BID

PROJECT MANAGER	C. OLSON
DESIGNED	R. NATOLI
DESIGNED	
CHECKED	C. OLSON
DRAWN	P. VAN MEURS
DATE	JUNE 30, 2015
PROJECT NUMBER	215786

REGISTERED PROFESSIONAL ENGINEER
CRAIG A. OLSON
NO. 39819
EXP. 12/31/15
CIVIL
STATE OF CALIFORNIA
06-30-15

CITY OF PINOLE CALIFORNIA 1903

PINOLE/HERCULES WATER POLLUTION CONTROL PLANT UPGRADE
CLIENT PN

CIVIL

CIVIL DETAILS 7

0 1" 2"

FILENAME	00C007
SCALE	AS NOTED

SHEET **00C007**

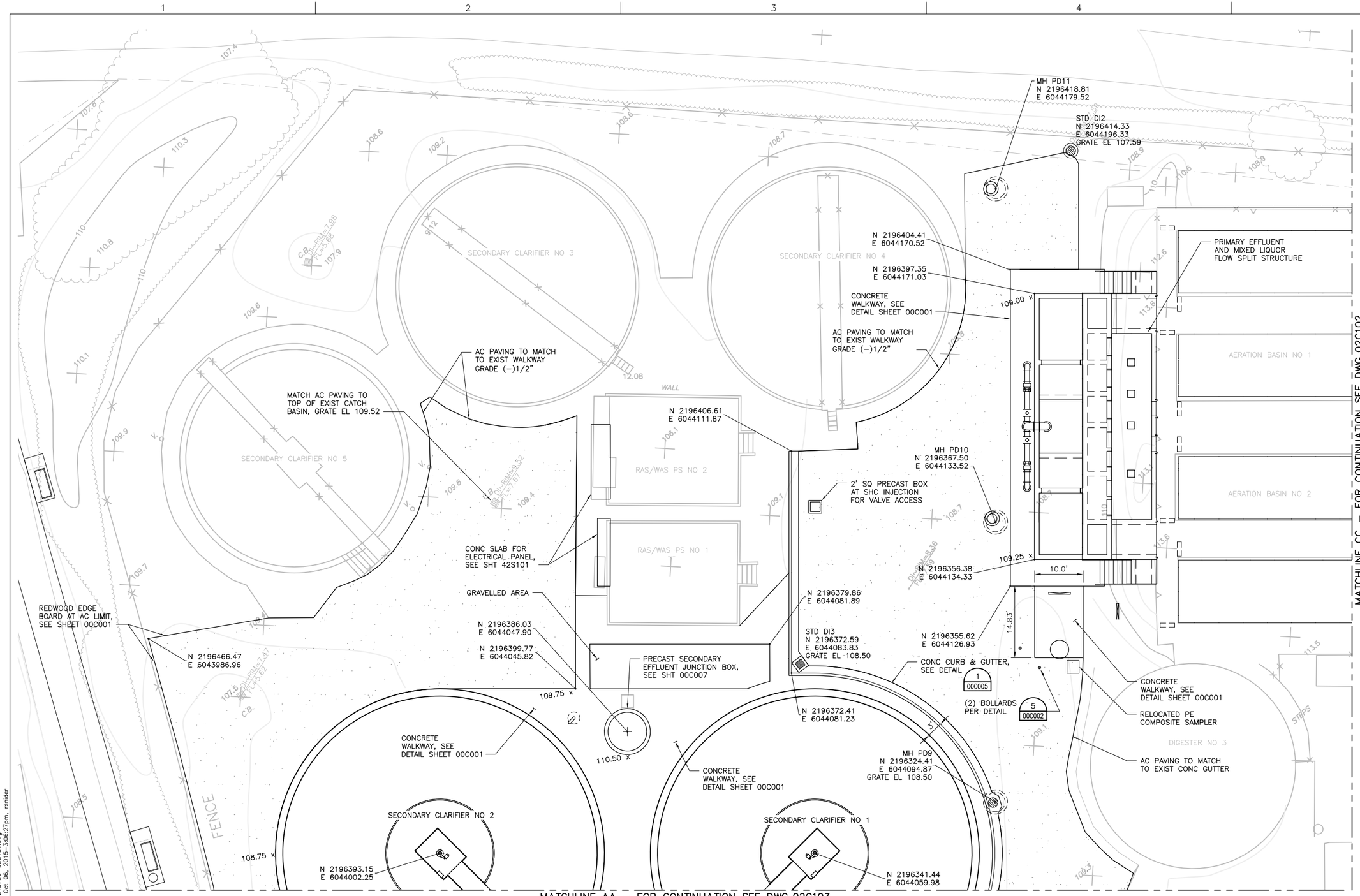

NOTES:

1. SPOT ELEVATIONS OF EXISTING GRADING AND PAVING ARE PROVIDED FOR REFERENCE AND ARE TO BE FOLLOWED FOR NEW GRADING AND PAVING WHERE NO OTHER DESIGN INPUT IS GIVEN.
2. SLOPE GRADE UNIFORMLY TO STORM DRAIN DROP INLETS WHEREVER SHOWN.

AREA 1	AREA 2
AREA 3	AREA 4
AREA 5	AREA 6

FILE: 215786-02C101.dwg
DATE: Oct 06, 2015-3:06:27pm, rsnider

HDR
HDR Engineering, Inc.

ISSUE	DATE	DESCRIPTION
A	JUNE 2015	ISSUED FOR BID

PROJECT MANAGER	C. OLSON
DESIGNED	M. PERINPANAYAGAM
DESIGNED	
CHECKED	C. OLSON
DRAWN	P. VAN MEURS
DATE	JUNE 30, 2015
PROJECT NUMBER	215786

REGISTERED PROFESSIONAL ENGINEER
CRAIG A. OLSON
NO. 39819
EXP. 12/31/15
CIVIL
STATE OF CALIFORNIA
06-30-15

CITY OF PINOLE CALIFORNIA 1903

PINOLE/HERCULES
WATER POLLUTION
CONTROL PLANT UPGRADE
CLIENT PN

CIVIL

GRADING AND PAVING PLAN
AREA 1

0 1" 2"

FILENAME	215786-02C101
SCALE	1" = 10'

SHEET
02C101

MATCHLINE CC – FOR CONTINUATION SEE DWG 02C101

AERATION BASIN NO 1

AERATION BASIN NO 2

AERATION BASIN NO 2

AERATION BASIN NO 1

DIGESTER NO 4

CO-GEN

FENCE

N 2196259.99
E 6044344.58

STD MH1
N 2196251.03
E 6044348.55
GRATE EL 107.50

107.80

N 2196201.38
E 6044400.13

109.10

RELOCATED PERIMETER CHAIN LINK FENCE, SEE DETAILS ON SHEET 00C001

6" AC CURB PER DETAIL 2 / 00C001

1.5' TYP

3' WIDE CONC VALLEY GUTTER PER DETAIL 6 / 00C001

STD MH2
N 2196184.16
E 6044381.95
GRATE EL 107.67

EL 108.05

N 2196157.60
E 6044397.10

PRECAST CONC WHEELSTOP, SEE DETAIL 8 ON SHEET 00C001, TYP

4" WHITE PARKING STALL STRIPE, SEE SPEC SECTION 02513, TYP

27.7' TYP

9.0' TYP

46°

N 2196219.90
E 6044322.52
FG EL 108.94

N 2196202.47
E 6044332.52
FG EL 109.14

109.04

CONC WALKWAY PER DETAIL, SHEET 00C001

109.10

GRAVITY SOLIDS THICKENER

N 2196179.28
E 6044329.95

108.76

MH-PD7
N 2196197.43
E 6044301.05

N 2196188.77
E 6044294.93

N 2196177.41
E 6044298.89

109.78

108.33

108.87

N 2196214.27
E 6044244.23
FG EL 109.75

RAMP

WALKWAY

110.00

STEP

109.50

PACKAGED SOLIDS HANDLING ODOR CONTROL

CONC APRON PER DETAIL, SHEET 00C001

N 2196234.86
E 6044221.00

EL 109.50

MATCH TO EXIST CONC APRON

SLOPE GUTTER TO DRAIN

110.00

SOLIDS HANDLING BUILDING
FF 110.00

SOLIDS TRUCK LOADING STATION
FF 109.50

N 2196157.13
E 6044306.85

RAISE MH FRAME & LID AS NEEDED TO SET FLUSH TO FINISH GRADE

MATCH TO EXIST GRADE

LOWERED CURB AT DOORWAY, TYP, SEE 3 / 00C002

EX MH

N 2196183.72
E 6044227.44

CONC CURB & GUTTER, SEE DETAIL 1 / 00C005

PUBLIC WORKS BUILDING

STD DI1
N 2196108.20
E 6044316.91
GRATE EL 107.67

108.21

MATCHLINE AA – FOR CONTINUATION SEE DWG 02C104

N

0 10' 20'

NOTES:

1. SPOT ELEVATIONS OF EXISTING GRADING AND PAVING ARE PROVIDED FOR REFERENCE AND ARE TO BE FOLLOWED FOR NEW GRADING AND PAVING WHERE NO OTHER DESIGN INPUT IS GIVEN.
2. SLOPE GRADE UNIFORMLY TO STORM DRAIN DROP INLETS WHEREVER SHOWN.

AREA 1	AREA 2
AREA 3	AREA 4
AREA 5	AREA 6

FILE: 215786-02C102.dwg
DATE: Oct 06, 2015 - 3:07:05pm, rsnider

HDR Engineering, Inc.

ISSUE	DATE	DESCRIPTION
A	JUNE 2015	ISSUED FOR BID

PROJECT MANAGER	C. OLSON
DESIGNED	M. PERINPANAYAGAM
DESIGNED	
CHECKED	C. OLSON
DRAWN	P. VAN MEURS
DATE	JUNE 30, 2015
PROJECT NUMBER	215786

REGISTERED PROFESSIONAL ENGINEER
CRAIG A. OLSON
NO. 39819
EXP. 12/31/15
CIVIL
STATE OF CALIFORNIA
06-30-15

CITY OF PINOLE CALIFORNIA 1903

PINOLE/HERCULES
WATER POLLUTION
CONTROL PLANT UPGRADE
CLIENT PN

CIVIL

GRADING AND PAVING PLAN AREA 2

0 1" 2"

FILENAME	215786-02C102
SCALE	1" = 10'

SHEET **02C102**

MATCHLINE AA – FOR CONTINUATION SEE DWG 02C101

SECONDARY CLARIFIER NO 2

SECONDARY CLARIFIER NO 1

R=37.25' FACE OF CURB

GRAVELLED AREA

27.48'

39.98' TYP

MH PD12
N 2196335.16
E 6044010.41
GRATE EL 108.61

STD DI4
N 2196387.44
E 6043952.52
GRATE EL 107.25

109.00

10.58' CLEAR

CONC WALKWAY PER DETAIL, SHEET 00C001

N 2196330.44
E 6044000.61

CONC CURB & GUTTER, SEE DETAIL 1 / 00C005

MH PD8
N 2196279.52
E 6044054.62

DIGESTER NO 1

AC PAVING TO MATCH TO EXIST CONC GUTTER

N 2196263.75
E 6044049.94

ADJUST EXIST MH LID AS REQD

CHLORINE CONTACT BASINS

SODIUM HYDROXIDE STORAGE/FEED

MAINTENANCE CHEMICAL MANHOLE, SEE 00C004

N 2196357.45
E 6043931.69

AC PAVING TO MATCH TO EXIST CONC GUTTER

(3) BOLLARDS AT 5' CENTERS PER 5 / 00C002

MATCH TO EXIST SAWCUT CONC PAVING

SECONDARY CLARIFIER NO 1

STD DI5
N 2196221.86
E 6044008.90
GRATE EL 108.01

CONC WALKWAY PER DETAIL, SHEET 00C001, MATCH TO EXIST SAWCUT EDGES

N 2196208.14
E 6044047.16

PRIMARY CLARIFIER NO 3

STD DI6
N 2196214.50
E 6044018.78
GRATE EL 107.89

CHLORINE CONTACT BASINS

WALL

EMERGENCY OUTFALL STRUCTURE

PE/SE JUNCTION BOX

PE/SE JUNCTION BOX

PRIMARY CLARIFIER INFLUENT DISTRIBUTION BOX

MH PD14
N 2196212.54
E 6044012.45

SCUM BOX

CONC WALKWAY PER DETAIL, SHEET 00C001

CONC CURB & GUTTER, SEE DETAIL 1 / 00C005

HYPOCHLORITE & BISULFITE STORAGE TANKS/ CONTAINMENT AREA, SEE SHT 75P101

EFFLUENT PUMPING STATION AND SURGE TANK, SEE SHT 91P101

N 2196317.16
E 6043888.76

RELOCATED PERIMETER CHAIN LINK FENCE, SEE DETAILS ON SHEET 00C001

CONC CURB & GUTTER, SEE DETAIL 1 / 00C005

PRIMARY CLARIFIER NO 2

MAINTENANCE CHEMICAL MANHOLE, SEE 00C004

STD DI8
N 2196147.42
E 6044021.94
GRATE EL 108.12

MATCHLINE BB – FOR CONTINUATION SEE DWG 02C105

MATCHLINE CC – FOR CONTINUATION SEE DWG 02C104

N

0 10' 20'

NOTES:

1. SPOT ELEVATIONS OF EXISTING GRADING AND PAVING ARE PROVIDED FOR REFERENCE AND ARE TO BE FOLLOWED FOR NEW GRADING AND PAVING WHERE NO OTHER DESIGN INPUT IS GIVEN.
2. SLOPE GRADE UNIFORMLY TO STORM DRAIN DROP INLETS WHEREVER SHOWN.

AREA 1	AREA 2
AREA 3	AREA 4
AREA 5	AREA 6

FILE: 215786-02C103.dwg
DATE: Oct 06, 2015-3:07:42pm, rsnider

HDR Engineering, Inc.

ISSUE	DATE	DESCRIPTION
A	JUNE 2015	ISSUED FOR BID

PROJECT MANAGER	C. OLSON
DESIGNED	M. PERINPANAYAGAM
DESIGNED	
CHECKED	C. OLSON
DRAWN	P. VAN MEURS
DATE	JUNE 30, 2015
PROJECT NUMBER	215786

REGISTERED PROFESSIONAL ENGINEER
CRAIG A. OLSON
NO. 39819
EXP. 12/31/15
CIVIL
STATE OF CALIFORNIA
06-30-15

CITY OF PINOLE CALIFORNIA 1903

PINOLE/HERCULES
WATER POLLUTION
CONTROL PLANT UPGRADE
CLIENT PN

CIVIL

GRADING AND PAVING PLAN AREA 3

0 1" 2"

FILENAME	215786-02C103
SCALE	1" = 10'

SHEET **02C103**

MATCHLINE AA – FOR CONTINUATION SEE DWG 02C102

MATCHLINE CC – FOR CONTINUATION SEE DWG 02C103

MATCHLINE BB – FOR CONTINUATION SEE DWG 02C106

CO-GEN

DIGESTER NO 2

DIGESTER NO 2

MAINTENANCE SHOP

PUBLIC WORKS BUILDING

BLOWER BUILDING

CONTROL BUILDING

FENCE

PLANT ENTRANCE GATE

EXISTING CONCRETE SLAB AT FILLING STATION

STD DI11
N 2196193.75
E 6044106.47
GRATE EL 108.19

EX MH

MH PD5
N 2196152.42
E 6044160.33

MH H2
N 2196127.31
E 6044182.39

MH PD6
N 2196112.74
E 6044226.00

STD DI10
N 2196103.11
E 6044207.41
GRATE EL 108.37

MH H1
N 2196104.04
E 6044161.45

MH PD4
N 2196196.12
E 6044088.01

STD DI12
N 2196138.86
E 6044056.98
GRATE EL 108.12

MH PD3
N 2196136.22
E 6044034.47

MH 3
N 2196061.85
E 6044123.48

MH P1
N 2196041.93
E 6044145.28

CONC CURB & GUTTER, SEE DETAIL 1 / 00C005

3' WIDE CONC VALLEY GUTTER PER DETAIL 7 / 00C005

PRECAST CONCRETE WHEELSTOP, TYP, SEE DETAIL ON SHEET 00C01

4" WHITE PAINTED STRIPE PER SPEC SECTION 02513, TYP

MATCH AC PAVING TO EXISTING CONCRETE PAVING, TYP

6" AC CURB PER DETAIL 2 / 00C001

MATCH AC PAVING TO EXISTING CONCRETE GUTTER, TYP

MATCH AC PAVING TO EXISTING SAWCUT EDGE, TYP

SAWCUT EXISTING AC PAVEMENT, TYP

SEE AC PAVING DETAIL, SHEET 00C001

RELOCATED PERIMETER CHAIN LINK FENCE, SEE DETAILS ON SHEET 00C001

27.7' TYP

9' TYP

45.6°

1.5'

N 2196072.56
E 6044325.97

N 2196056.51
E 6044310.60

N 2196057.64
E 6044273.64

N 2196036.36
E 6044276.00

N 2196005.42
E 6044247.79

N

0 10' 20'

NOTES:

1. SPOT ELEVATIONS OF EXISTING GRADING AND PAVING ARE PROVIDED FOR REFERENCE AND ARE TO BE FOLLOWED FOR NEW GRADING AND PAVING WHERE NO OTHER DESIGN INPUT IS GIVEN.
2. SLOPE GRADE UNIFORMLY TO STORM DRAIN DROP INLETS WHEREVER SHOWN.

AREA 1	AREA 2
AREA 3	AREA 4
AREA 5	AREA 6

FILE: 215786-02C104.dwg
DATE: Oct 06, 2015-3:08:21pm, rsnider

HDR Engineering, Inc.

ISSUE	DATE	DESCRIPTION
A	JUNE 2015	ISSUED FOR BID

PROJECT MANAGER	C. OLSON
DESIGNED	M. PERINPANAYAGAM
DESIGNED	
CHECKED	C. OLSON
DRAWN	P. VAN MEURS
DATE	JUNE 30, 2015
PROJECT NUMBER	215786

REGISTERED PROFESSIONAL ENGINEER
CRAIG A. OLSON
NO. 39819
EXP. 12/31/15
CIVIL
STATE OF CALIFORNIA
06-30-15

CITY OF PINOLE CALIFORNIA 1903

PINOLE/HERCULES
WATER POLLUTION
CONTROL PLANT UPGRADE
CLIENT PN

CIVIL

GRADING AND PAVING PLAN AREA 4

0 1" 2"

FILENAME	215786-02C104
SCALE	1" = 10'

SHEET **02C104**

MATCHLINE BB – FOR CONTINUATION SEE DWG 02C103

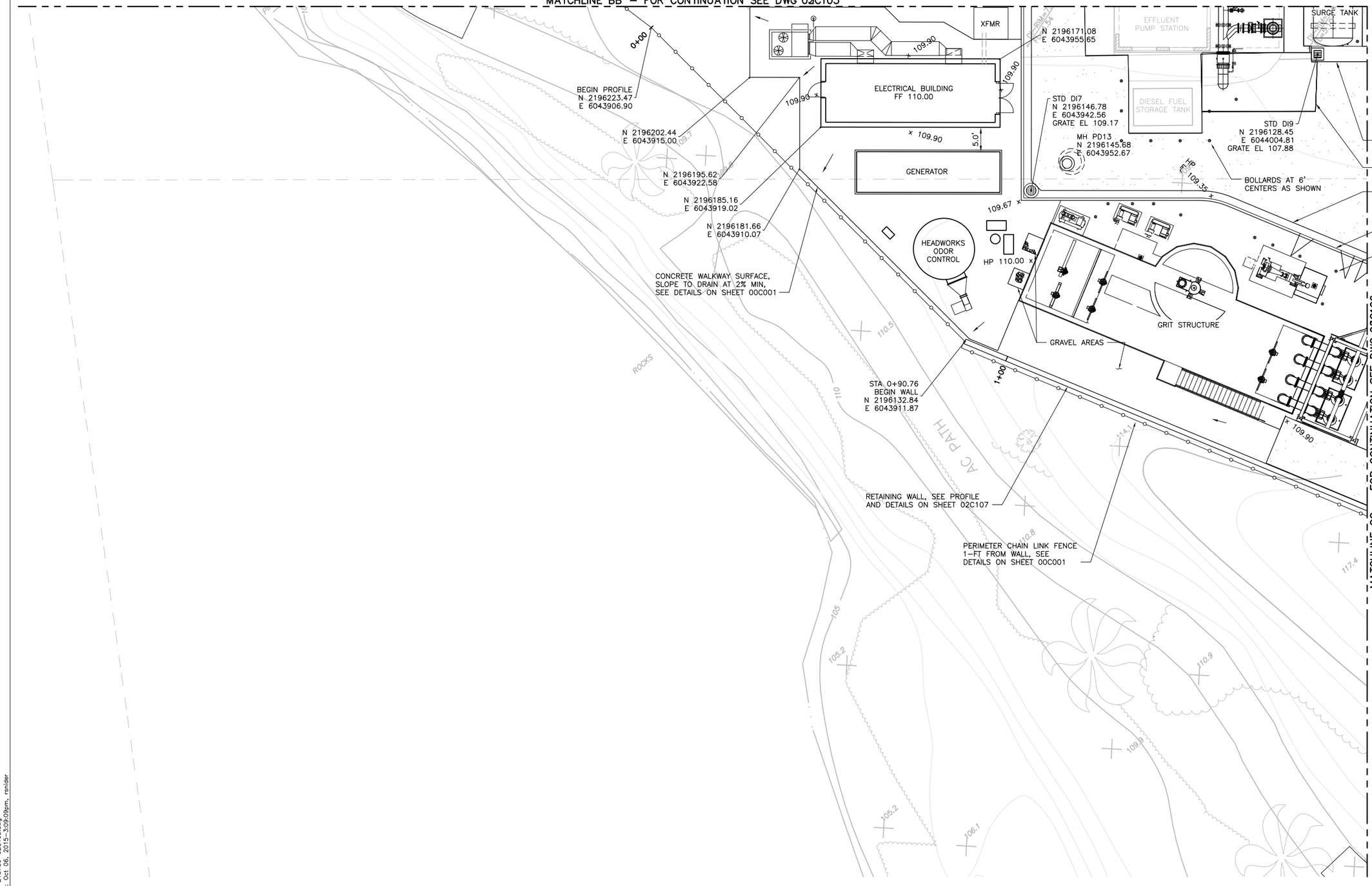

NOTES:

1. SPOT ELEVATIONS OF EXISTING GRADING AND PAVING ARE PROVIDED FOR REFERENCE AND ARE TO BE FOLLOWED FOR NEW GRADING AND PAVING WHERE NO OTHER DESIGN INPUT IS GIVEN.
2. SLOPE GRADE UNIFORMLY TO STORM DRAIN DROP INLETS WHEREVER SHOWN.

AREA 1	AREA 2
AREA 3	AREA 4
AREA 5	AREA 6

FILE: 215786-02C105.dwg
DATE: Oct 06, 2015 - 3:09:09pm, rsnider

HDR Engineering, Inc.

ISSUE	DATE	DESCRIPTION
A	JUNE 2015	ISSUED FOR BID

PROJECT MANAGER	C. OLSON
DESIGNED	M. PERINPANAYAGAM
DESIGNED	
CHECKED	C. OLSON
DRAWN	P. VAN MEURS
DATE	JUNE 30, 2015
PROJECT NUMBER	215786

REGISTERED PROFESSIONAL ENGINEER
CRAIG A. OLSON
NO. 39819
EXP. 12/31/15
CIVIL
STATE OF CALIFORNIA
06-30-15

CITY OF PINOLE CALIFORNIA 1903

PINOLE/HERCULES
WATER POLLUTION
CONTROL PLANT UPGRADE
CLIENT PN

CIVIL

GRADING AND PAVING PLAN AREA 5

0 1" 2"

FILENAME	215786-02C105
SCALE	1" = 10'

SHEET **02C105**

MATCHLINE BB – FOR CONTINUATION SEE DWG 02C104

MATCHLINE CC – FOR CONTINUATION SEE DWG 02C105

MATCH AC PAVING TO EXISTING CONCRETE GUTTER, TYP

MATCH AC PAVING TO EXISTING CONCRETE GUTTER, TYP

4+00

MH PD2
N 2196100.72
E 6044002.74

MH PDFM
N 2196082.69
E 6044011.39

MH 2
N 2196020.73
E 6044086.46

HP 109.30

x 109.90

DENSE TREES AND BRUSH GROUND NOT VISIBLE

STA 3+81.74
END WALL/BEGIN FENCE
N 2195996.44
E 6044119.37

N 2195995.83
E 6044110.69

CONC CURB & GUTTER, SEE DETAIL 1 / 00C005

CONC APRON PER DETAIL, SHEET 00C001

MH PD1
N 2196057.06
E 6044023.69

LOWERED CURB, SEE DETAIL SHEET 00C001

HP 109.90 x

PUBLIC WORKS BUILDING

HP 109.60

N 2196004.17
E 6044055.86

HP 109.35

FERRIC CHLORIDE CHEMICAL STORAGE & FEED

HEADWORKS

109.90 x

N 2195979.28
E 6044063.19

MH 1
N 2196015.72
E 6043990.84

PUBLIC RESTROOM

AC PARKING

2+00

x 110.10

A / 02C107

N 2196014.16
E 6043968.81

STD DI14
N 2196027.91
E 6043967.43
GRATE EL 108.90

RETAINING WALL, SEE PROFILE AND DETAILS ON SHEET 02C107

PERIMETER CHAIN LINK FENCE 1-FT FROM WALL, SEE DETAILS ON SHEET 00C001

AC PATH

N

0 10' 20'

NOTES:

1. SPOT ELEVATIONS OF EXISTING GRADING AND PAVING ARE PROVIDED FOR REFERENCE AND ARE TO BE FOLLOWED FOR NEW GRADING AND PAVING WHERE NO OTHER DESIGN INPUT IS GIVEN.
2. SLOPE GRADE UNIFORMLY TO STORM DRAIN DROP INLETS WHEREVER SHOWN.

AREA 1	AREA 2
AREA 3	AREA 4
AREA 5	AREA 6

FILE: 215786-02C106.dwg
DATE: Oct 06, 2015-3:09:47pm, renider

HDR Engineering, Inc.

ISSUE	DATE	DESCRIPTION
A	JUNE 2015	ISSUED FOR BID

PROJECT MANAGER	C. OLSON
DESIGNED	M. PERINPANAYAGAM
DESIGNED	
CHECKED	C. OLSON
DRAWN	P. VAN MEURS
DATE	JUNE 30, 2015
PROJECT NUMBER	215786

REGISTERED PROFESSIONAL ENGINEER
CRAIG A. OLSON
NO. 39819
EXP. 12/31/15
CIVIL
STATE OF CALIFORNIA
06-30-15

CITY OF PINOLE CALIFORNIA 1903

PINOLE/HERCULES
WATER POLLUTION
CONTROL PLANT UPGRADE
CLIENT PN

CIVIL

GRADING AND PAVING PLAN
AREA 6

0 1" 2"

FILENAME	215786-02C106
SCALE	1" = 10'

SHEET
02C106

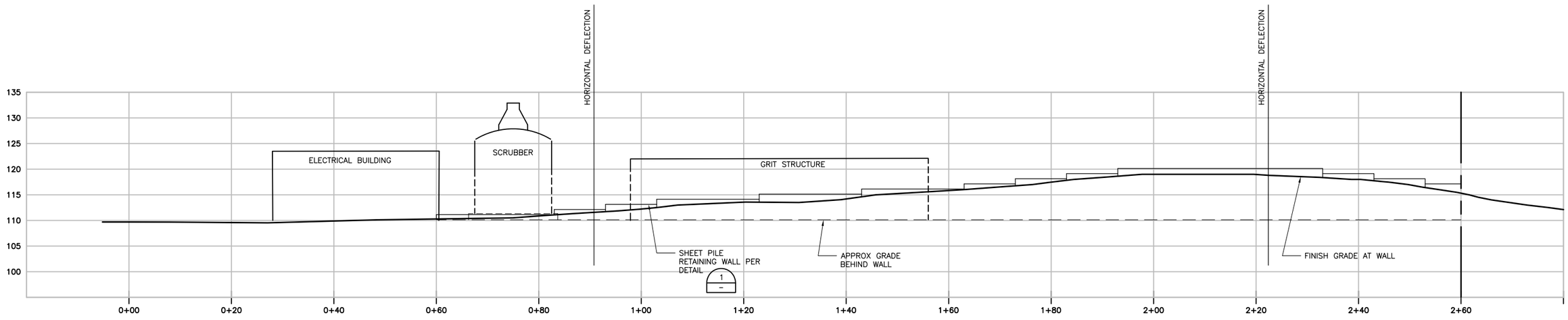

RETAINING WALL PROFILE

1" = 10'

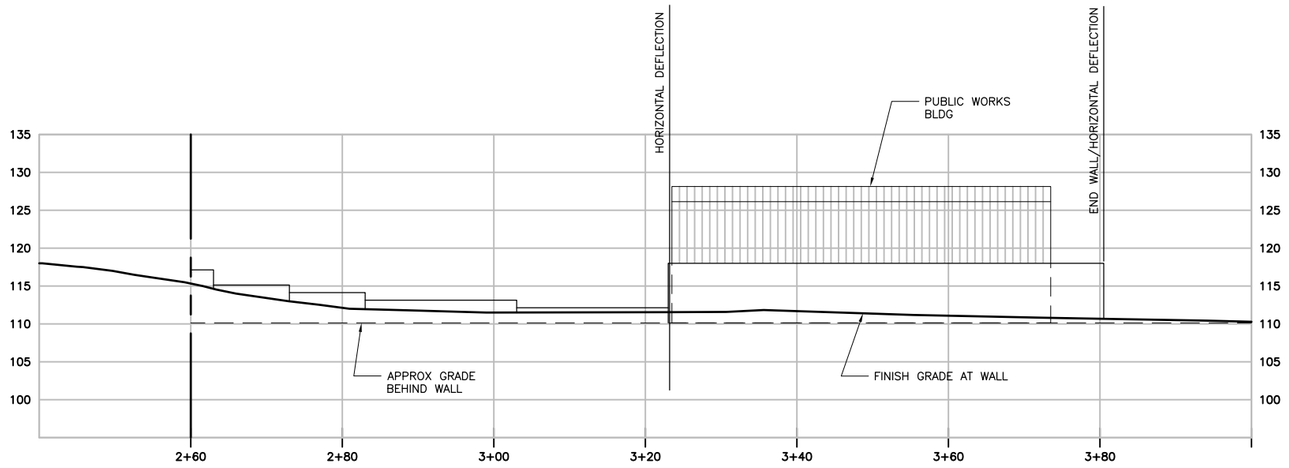

(CONTINUED) RETAINING WALL PROFILE

1" = 10'

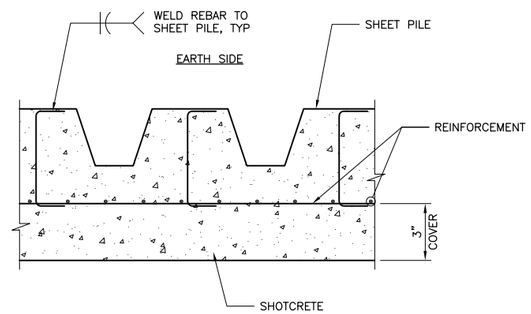

SECTIONAL PLAN VIEW SHEET PILE RETAINING WALL

1 / –

NONE

FILE: 215786-02C107.dwg
DATE: Oct 06, 2015-3:10:04pm, rsnider

HDR Engineering, Inc.

ISSUE	DATE	DESCRIPTION
A	JUNE 2015	ISSUED FOR BID

PROJECT MANAGER	C. OLSON
DESIGNED	M. PERINPAYANAGAM
DESIGNED	
CHECKED	C. OLSON
DRAWN	P. VAN MEURS
DATE	JUNE 30, 2015
PROJECT NUMBER	215786

REGISTERED PROFESSIONAL ENGINEER
CRAIG A. OLSON
NO. 39819
EXP. 12/31/15
CIVIL
STATE OF CALIFORNIA
04-30-15

CITY OF PINOLE CALIFORNIA 1903

PINOLE/HERCULES
WATER POLLUTION
CONTROL PLANT UPGRADE
CLIENT PN

CIVIL

RETAINING WALL PROFILE AND DETAIL

0 1" 2"

FILENAME	215786-02C107
SCALE	AS NOTED

SHEET **02C107**

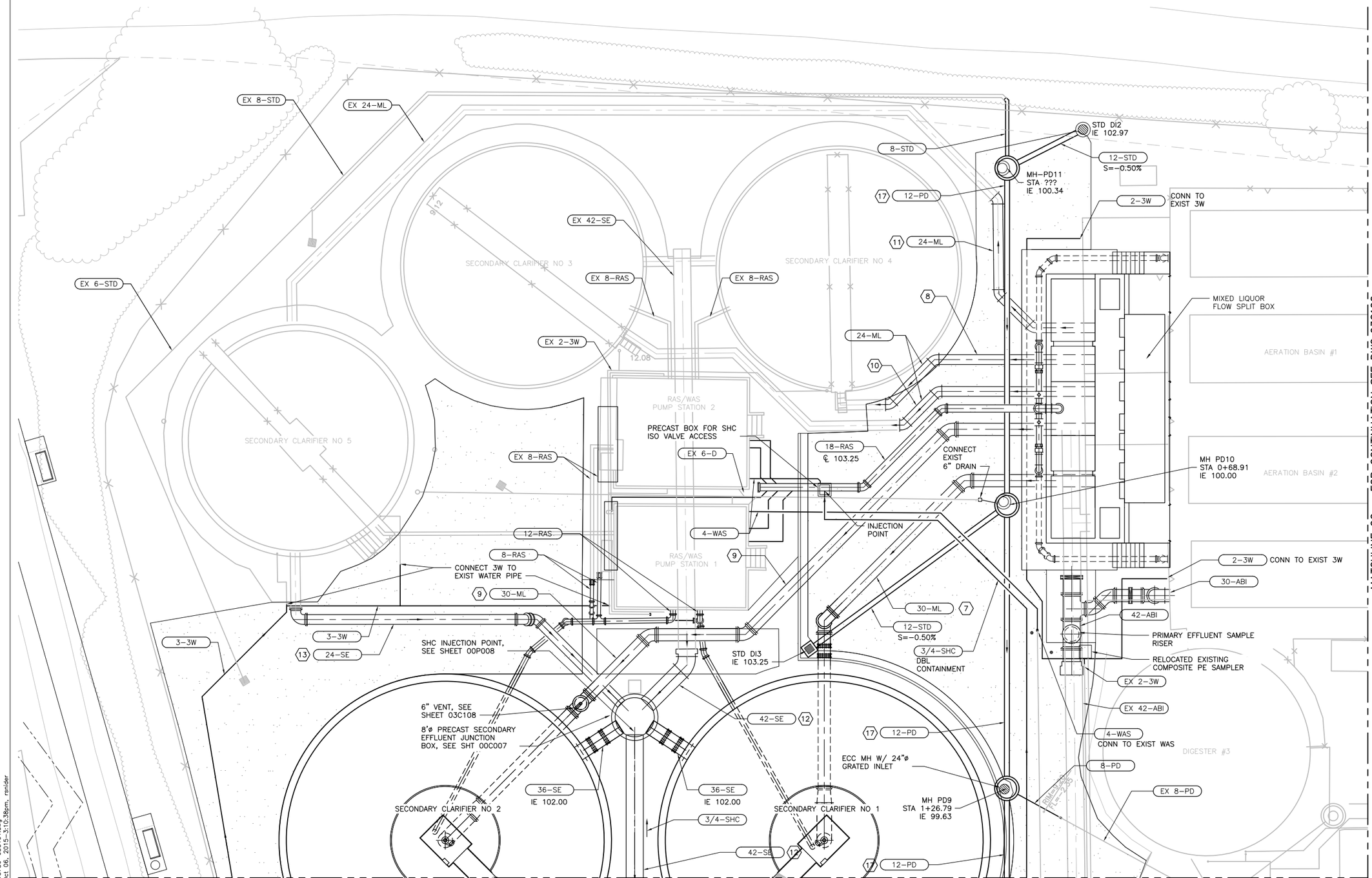

MATCHLINE CC – FOR CONTINUATION SEE DWG 03C102

MATCHLINE AA – FOR CONTINUATION SEE DWG 03C103

LEGEND

(X) DENOTES PROFILE AS SHOWN ON SHEETS 03C107 THROUGH 03C110

GENERAL NOTES:

1. EXISTING SITE CONDITION MAY DIFFER FROM RECORD DRAWINGS. CONTRACTOR TO FIELD VERIFY EXISTING PIPE SIZE, ELEVATION, AND MATERIAL.
2. PIPES TO BE BURIED MINIMUM 3-FOOT BELOW FINISH GRADE UNLESS NOTED OTHERWISE.
3. NOT ALL PIPES ARE SHOWN IN PIPE PROFILES. SEE YARD PIPING PLAN DRAWINGS.
4. CONTRACTOR TO FIELD VERIFY EXISTING PIPE LOCATIONS, ELEVATIONS, AND MATERIAL.
5. PROVIDE TRANSITION COUPLING AT LOCATIONS WHERE PIPE CONNECTS TO EXISTING PIPE AND MATERIALS ARE DIFFERENT.
6. REROUTE OR RELOCATE EXISTING PRESSURE PIPES TO ACCOMMODATE GRAVITY PIPE INSTALLATION UNLESS NOTED OTHERWISE.
7. PROVIDE AIR RELEASE VALVES AT HIGH POINTS OF PRESSURE PIPES.

AREA 1	AREA 2
AREA 3	AREA 4
AREA 5	AREA 6

FILE: 215786-03C101.dwg
DATE: Oct 06, 2015 - 3:10:38pm, raniderr

HDR Engineering, Inc.

ISSUE	DATE	DESCRIPTION
A	JUNE 2015	ISSUED FOR BID

PROJECT MANAGER	C. OLSON
DESIGNED	M. PERINPANAYAGAM
DESIGNED	
CHECKED	C. OLSON
DRAWN	P. VAN MEURS
DATE	JUNE 30, 2015
PROJECT NUMBER	215786

REGISTERED PROFESSIONAL ENGINEER CRAIG A. OLSON NO. 39819 EXP. 12/31/15 CIVIL STATE OF CALIFORNIA 06-30-15

CITY OF PINOLE CALIFORNIA 1903

PINOLE/HERCULES WATER POLLUTION CONTROL PLANT UPGRADE CLIENT PN

CIVIL

YARD PIPING PLAN AREA 1

0 1" 2"

FILENAME	215786-03C101
SCALE	1" = 10'

SHEET **03C101**

MATCHLINE CC – FOR CONTINUATION SEE DWG 03C101

FENCE

AERATION BASIN #1

AERATION BASIN #2

AERATION BASIN NO 1

AERATION BASIN NO 2

HB1 W/ RAIL–MOUNTED HOSE RACK AT WALKWAY

HB1

2–3W

3–3W

4–3W

6–PSL

6–TS

CONN TO EXIST 6–TS

6" FLUSHING HYDRANT W/ 4" HOSE CONN

6–4W

4–PSC

2–1W

3–3W

2–2W

3–4W

MH PD7
STA 0+04.79
IE 100.36

STD MH1
IE 102.36

12–PD

STD MH2
IE 102.73

HB1 W/ RAIL–MOUNTED HOSE RACK AT LANDING

GRAVITY SOLIDS THICKENER

HB

10–FA

2–3W

FH

GV

6x3

18–LPA

CONN TO EXIST 4–PSC

CONN TO EXIST 6–PSL

ESEW

EX 2–2W

6–WAS

DIGESTER NO 3

EXIST MH 8
INV 99.76

EX 4–3W

EX 8–PD

EX 6–DS

SOLIDS HANDLING BUILDING

SOLIDS TRUCK LOADING STATION

22–FA

ODOR CONTROL SYSTEM, SEE SHT 63P101

12–PD

6–DS

CONN TO EXIST 6–WAS

CAP EXIST 4" WATER PIPE

18–PD

16

PUBLIC WORKS BUILDING

STD DI1
IE 103.23

MATCHLINE AA – FOR CONTINUATION SEE DWG 03C104

N

0 10' 20'

LEGEND

(X) DENOTES PROFILE AS SHOWN ON SHEETS 03C107 THROUGH 03C110

GENERAL NOTES:

1. EXISTING SITE CONDITION MAY DIFFER FROM RECORD DRAWINGS. CONTRACTOR TO FIELD VERIFY EXISTING PIPE SIZE, ELEVATION, AND MATERIAL.
2. PIPES TO BE BURIED MINIMUM 3–FOOT BELOW FINISH GRADE UNLESS NOTED OTHERWISE.
3. NOT ALL PIPES ARE SHOWN IN PIPE PROFILES. SEE YARD PIPING PLAN DRAWINGS.
4. CONTRACTOR TO FIELD VERIFY EXISTING PIPE LOCATIONS, ELEVATIONS, AND MATERIAL.
5. PROVIDE TRANSITION COUPLING AT LOCATIONS WHERE PIPE CONNECTS TO EXISTING PIPE AND MATERIALS ARE DIFFERENT.
6. REROUTE OR RELOCATE EXISTING PRESSURE PIPES TO ACCOMMODATE GRAVITY PIPE INSTALLATION UNLESS NOTED OTHERWISE.
7. PROVIDE AIR RELEASE VALVES AT HIGH POINTS OF PRESSURE PIPES.

AREA 1	AREA 2
AREA 3	AREA 4
AREA 5	AREA 6

FILE: 215786–03C102.dwg
DATE: Oct 06, 2015–3:11:24pm, rsnider

HDR Engineering, Inc.

ISSUE	DATE	DESCRIPTION
A	JUNE 2015	ISSUED FOR BID

PROJECT MANAGER	C. OLSON
DESIGNED	M. PERINPANAYAGAM
DESIGNED	
CHECKED	C. OLSON
DRAWN	P. VAN MEURS
DATE	JUNE 30, 2015
PROJECT NUMBER	215786

REGISTERED PROFESSIONAL ENGINEER
CRAIG A. OLSON
NO. 39819
EXP. 12/31/15
CIVIL
STATE OF CALIFORNIA
06-30-15

CITY OF PINOLE CALIFORNIA 1903

PINOLE/HERCULES
WATER POLLUTION
CONTROL PLANT UPGRADE
CLIENT PN

CIVIL

YARD PIPING PLAN
AREA 2

0 1" 2"

FILENAME	215786–03C102
SCALE	1" = 10'

SHEET 03C102

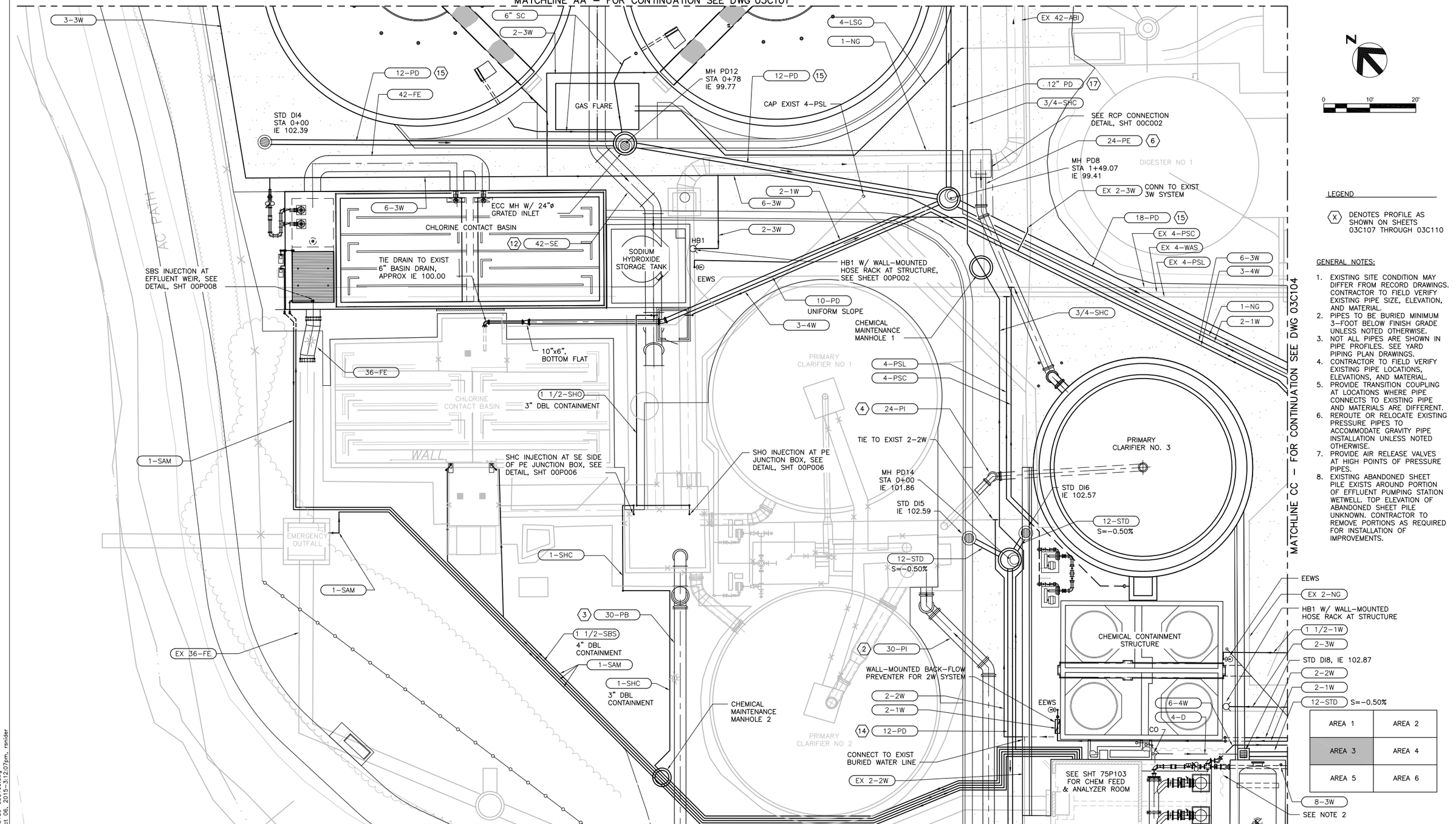

LEGEND

(X) DENOTES PROFILE AS SHOWN ON SHEETS 03C107 THROUGH 03C110

GENERAL NOTES:

1. EXISTING SITE CONDITION MAY DIFFER FROM RECORD DRAWINGS. CONTRACTOR TO FIELD VERIFY EXISTING PIPE SIZE, ELEVATION, AND MATERIAL.
2. PIPES TO BE BURIED MINIMUM 3-FOOT BELOW FINISH GRADE UNLESS NOTED OTHERWISE.
3. NOT ALL PIPES ARE SHOWN IN PIPE PROFILES. SEE YARD PIPING PLAN DRAWINGS.
4. CONTRACTOR TO FIELD VERIFY EXISTING PIPE LOCATIONS, ELEVATIONS, AND MATERIAL.
5. PROVIDE TRANSITION COUPLING AT LOCATIONS WHERE PIPE CONNECTS TO EXISTING PIPE AND MATERIALS ARE DIFFERENT.
6. REROUTE OR RELOCATE EXISTING PRESSURE PIPES TO ACCOMMODATE GRAVITY PIPE INSTALLATION UNLESS NOTED OTHERWISE.
7. PROVIDE AIR RELEASE VALVES AT HIGH POINTS OF PRESSURE PIPES.
8. EXISTING ABANDONED SHEET PILE EXISTS AROUND PORTION OF EFFLUENT PUMPING STATION WETWELL. TOP ELEVATION OF ABANDONED SHEET PILE UNKNOWN. CONTRACTOR TO REMOVE PORTIONS AS REQUIRED FOR INSTALLATION OF IMPROVEMENTS.

FILE: 215786-03C103.dwg
DATE: Oct 06, 2015-3:12:07pm, ranider

HDR Engineering, Inc.

ISSUE	DATE	DESCRIPTION
A	JUNE 2015	ISSUED FOR BID

PROJECT MANAGER	C. OLSON
DESIGNED	M. PERINPANAYAGAM
DESIGNED	
CHECKED	C. OLSON
DRAWN	P. VAN MEURS
DATE	JUNE 30, 2015
PROJECT NUMBER	215786

REGISTERED PROFESSIONAL ENGINEER
CRAIG A. OLSON
NO. 39819
EXP. 12/31/15
CIVIL
STATE OF CALIFORNIA
06-30-15

CITY OF PINOLE CALIFORNIA 1903

PINOLE/HERCULES
WATER POLLUTION
CONTROL PLANT UPGRADE
CLIENT PN

CIVIL

YARD PIPING PLAN
AREA 3

0 1" 2"

FILENAME	215786-03C103
SCALE	1" = 10'

SHEET
03C103

MATCHLINE AA – FOR CONTINUATION SEE DWG 03C102

MATCHLINE CC – FOR CONTINUATION SEE DWG 03C103

MATCHLINE BB – FOR CONTINUATION SEE DWG 03C106

18–LPA
EX 4–WAS
EX 2–2W
6–4W
2–1W CONNECT TO EXIST
EX 2–1W
16 18–PD
18–PD 16
EX 1–1W
EX 4–SS
MH PD6 STA 1+17.94 IE 99.80
12–STD S=–0.50%
EX 24–IS HERCULES SEWER
EX 2–1W
EX 6–3W
EX 8–PD
EX 12–D
RELOCATED NG METER, COORDINATE W/UTILITY
2–NG
MH PD5 STA 1+94.67 IE 99.47
EX 4–WAS
EX 4–PSL
EX 4–PSC
EX MH 7 IE 99.47
12–PD
EX 12–D
24–IS 1
STD DI10 IE 103.12
STD DI11 IE 102.94
12–STD S=–0.50%
6–4W
18–PD 16
EX 2–1W
EX 8–3W
MH H2 STA 0+53.21 IE 100.12
CONNECT TO EXIST 6–SS/STD
CLEANOUT PER DETAIL, SHEET 00C002
CONN TO EXIST SEWER N 2196098.25 E 6044226.96 SEE NOTE 2
EX 6–STD
MH PD4 STA 2+38.91 IE 99.09
MC TYP
1–NG CONNECT TO EXIST 2" NG
2–1W CONNECT TO EXIST 2" 1W
6–3W CONNECT TO EXIST 8" 4W, CONVERTED TO 3W
2–2W CONNECT TO EXIST 2" 2W
24–PD 15
EX 2–NG
EX 8–3W
6–4W
EX 18–LPA
18–LPA
30–IS 1 HERCULES SEWER
EX 2–NG RELOCATE AS NEEDED
MH H1 (FLOW MEASUREMENT) STA 0+84.51 IE 100.06
30–IS 1 HERCULES SEWER
STA 0+00 CONNECT TO EXIST 30" PINOLE SEWER SEE NOTE 2
EX 3–1W
EX 2–1W
2" 1W BRANCH TO EEWS
2" 1W BRANCH TO EEWS & 2W BFP
12–STD S=–0.50%
STD DI12 IE 102.89
MH PD3 STA 3+19.24 IE 98.73
MH 3 STA 1+41.27 IE 97.45
MH P1 (FLOW MEASUREMENT) STA 0+25.06 IE 97.54
EX 30–IS PINOLE SEWER
1 36–IS
30–IS 5 PINOLE SEWER
EX 3–1W
4–3W
N 2196025.08 E 6044163.83
8x4 MC
CONNECTION TO EXIST 8"–4W, CONVERTED TO 3W
24–PD 15
EX 3–1W
4–3W

DIGESTER BUILDING
DIGESTER #2
POLYMER STORAGE
PUBLIC WORKS BUILDING
BLOWER BLDG
CONTROL BLDG
FENCE

N

0 10' 20'

LEGEND

X DENOTES PROFILE AS SHOWN ON SHEETS 03C107 THROUGH 03C110

GENERAL NOTES:

1. EXISTING SITE CONDITION MAY DIFFER FROM RECORD DRAWINGS. CONTRACTOR TO FIELD VERIFY EXISTING PIPE SIZE, ELEVATION, AND MATERIAL.
2. PIPES TO BE BURIED MINIMUM 3–FOOT BELOW FINISH GRADE UNLESS NOTED OTHERWISE.
3. NOT ALL PIPES ARE SHOWN IN PIPE PROFILES. SEE YARD PIPING PLAN DRAWINGS.
4. CONTRACTOR TO FIELD VERIFY EXISTING PIPE LOCATIONS, ELEVATIONS, AND MATERIAL.
5. PROVIDE TRANSITION COUPLING AT LOCATIONS WHERE PIPE CONNECTS TO EXISTING PIPE AND MATERIALS ARE DIFFERENT.
6. REROUTE OR RELOCATE EXISTING PRESSURE PIPES TO ACCOMMODATE GRAVITY PIPE INSTALLATION UNLESS NOTED OTHERWISE.
7. PROVIDE AIR RELEASE VALVES AT HIGH POINTS OF PRESSURE PIPES.
8. EXISTING PINOLE AND HERCULES INFLUENT SEWER PIPELINES ARE ASBESTOS CONCRETE PIPE (ACP). REFER TO SECTION 15072 FOR REMOVAL OF ACP.

AREA 1	AREA 2
AREA 3	AREA 4
AREA 5	AREA 6

FILE: 215786–03C104.dwg
DATE: Oct 06, 2015–3:12:52pm, rsnider

HDR Engineering, Inc.

ISSUE	DATE	DESCRIPTION
A	JUNE 2015	ISSUED FOR BID

PROJECT MANAGER	C. OLSON
DESIGNED	M. PERINPANAYAGAM
DESIGNED	
CHECKED	C. OLSON
DRAWN	P. VAN MEURS
DATE	JUNE 30, 2015
PROJECT NUMBER	215786

REGISTERED PROFESSIONAL ENGINEER CRAIG A. OLSON NO. 39819 EXP. 12/31/15 CIVIL STATE OF CALIFORNIA 06-30-15

CITY OF PINOLE CALIFORNIA 1903

PINOLE/HERCULES
WATER POLLUTION
CONTROL PLANT UPGRADE
CLIENT PN

CIVIL

YARD PIPING PLAN AREA 4

0 1" 2"

FILENAME	215786–03C104
SCALE	1" = 10'

SHEET **03C104**

MATCHLINE BB – FOR CONTINUATION SEE DWG 03C103

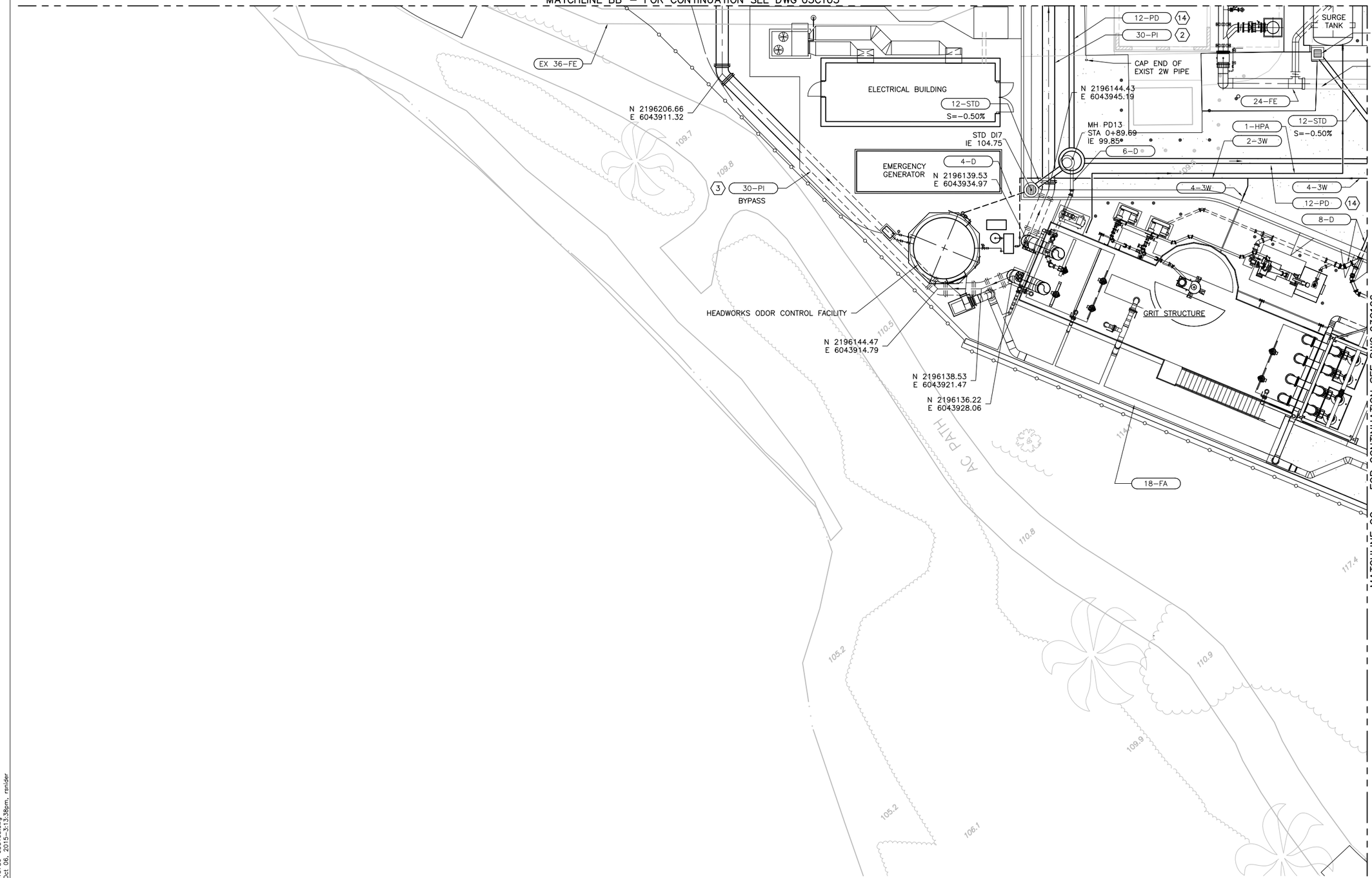

MATCHLINE CC – FOR CONTINUATION SEE DWG 03C106

LEGEND

(X) DENOTES PROFILE AS SHOWN ON SHEETS 03C107 THROUGH 03C110

GENERAL NOTES:

1. EXISTING SITE CONDITION MAY DIFFER FROM RECORD DRAWINGS. CONTRACTOR TO FIELD VERIFY EXISTING PIPE SIZE, ELEVATION, AND MATERIAL.
2. PIPES TO BE BURIED MINIMUM 3–FOOT BELOW FINISH GRADE UNLESS NOTED OTHERWISE.
3. NOT ALL PIPES ARE SHOWN IN PIPE PROFILES. SEE YARD PIPING PLAN DRAWINGS.
4. CONTRACTOR TO FIELD VERIFY EXISTING PIPE LOCATIONS, ELEVATIONS, AND MATERIAL.
5. PROVIDE TRANSITION COUPLING AT LOCATIONS WHERE PIPE CONNECTS TO EXISTING PIPE AND MATERIALS ARE DIFFERENT.
6. REROUTE OR RELOCATE EXISTING PRESSURE PIPES TO ACCOMMODATE GRAVITY PIPE INSTALLATION UNLESS NOTED OTHERWISE.
7. PROVIDE AIR RELEASE VALVES AT HIGH POINTS OF PRESSURE PIPES.

AREA 1	AREA 2
AREA 3	AREA 4
AREA 5	AREA 6

FILE: 215786–03C105.dwg
DATE: Oct 06, 2015–3:13:38pm, rsnider

HDR Engineering, Inc.

ISSUE	DATE	DESCRIPTION
A	JUNE 2015	ISSUED FOR BID

PROJECT MANAGER	C. OLSON
DESIGNED	M. PERINPANAYAGAM
DESIGNED	
CHECKED	C. OLSON
DRAWN	P. VAN MEURS
DATE	JUNE 30, 2015
PROJECT NUMBER	215786

REGISTERED PROFESSIONAL ENGINEER
CRAIG A. OLSON
NO. 39819
EXP. 12/31/15
CIVIL
STATE OF CALIFORNIA
06-30-15

CITY OF PINOLE CALIFORNIA 1903

PINOLE/HERCULES
WATER POLLUTION
CONTROL PLANT UPGRADE
CLIENT PN

CIVIL

YARD PIPING PLAN AREA 5

0 1" 2"

FILENAME	215786–03C105
SCALE	1" = 10'

SHEET **03C105**

MATCHLINE BB – FOR CONTINUATION SEE DWG 03C104

MATCHLINE CC – FOR CONTINUATION SEE DWG 03C105

4–3W

24–PD (15)

12–STD

MH PD2
STA 3+66.86
IE 98.51

MH PDFM
STA 1+76.99
IE 98.44

24–PD (14)

12–PD (14)

8–D

SEE HEADWORKS
SHT 13P102

MH PD1
STA 2+05.42
IE 98.28

HB1 HOSE BIBB
W/ALL–MOUNTED
HOSE RACK

FERRIC
CHLORIDE
STORAGE

HB1

HEADWORKS

EEWS

CONNECT TO EXIST 3" 1W

(1) 36–IS

MH 2
STA 1+96.60
IE 97.29

2–1W

PUBLIC
WORKS
BUILDING

(1) 36–IS

1 1/2–1W

4–SS
S=.010

CLEANOUT PER DETAIL,
SHEET 00C002

PACKAGE
PUBLIC
RESTROOM

MH 1
STA 2+92.35
IE 97.05

N 2196039.75
E 6043989.94

PROVIDE 2" PVC CARRIER
PIPE FOR SAMPLE TUBING

N 2196029.94
E 6043984.02

EX 24–FE
RODEO
EXPORT PIPELINE

AC PATH

N

0 10' 20'

LEGEND

(X) DENOTES PROFILE AS SHOWN ON SHEETS 03C107 THROUGH 03C110

GENERAL NOTES:

1. EXISTING SITE CONDITION MAY DIFFER FROM RECORD DRAWINGS. CONTRACTOR TO FIELD VERIFY EXISTING PIPE SIZE, ELEVATION, AND MATERIAL.
2. PIPES TO BE BURIED MINIMUM 3–FOOT BELOW FINISH GRADE UNLESS NOTED OTHERWISE.
3. NOT ALL PIPES ARE SHOWN IN PIPE PROFILES. SEE YARD PIPING PLAN DRAWINGS.
4. CONTRACTOR TO FIELD VERIFY EXISTING PIPE LOCATIONS, ELEVATIONS, AND MATERIAL.
5. PROVIDE TRANSITION COUPLING AT LOCATIONS WHERE PIPE CONNECTS TO EXISTING PIPE AND MATERIALS ARE DIFFERENT.
6. REROUTE OR RELOCATE EXISTING PRESSURE PIPES TO ACCOMMODATE GRAVITY PIPE INSTALLATION UNLESS NOTED OTHERWISE.
7. PROVIDE AIR RELEASE VALVES AT HIGH POINTS OF PRESSURE PIPES.

AREA 1	AREA 2
AREA 3	AREA 4
AREA 5	AREA 6

FILE: 215786–03C106.dwg
DATE: Oct 06, 2015–3:14:42pm, rsnider

HDR Engineering, Inc.

ISSUE	DATE	DESCRIPTION
A	JUNE 2015	ISSUED FOR BID

PROJECT MANAGER	C. OLSON
DESIGNED	M. PERINPANAYAGAM
DESIGNED	
CHECKED	C. OLSON
DRAWN	P. VAN MEURS
DATE	JUNE 30, 2015
PROJECT NUMBER	215786

REGISTERED PROFESSIONAL ENGINEER
CRAIG A. OLSON
NO. 39819
EXP. 12/31/15
CIVIL
STATE OF CALIFORNIA
06-30-15

CITY OF PINOLE CALIFORNIA 1903

PINOLE/HERCULES
WATER POLLUTION
CONTROL PLANT UPGRADE
CLIENT PN

CIVIL

YARD PIPING PLAN
AREA 6

0 1" 2"

FILENAME	215786–03C106
SCALE	1" = 10'

SHEET
03C106

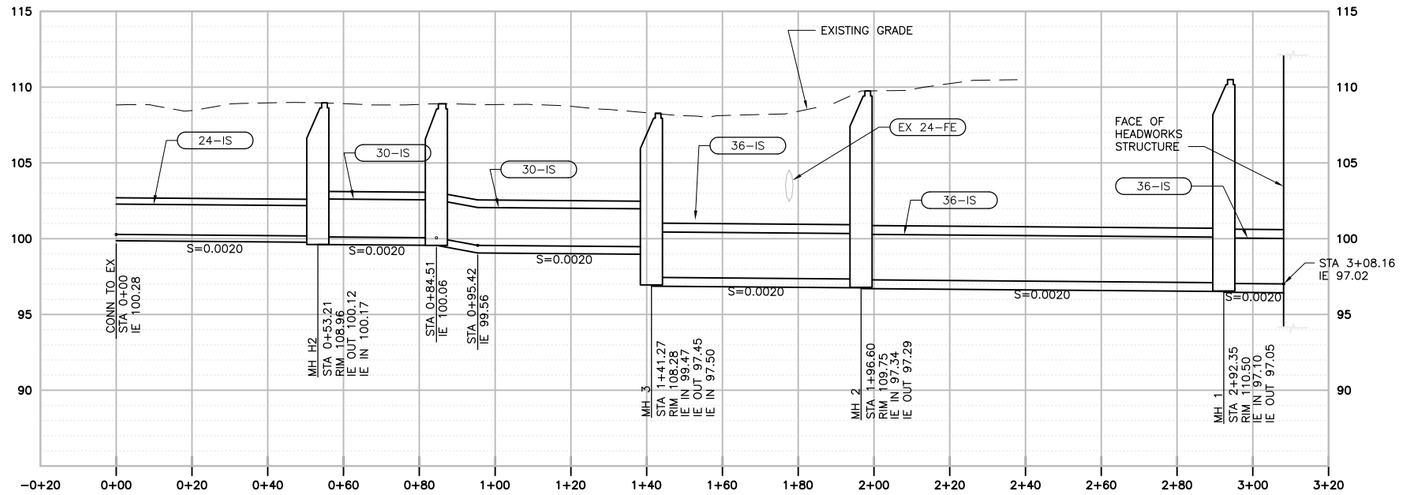

PIPING PROFILE
HERCULES 24"/30"/36" INFLUENT SEWER (1)
1"=20' HORIZ; 1"=5' VERT

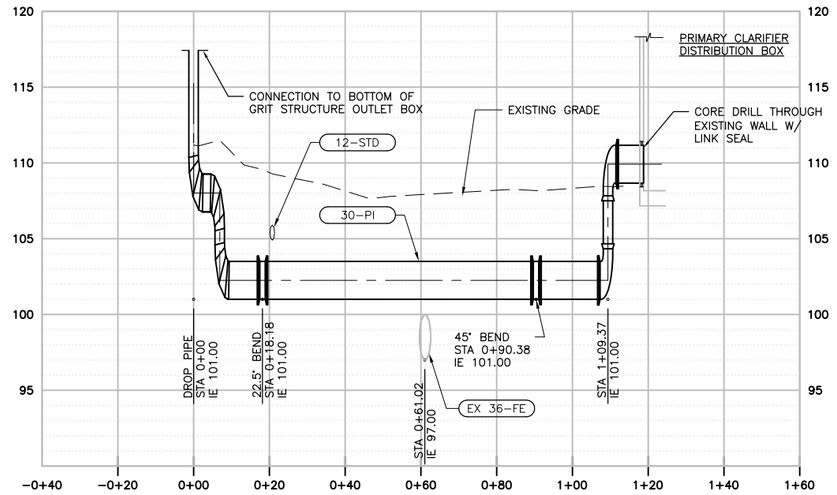

PIPING PROFILE
30" PRIMARY CLARIFIER INFLUENT (2)
1"=20' HORIZ; 1"=5' VERT

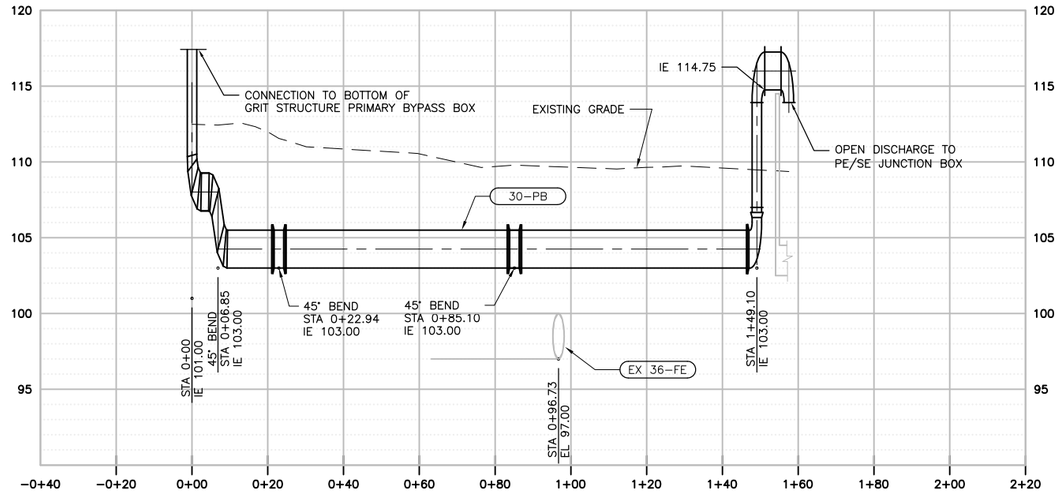

PIPING PROFILE
30" PRIMARY CLARIFIER BYPASS (3)
1"=20' HORIZ; 1"=5' VERT

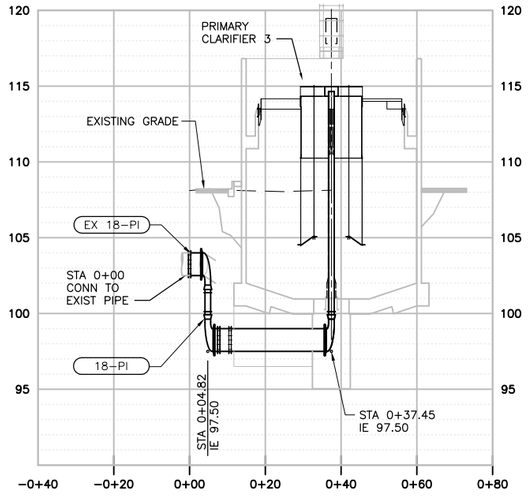

PIPING PROFILE
18" PRIMARY CLARIFIER 3 INFLUENT (4)
1"=20' HORIZ; 1"=5' VERT

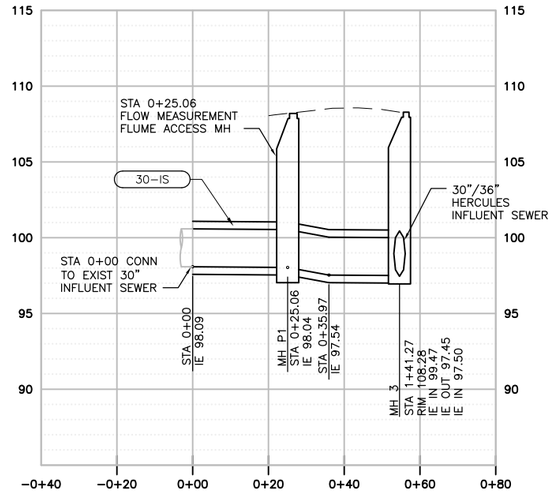

PIPING PROFILE
30" PINOLE INFLUENT SEWER (5)
1"=20' HORIZ; 1"=5' VERT

NOTE:
YARD PIPING PLANS DEPICT EXISTING AND PROPOSED GRAVITY PROCESS AND PLANT DRAIN PIPES. NOT ALL EXISTING AND PROPOSED PIPES AND UTILITIES ARE SHOWN ON YARD PIPING PROFILES. CONTRACTOR TO LOCATE ALL EXISTING PIPES AND UTILITIES PRIOR TO CONSTRUCTION.

FILE: 215786-03C107.dwg
DATE: Oct 06, 2015 - 3:15:02pm, rsnider

HDR Engineering, Inc.

ISSUE	DATE	DESCRIPTION
A	JUNE 2015	ISSUED FOR BID

PROJECT MANAGER	C. OLSON
DESIGNED	M. PERINPANAYAGAM
DESIGNED	
CHECKED	C. OLSON
DRAWN	P. VAN MEURS
DATE	JUNE 30, 2015
PROJECT NUMBER	215786

REGISTERED PROFESSIONAL ENGINEER
CRAIG A. OLSON
NO. 39819
EXP. 12/31/15
CIVIL
STATE OF CALIFORNIA
06-30-15

CITY OF PINOLE CALIFORNIA 1903

PINOLE/HERCULES
WATER POLLUTION
CONTROL PLANT UPGRADE
CLIENT PN

CIVIL

YARD PIPING - PROFILES 1

0 1" 2"

FILENAME	215786-03C107
SCALE	AS NOTED

SHEET
03C107

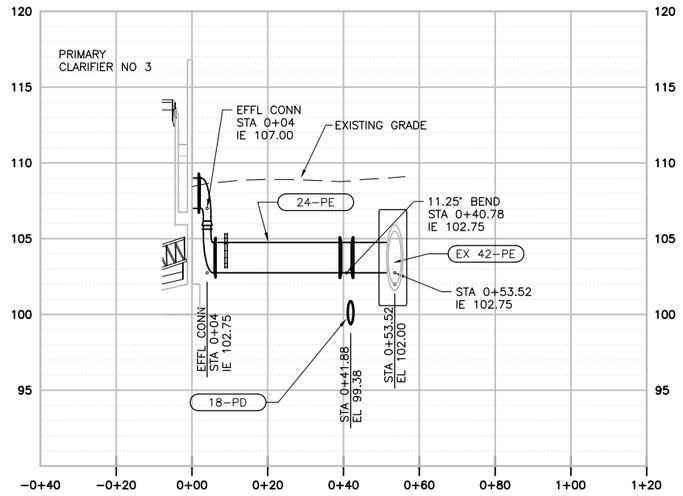

PIPING PROFILE
24" PRIMARY CLARIFIER 3 EFFLUENT (6)
1"=20' HORIZ; 1"=5' VERT

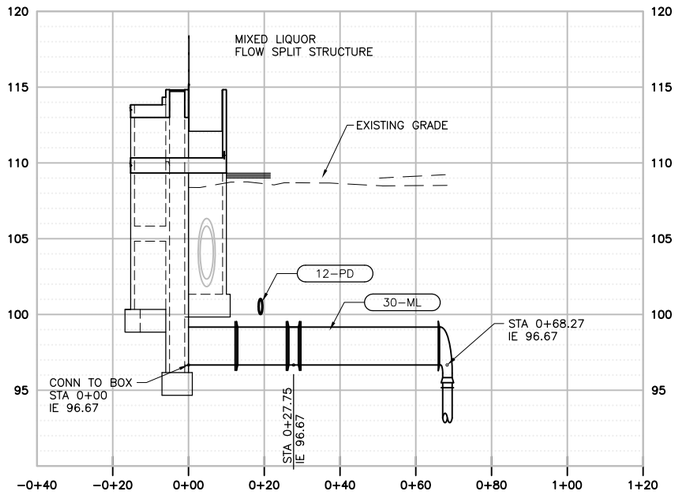

PIPING PROFILE
30" SECONDARY CLAR 1 INFLUENT (7)
1"=20' HORIZ; 1"=5' VERT

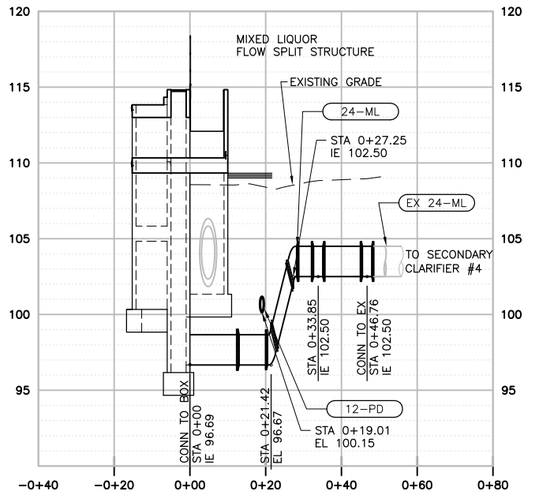

PIPING PROFILE
24" SECONDARY CLAR 4 INFLUENT (8)
1"=20' HORIZ; 1"=5' VERT

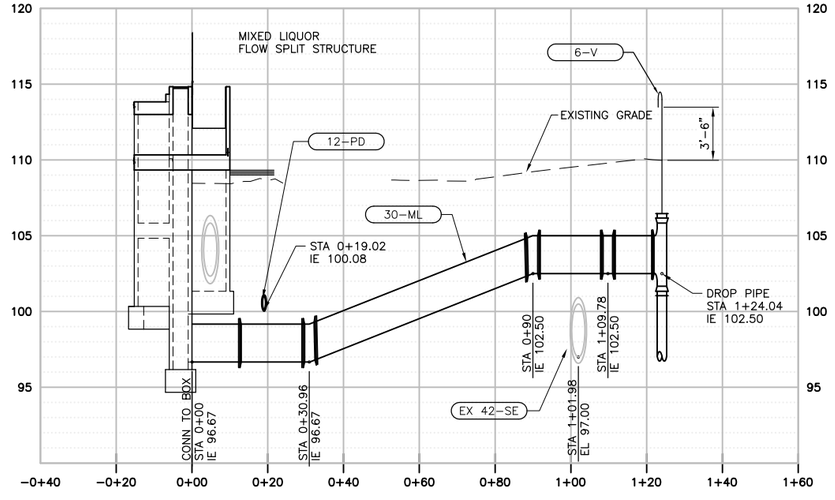

PIPING PROFILE
30" SECONDARY CLAR 2 INFLUENT (9)
1"=20' HORIZ; 1"=5' VERT

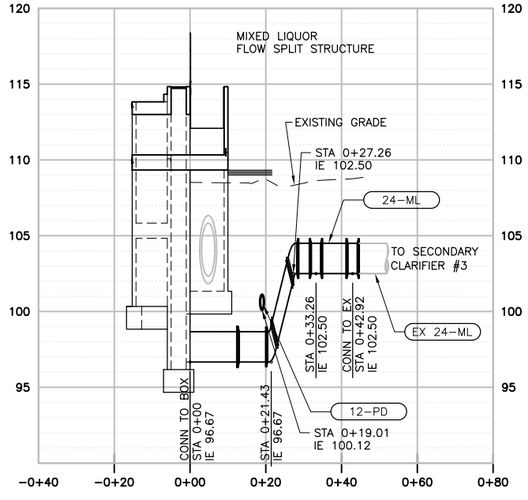

PIPING PROFILE
24" SECONDARY CLAR 3 INFLUENT (10)
1"=20' HORIZ; 1"=5' VERT

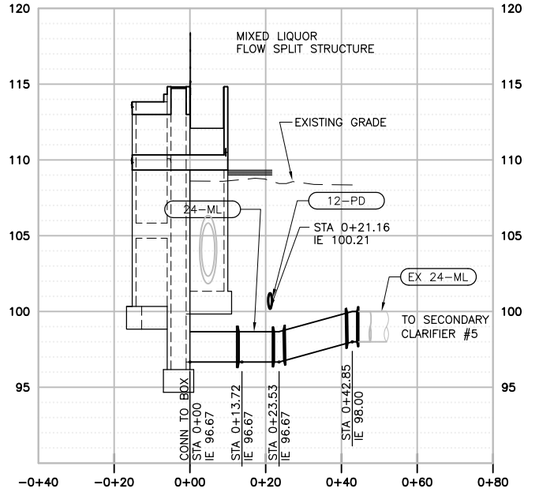

PIPING PROFILE
24" SECONDARY CLAR 5 INFLUENT (11)
1"=20' HORIZ; 1"=5' VERT

NOTE:
YARD PIPING PLANS DEPICT EXISTING AND PROPOSED GRAVITY PROCESS AND PLANT DRAIN PIPES. NOT ALL EXISTING AND PROPOSED PIPES AND UTILITIES ARE SHOWN ON YARD PIPING PROFILES. CONTRACTOR TO LOCATE ALL EXISTING PIPES AND UTILITIES PRIOR TO CONSTRUCTION.

FILE: 215786-03C108.dwg
DATE: Oct 06, 2015-3:15:23pm, rsnider

HDR Engineering, Inc.

ISSUE	DATE	DESCRIPTION
A	JUNE 2015	ISSUED FOR BID

PROJECT MANAGER	C. OLSON
DESIGNED	M. PERINPANAYAGAM
DESIGNED	
CHECKED	C. OLSON
DRAWN	P. VAN MEURS
DATE	JUNE 30, 2015
PROJECT NUMBER	215786

REGISTERED PROFESSIONAL ENGINEER
CRAIG A. OLSON
NO. 39819
EXP. 12/31/15
CIVIL
STATE OF CALIFORNIA
06-30-15

CITY OF PINOLE CALIFORNIA 1903

PINOLE/HERCULES
WATER POLLUTION
CONTROL PLANT UPGRADE
CLIENT PN

CIVIL

YARD PIPING - PROFILES 2

0 1" 2"

FILENAME	215786-03C108
SCALE	AS NOTED

SHEET
03C108

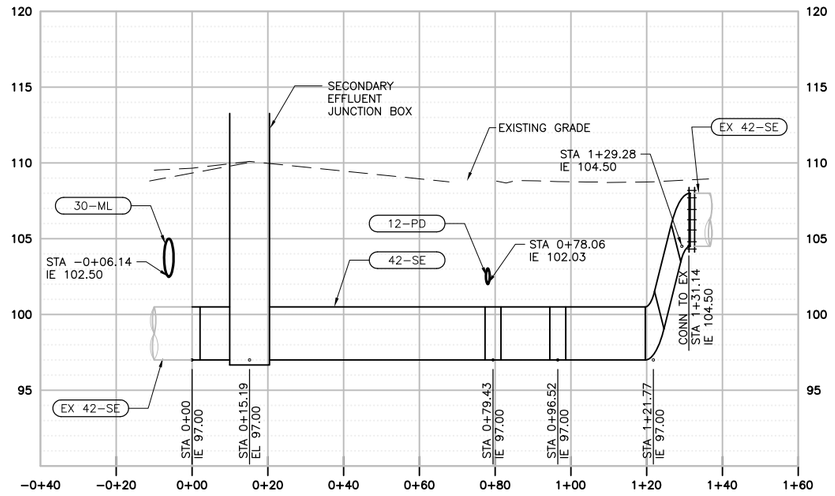

PIPING PROFILE
42" COMBINED SEC CLAR EFFLUENT

12

1"=20' HORIZ; 1"=5' VERT

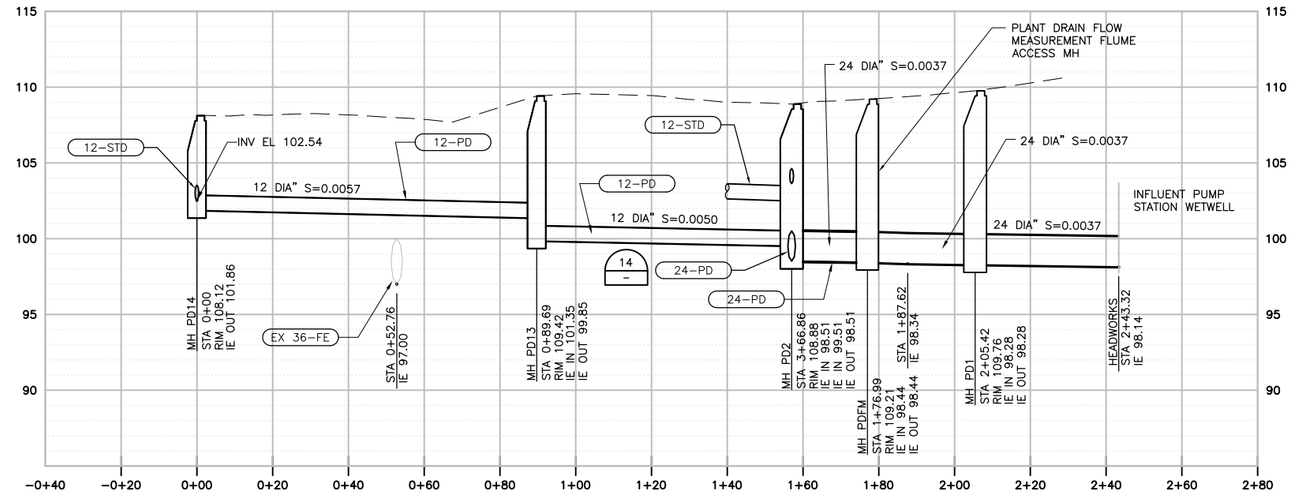

PIPING PROFILE
18"/24" PLANT DRAIN 01

14

1"=20' HORIZ; 1"=5' VERT

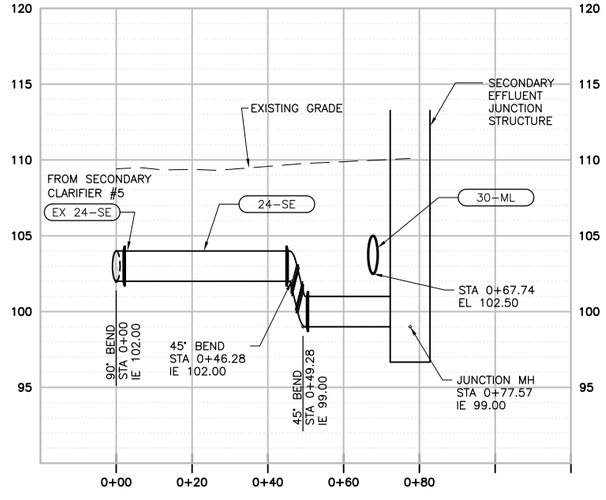

PIPING PROFILE
24" SECONDARY CLAR 5 EFFLUENT

13

1"=20' HORIZ; 1"=5' VERT

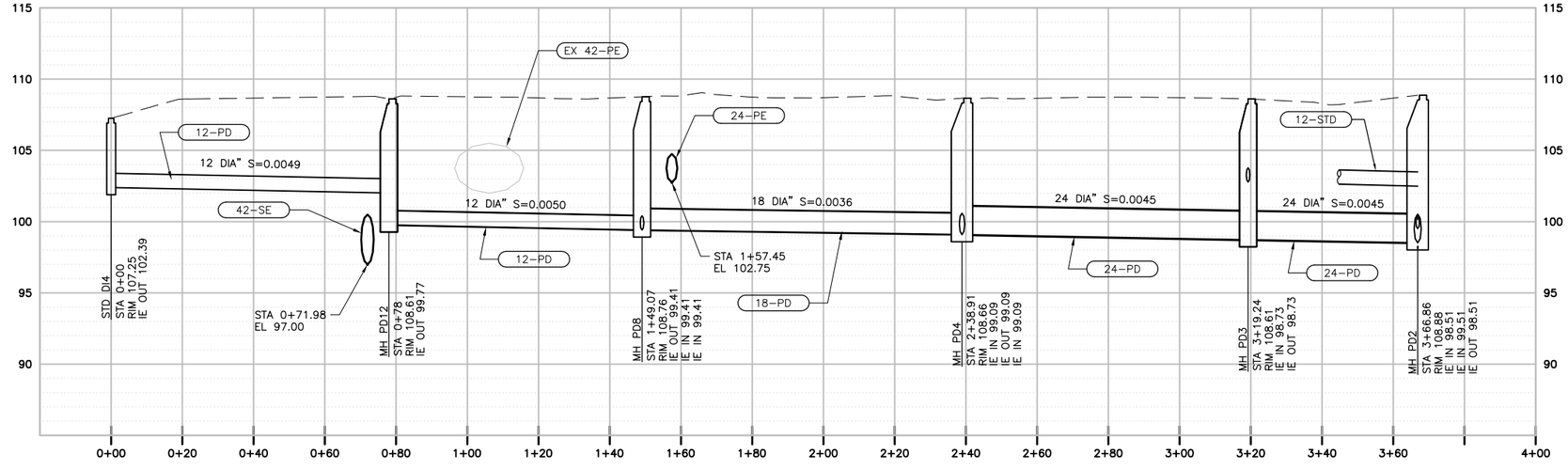

PIPING PROFILE
12"/21" PLANT DRAIN 02

15

1"=20' HORIZ; 1"=5' VERT

NOTE:
YARD PIPING PLANS DEPICT EXISTING AND PROPOSED GRAVITY PROCESS AND PLANT DRAIN PIPES. NOT ALL EXISTING AND PROPOSED PIPES AND UTILITIES ARE SHOWN ON YARD PIPING PROFILES. CONTRACTOR TO LOCATE ALL EXISTING PIPES AND UTILITIES PRIOR TO CONSTRUCTION.

FILE: 215786-03C109.dwg
DATE: Oct 06, 2015-3:15:49pm, rsnider

HDR Engineering, Inc.

ISSUE	DATE	DESCRIPTION
A	JUNE 2015	ISSUED FOR BID

PROJECT MANAGER	C. OLSON
DESIGNED	M. PERINPANAYAGAM
DESIGNED	
CHECKED	C. OLSON
DRAWN	P. VAN MEURS
DATE	JUNE 30, 2015
PROJECT NUMBER	215786

REGISTERED PROFESSIONAL ENGINEER
CRAIG A. OLSON
NO. 39819
EXP. 12/31/15
CIVIL
STATE OF CALIFORNIA
06-30-15

CITY OF PINOLE CALIFORNIA 1903

PINOLE/HERCULES
WATER POLLUTION
CONTROL PLANT UPGRADE
CLIENT PN

CIVIL

YARD PIPING - PROFILES 3

0 1" 2"

FILENAME	215786-03C109
SCALE	AS NOTED

SHEET
03C109

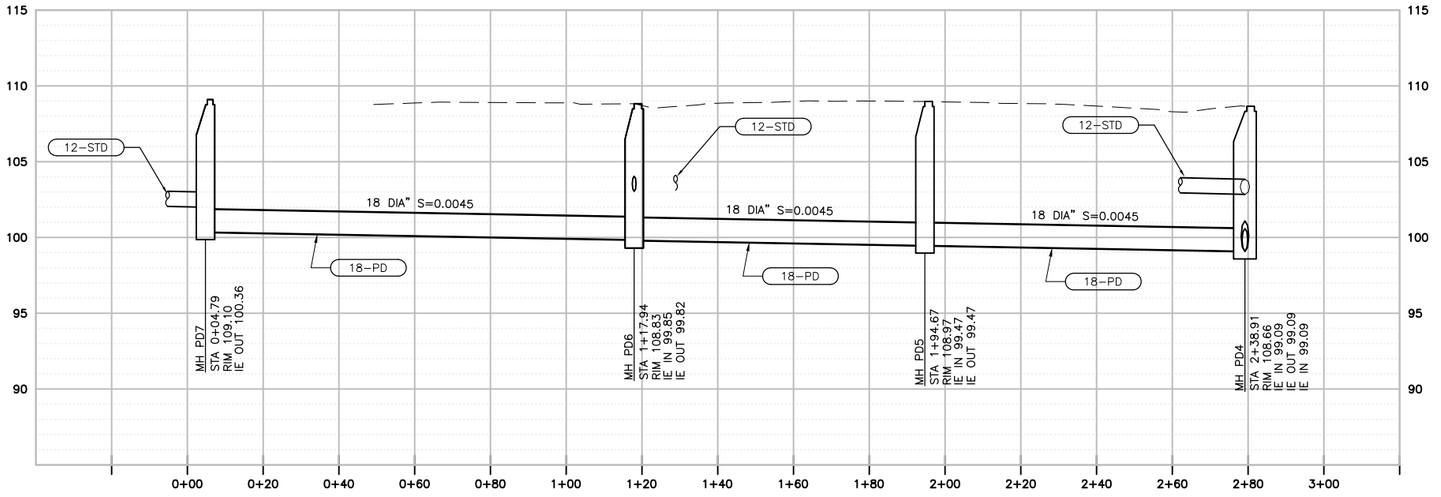

PIPING PROFILE
18" PLANT DRAIN 03 — 16

1"=20' HORIZ; 1"=5' VERT

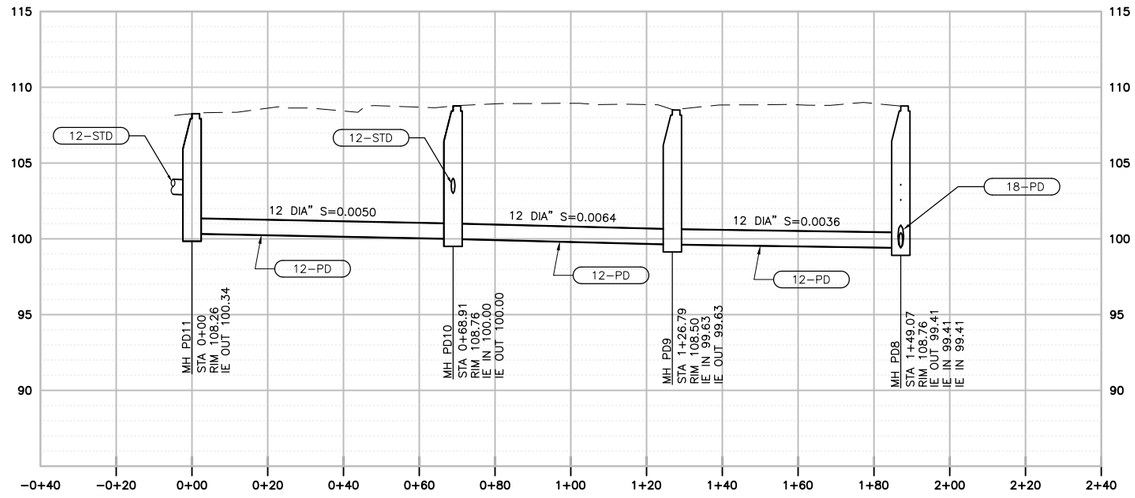

PIPING PROFILE
12" PLANT DRAIN 04 — 17

1"=20' HORIZ; 1"=5' VERT

NOTE:
YARD PIPING PLANS DEPICT EXISTING AND PROPOSED GRAVITY PROCESS AND PLANT DRAIN PIPES. NOT ALL EXISTING AND PROPOSED PIPES AND UTILITIES ARE SHOWN ON YARD PIPING PROFILES. CONTRACTOR TO LOCATE ALL EXISTING PIPES AND UTILITIES PRIOR TO CONSTRUCTION.

FILE: 215786-03C110.dwg
DATE: Oct 06, 2015-3:16:06pm, rsnider

HDR Engineering, Inc.

ISSUE	DATE	DESCRIPTION
A	JUNE 2015	ISSUED FOR BID

PROJECT MANAGER	C. OLSON
DESIGNED	M. PERINPANAYAGAM
DESIGNED	
CHECKED	C. OLSON
DRAWN	P. VAN MEURS
DATE	JUNE 30, 2015
PROJECT NUMBER	215786

REGISTERED PROFESSIONAL ENGINEER
CRAIG A. OLSON
NO. 39819
EXP. 12/31/15
CIVIL
STATE OF CALIFORNIA
06-30-15

CITY OF PINOLE CALIFORNIA 1903

PINOLE/HERCULES
WATER POLLUTION
CONTROL PLANT UPGRADE
CLIENT PN

CIVIL

YARD PIPING - PROFILES 4

0 1" 2"

FILENAME	215786-03C110
SCALE	AS NOTED

SHEET
03C110

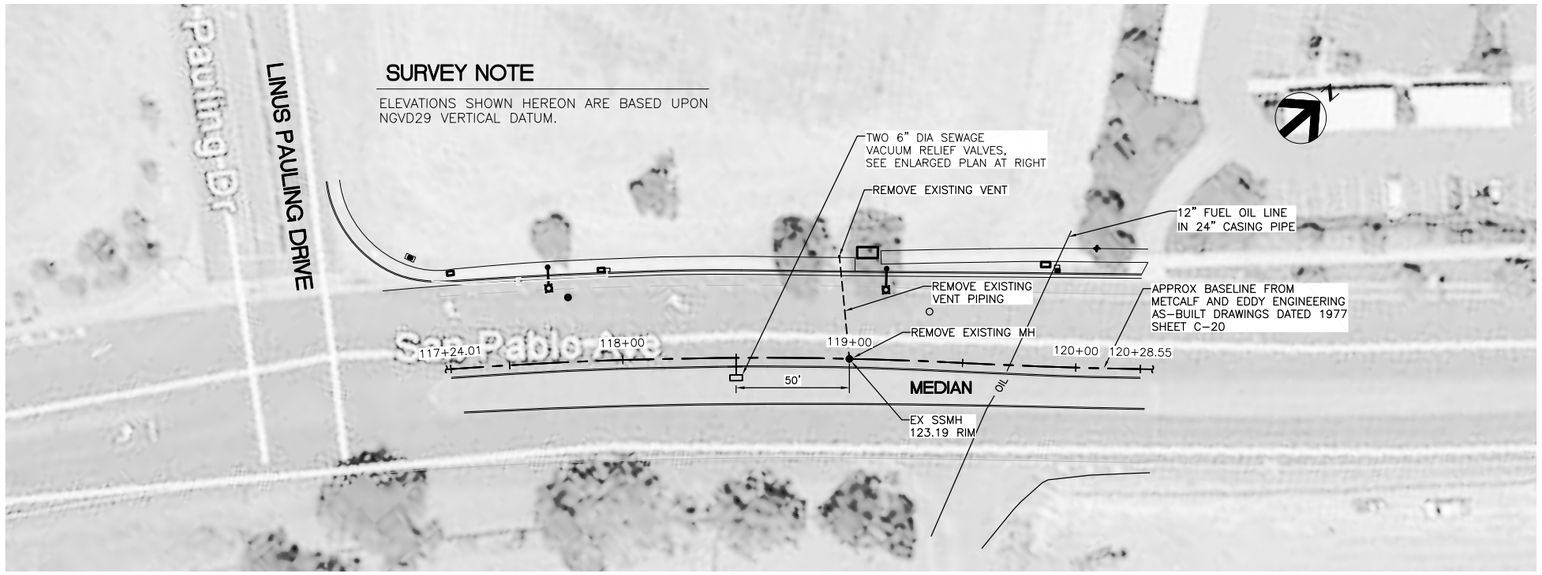

PLAN
SCALE: 1"=30'

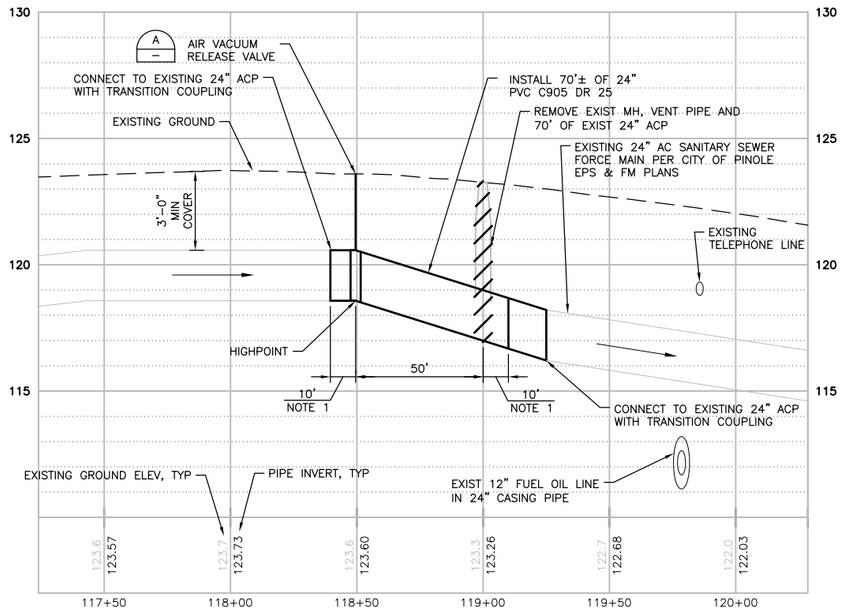

PROFILE
SCALE: HORIZ: 1"=30'
VERT: 1"=3'

NOTES:

1. DECONSTRUCT EXISTING 24" FE AC PIPE TO NEAREST JOINT AND INSTALL TRANSITION COUPLING.
2. CONTRACTOR IS RESPONSIBLE FOR PROVIDING SAFE WORKING CONDITIONS AROUND AC PIPE AND PROPER DISPOSAL OF REMOVED PIPE.

NOTES:

1. PAD DIMENSIONS SHALL ALLOW FOR ANCHORAGE OF ENCLOSURE, MINIMUM OF 6" CLEARANCE AROUND PERIMETER OF ENCLOSURE.
2. REFER TO PIPELINE PROFILE FOR GRADE AND INVERT ELEVATIONS.
3. MEDIAN IS STAMPED CONCRETE OF UNKNOWN THICKNESS. CONTRACTOR TO MATCH THICKNESS, PATTERN AND COLOR OF EXISTING CONCRETE WHEN REPLACING DAMAGED AND TRENCHED AREAS.

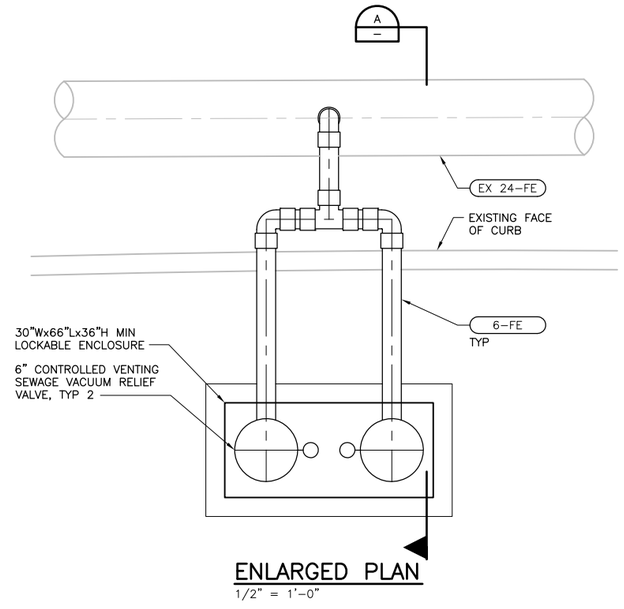

ENLARGED PLAN
1/2" = 1'-0"

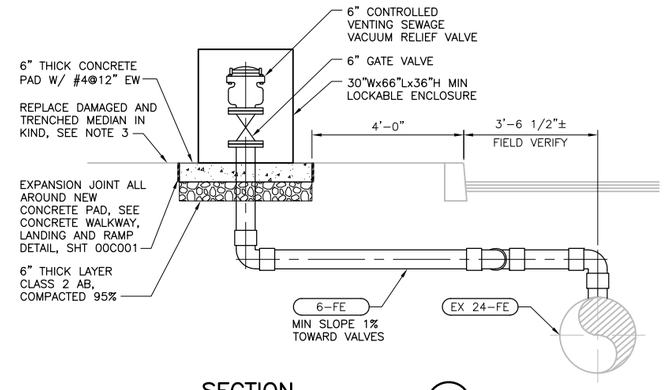

SECTION
1/2" = 1'-0"

FILE: 06C101.dwg
DATE: Oct 06, 2015 - 3:17:17pm, rsnider

HDR Engineering, Inc.

ISSUE	DATE	DESCRIPTION
A	JUNE 2015	ISSUED FOR BID

PROJECT MANAGER	C. OLSON
DESIGNED	M. PERINPANAYAGAM
DESIGNED	
CHECKED	C. OLSON
DRAWN	A. COLLINS
DATE	JUNE 30, 2015
PROJECT NUMBER	215786

REGISTERED PROFESSIONAL ENGINEER
CRAIG A. OLSON
NO. 39819
EXP. 12/31/15
CIVIL
STATE OF CALIFORNIA
06-30-15

CITY OF PINOLE CALIFORNIA 1903

PINOLE/HERCULES
WATER POLLUTION
CONTROL PLANT UPGRADE
CLIENT PN

CIVIL

OUTFALL PIPELINE MODIFIFCATIONS

0 1" 2"

FILENAME	06C101
SCALE	AS NOTED

SHEET
06C101

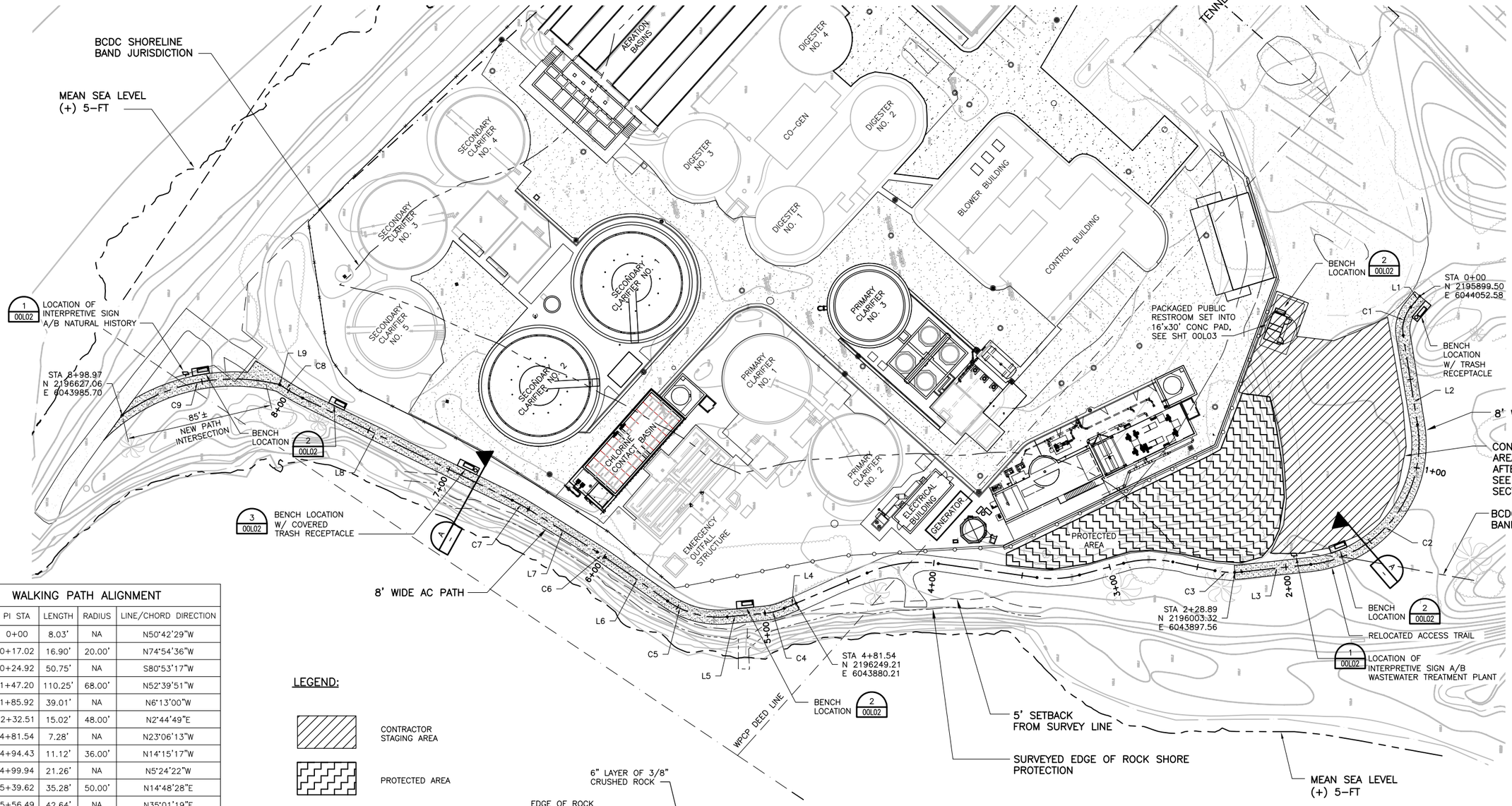

WALKING PATH ALIGNMENT				
NUMBER	PI STA	LENGTH	RADIUS	LINE/CHORD DIRECTION
L1	0+00	8.03'	NA	N50°42'29"W
C1	0+17.02	16.90'	20.00'	N74°54'36"W
L2	0+24.92	50.75'	NA	S80°53'17"W
C2	1+47.20	110.25'	68.00'	N52°39'51"W
L3	1+85.92	39.01'	NA	N6°13'00"W
C3	2+32.51	15.02'	48.00'	N2°44'49"E
L4	4+81.54	7.28'	NA	N23°06'13"W
C4	4+94.43	11.12'	36.00'	N14°15'17"W
L5	4+99.94	21.26'	NA	N5°24'22"W
C5	5+39.62	35.28'	50.00'	N14°48'28"E
L6	5+56.49	42.64'	NA	N35°01'19"E
C6	6+01.84	5.44'	100.00'	N33°27'44"E
L7	6+04.57	45.57'	NA	N31°54'10"E
C7	6+55.30	10.32'	100.00'	N28°56'50"E
L8	6+60.45	130.67'	NA	N25°59'31"E
C8	7+98.48	14.69'	100.00'	N30°12'02"E
L9	8+05.81	0.40'	NA	N34°24'33"E
C9	8+59.05	98.14'	106.75'	N12°27'22"W

LEGEND:

- CONTRACTOR STAGING AREA
- PROTECTED AREA
- NEW AC PATH
- SURVEYED EDGE OF ROCK SHORE PROTECTION
- 5' SETBACK FROM SURVEY LINE

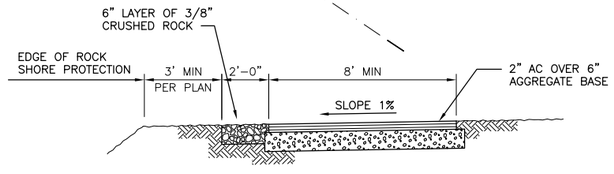

TYPICAL PATH SECTION (A)
NO SCALE

NOTES:

1. PATH GRADES TO BE DETERMINED IN THE FIELD AT THE TIME OF CONSTRUCTION.
2. SAWCUT EXISTING AC PATH AT JOIN LINES.

FILE: 215786_00L001.dwg
DATE: Oct 06, 2015 - 2:59:07pm, rsnider

wra ENVIRONMENTAL CONSULTANTS

HDR Engineering, Inc.

ISSUE	DATE	DESCRIPTION
A	JUNE 2015	ISSUED FOR BID

PROJECT MANAGER	C. OLSON
DESIGNED	C. OLSON
DESIGNED	R. NATOLI
CHECKED	C. OLSON
DRAWN	P. VAN MEURS
DATE	JUNE 30, 2015
PROJECT NUMBER	215786

REGISTERED PROFESSIONAL ENGINEER CRAIG A. OLSON NO. 39819 EXP. 12/31/15 CIVIL STATE OF CALIFORNIA 06-30-15

CITY OF PINOLE CALIFORNIA 1903

PINOLE/HERCULES WATER POLLUTION CONTROL PLANT UPGRADE CLIENT PN

LANDSCAPE

SITE PLAN WALKING PATH LAYOUT

0 1" 2"

FILENAME	215786_00L001
SCALE	NONE

SHEET 00L001

Parc Vue® Backed Bench, 72in, Surface Mount, with End Arms
Product Drawing
www.landscapeforms.com
Date: 5/19/2010
Ph: 800.521.2546

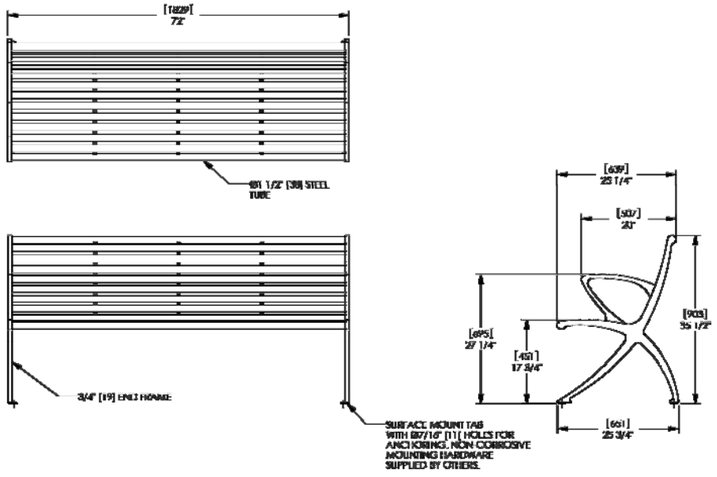

landscapeforms
Drawing: P4048-01
Dimensions are in inches [mm]
U.S. Patent Nos. D397,882; D434,921; D598,681

CONFIDENTIAL DRAWING INFORMATION CONTAINED HEREIN IS THE PROPERTY OF LANDSCAPE FORMS, INC. INTENDED USE IS LIMITED TO DESIGN PROFESSIONALS SPECIFYING LANDSCAPE FORMS, INC. PRODUCTS AND THEIR USE IN PROJECTS. DRAWING IS NOT TO BE COPIED OR USED, EXCEPTAS EXPRESSLY DIRECTED BY THE CONSENT OF LANDSCAPE FORMS, INC. ©2010 LANDSCAPE FORMS, INC. ALL RIGHTS RESERVED.

4 BENCH
NOT TO SCALE

NOTES:
1. CONCRETE FOOTINGS SHALL HAVE A SMOOTH AND LEVEL TOP SURFACE TO CREATE A LEVEL DISPLAY.
2. UNFINISHED METAL PARTS SHALL BE PAINTED WITH A PRIMER AND BLACK FINISH COAT.
3. CONCRETE FOOTING SIZE SHALL BE PER MANUFACTURER'S RECOMMENDATIONS.

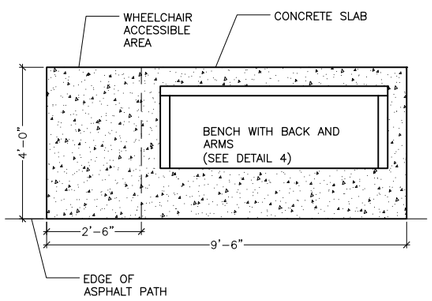

2 ACCESSIBLE BENCH INSTALLATION (TYP)
SCALE: 1" = 1'

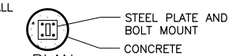

PLAN

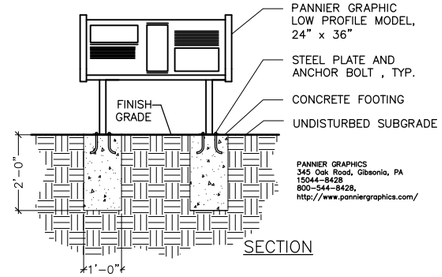

SECTION

1 INTERPRETIVE PANEL INSTALLATION
NOT TO SCALE

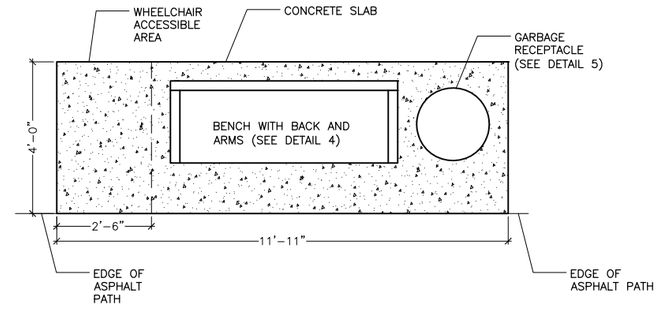

3 ACCESSIBLE BENCH AND GARBAGE RECEPTACLE INSTALLATION (TYP)
SCALE: 1/2" = 1'

Parc Vue® Liter Receptacle, Side Opening, With Un-Shaped Liner
Product Drawing
www.landscapeforms.com
Date: 7/23/2010
Ph: 800.521.2546

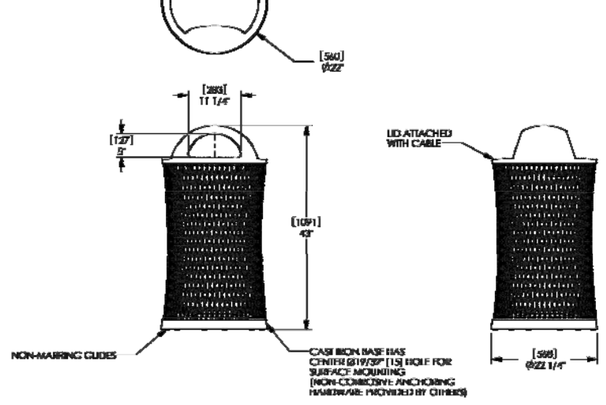

landscapeforms
Drawing: P4041-01
Dimensions are in inches [mm]
U.S. Patent Nos. D550,421; D598,618

CONFIDENTIAL DRAWING INFORMATION CONTAINED HEREIN IS THE PROPERTY OF LANDSCAPE FORMS, INC. INTENDED USE IS LIMITED TO DESIGN PROFESSIONALS SPECIFYING LANDSCAPE FORMS, INC. PRODUCTS AND THEIR USE IN PROJECTS. DRAWING IS NOT TO BE COPIED OR USED, EXCEPT AS EXPRESSLY DIRECTED BY THE CONSENT OF LANDSCAPE FORMS, INC. ©2010 LANDSCAPE FORMS, INC. ALL RIGHTS RESERVED.

5 TRASH RECEPTACLE
NOT TO SCALE

FILE: 215786-00L002.dwg
DATE: Oct 06, 2015 - 3:03:10pm, rsnider

wra ENVIRONMENTAL CONSULTANTS

HDR
HDR Engineering, Inc.

ISSUE	DATE	DESCRIPTION
A	JUNE-2015	ISSUED FOR BID

PROJECT MANAGER	C. OLSON
DESIGNED	J. SEMION
DESIGNED	C. SHERRADEN
CHECKED	C. OLSON
DRAWN	P. VAN MEURS
DATE	JUNE 30, 2015
PROJECT NUMBER	215786

REGISTERED PROFESSIONAL ENGINEER
CRAIG A. OLSON
NO. 39819
EXP. 12/31/15
CIVIL
STATE OF CALIFORNIA
06-30-15

CITY OF PINOLE CALIFORNIA 1903

PINOLE/HERCULES
WATER POLLUTION
CONTROL PLANT UPGRADE
CLIENT PN

LANDSCAPE

MISCELLANEOUS DETAILS 1

0 1" 2"

FILENAME	215786-00L002
SCALE	AS NOTED

SHEET
00L002

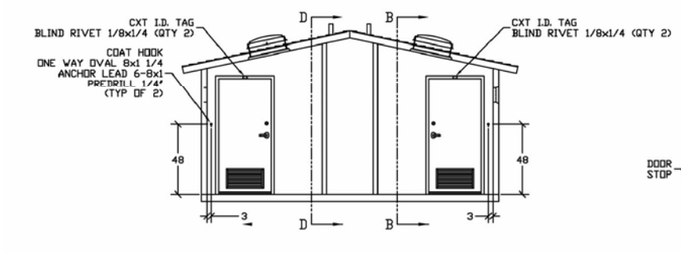

SECTION A – A

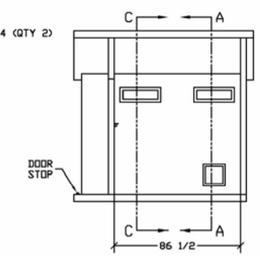

SECTION B – B

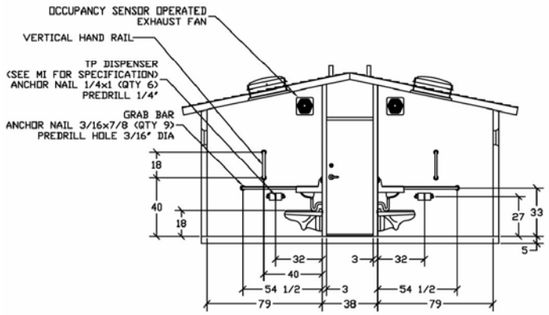

SECTION C – C

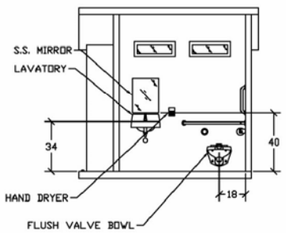

SECTION D – D

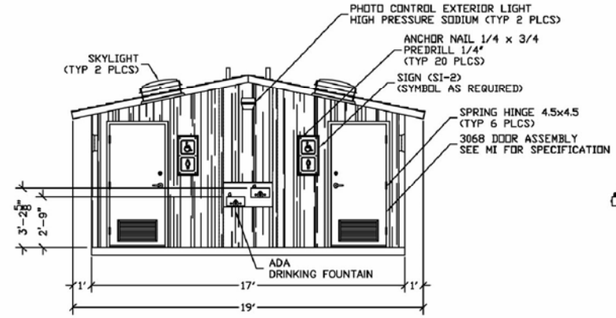

FRONT ELEVATION

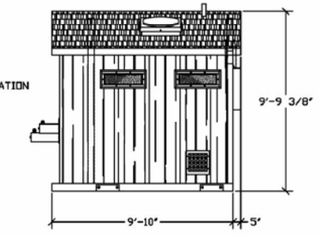

RIGHT SIDE ELEVATION

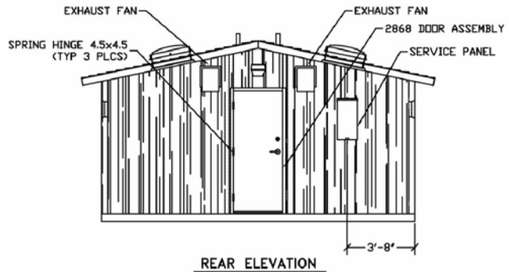

REAR ELEVATION

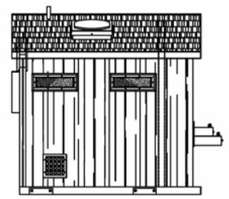

LEFT SIDE ELEVATION

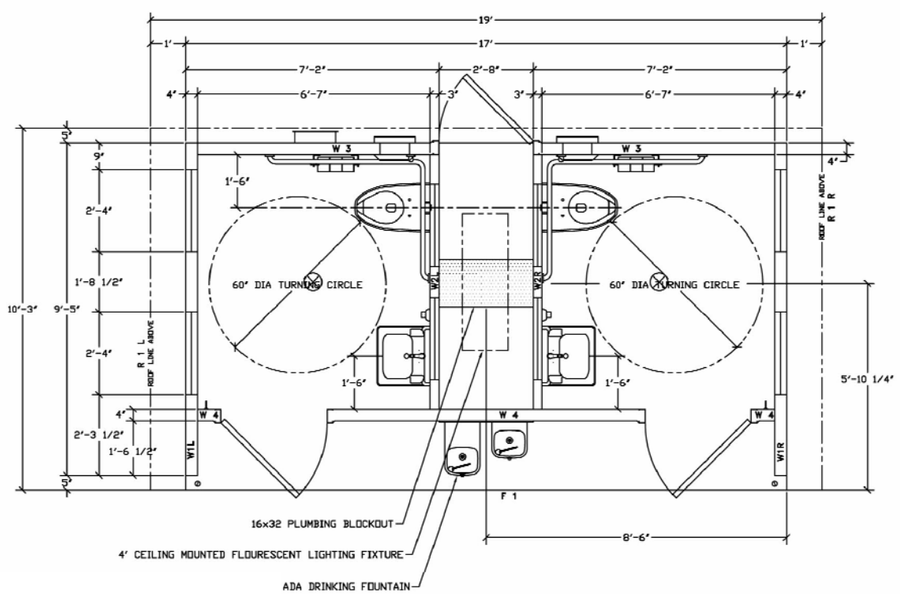

6 PACKAGED RESTROOM
NOT TO SCALE

NOTES:

1. FACILITY TO BE A PACKAGE ADA-COMPLIANT, TWO-OCCUPANT RESTROOM WITH SERVICE CHASE. STANDARD FEATURES TO INCLUDE SIMULATED BARNWOOD TEXTURE WALLS, SIMULATED CEDAR SHAKE TEXTURED ROOF, INTERIOR AND EXTERIOR LIGHTS, OFF LOADED AND SET UP AT SITE INCLUDING ALL UTILITY CONNECTIONS.
2. CONSTRUCTION TO MEET 150 MPH WIND LOAD (WIND EXPOSURE C), 250 POUNDS PER SQUARE FOOT SNOW LOAD, 400 POUNDS PER SQUARE FOOT FLOOR LOAD, AND WITHSTAND THE EFFECTS OF A GROUP 1 SEISMIC DESIGN CATEGORY E EARTHQUAKE.
3. PRE-PLUMBED AND PRE-WIRED BUILDINGS TO MEET ALL REQUIREMENTS OF THE CURRENT CALIFORNIA BUILDING CODE.
4. REQUIRED ITEMS INCLUDE TWO-TONE COLOR SCHEME TO BE SELECTED BY OWNER, STAINLESS STEEL PLUMBING FIXTURES, ELECTRIC HAND DRYERS, EXTERIOR-MOUNTED ADA DRINKING FOUNTAIN, MARINE PACKAGE FOR EXTRA CORROSION RESISTANCE, AND FIBERGLASS ENTRY AND CHASE DOORS AND FRAMES.
5. ADDITIONAL ITEMS AS SHOWN IN PLAN, ELEVATIONS AND SECTIONS ON THIS DRAWING.
6. REQUIREMENTS INCLUDE FINAL UTILITY CONNECTIONS. CONTRACTOR TO COORDINATE REQUIRED UTILITIES.
7. PACKAGE RESTROOM TO BE CXT CONCRETE BUILDINGS, MODEL CORTEZ FLUSH RESTROOM OR APPROVED EQUAL.
8. CONTRACTOR TO PROVIDE 2'-0" THICK LAYER OF COMPACTED (95%) CLASS 2 AGGREGATE BASE UNDER BUILDING FOR FOUNDATION. EXTEND AGGREGATE BASE 2'-0" (MINIMUM) BEYOND BUILDING PERIMETER.

FILE: 215786-00L003.dwg
DATE: Oct 06, 2015-3:20:30pm, renider

wra ENVIRONMENTAL CONSULTANTS

HDR Engineering, Inc.

ISSUE	DATE	DESCRIPTION
A	JUNE 2015	ISSUED FOR BID

PROJECT MANAGER	C. OLSON
DESIGNED	C. OLSON
DESIGNED	R. NATOLI
CHECKED	C. OLSON
DRAWN	P. VAN MEURS
DATE	JUNE 30, 2015
PROJECT NUMBER	215786

REGISTERED PROFESSIONAL ENGINEER
CRAIG A. OLSON
NO. 39819
EXP. 12/31/15
CIVIL
STATE OF CALIFORNIA
06-30-15

CITY OF PINOLE CALIFORNIA 1903

PINOLE/HERCULES
WATER POLLUTION
CONTROL PLANT UPGRADE
CLIENT PN

LANDSCAPE

MISCELLANEOUS DETAILS 2

0 1" 2"

FILENAME	215786-00L003
SCALE	NONE

SHEET
00L003

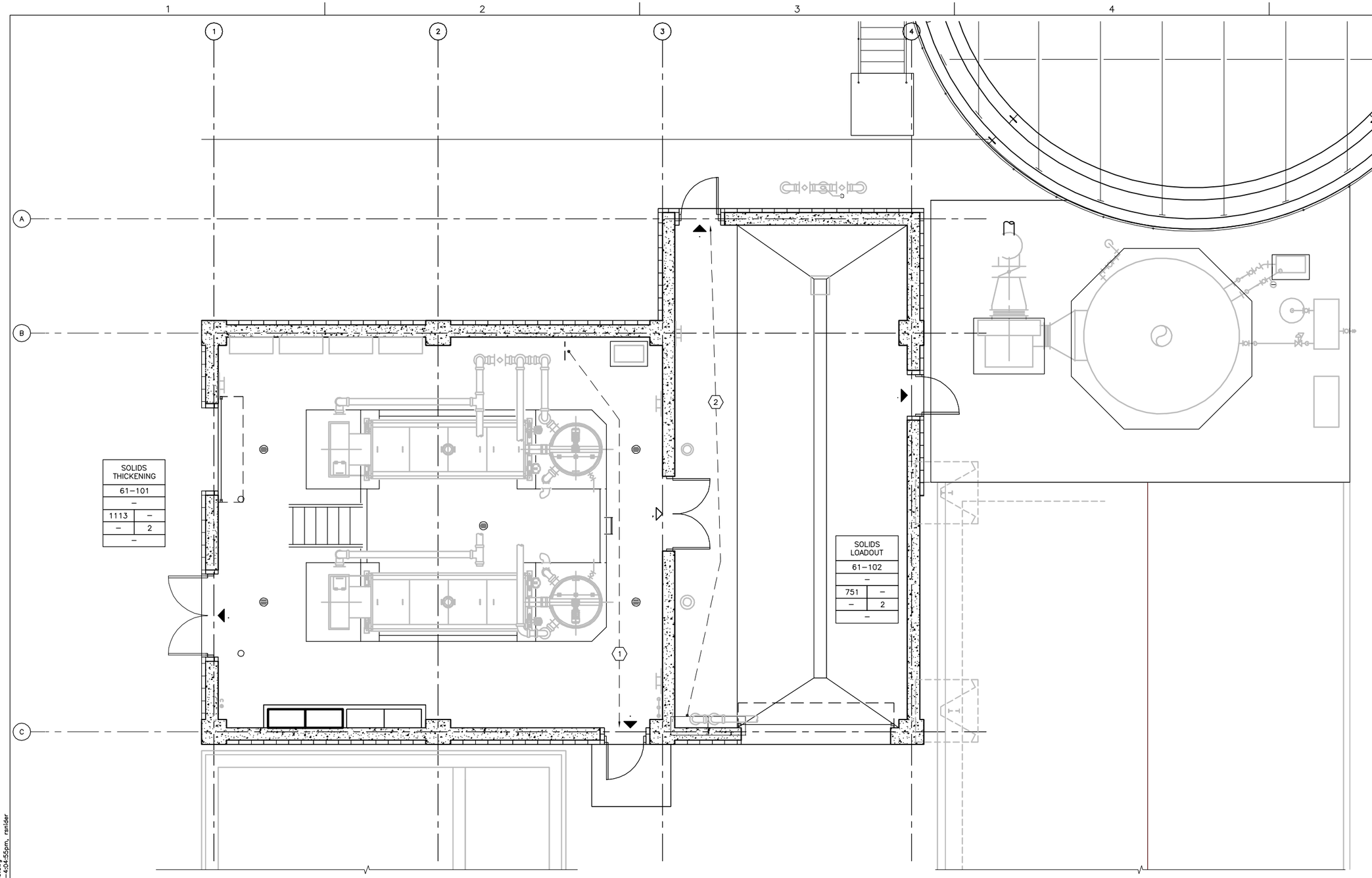

KEY NOTES:

1. PATH OF TRAVEL = 32 FEET.
2. PATH OF TRAVEL = 40 FEET.

SEE SHEET 66A101 FOR CONTINUATION

FLOOR PLAN

1/4" = 1'–0"

FILE: 215786–00A103.dwg
DATE: Oct 06, 2015–4:04:55pm, rsnider

HDR
HDR Engineering, Inc.

ISSUE	DATE	DESCRIPTION
A	JUNE 2015	ISSUED FOR BID

PROJECT MANAGER	C. OLSON
DESIGNED	M. EVERETT
DESIGNED	
CHECKED	
DRAWN	M. MENDOZA
DATE	JUNE 30, 2015
PROJECT NUMBER	215786

REGISTERED PROFESSIONAL ENGINEER
CRAIG A. OLSON
NO. 39819
EXP. 12/31/15
CIVIL
STATE OF CALIFORNIA
06-30-15

CITY OF PINOLE CALIFORNIA 1903

PINOLE/HERCULES
WATER POLLUTION
CONTROL PLANT UPGRADE
CLIENT PN

ARCHITECTURAL
SOLIDS HANDLING BUILDING
CODE REVIEW PLAN
FIRST FLOOR

0 1" 2"

FILENAME	215786–00A103
SCALE	1/4" = 1'–0"

SHEET
00A103

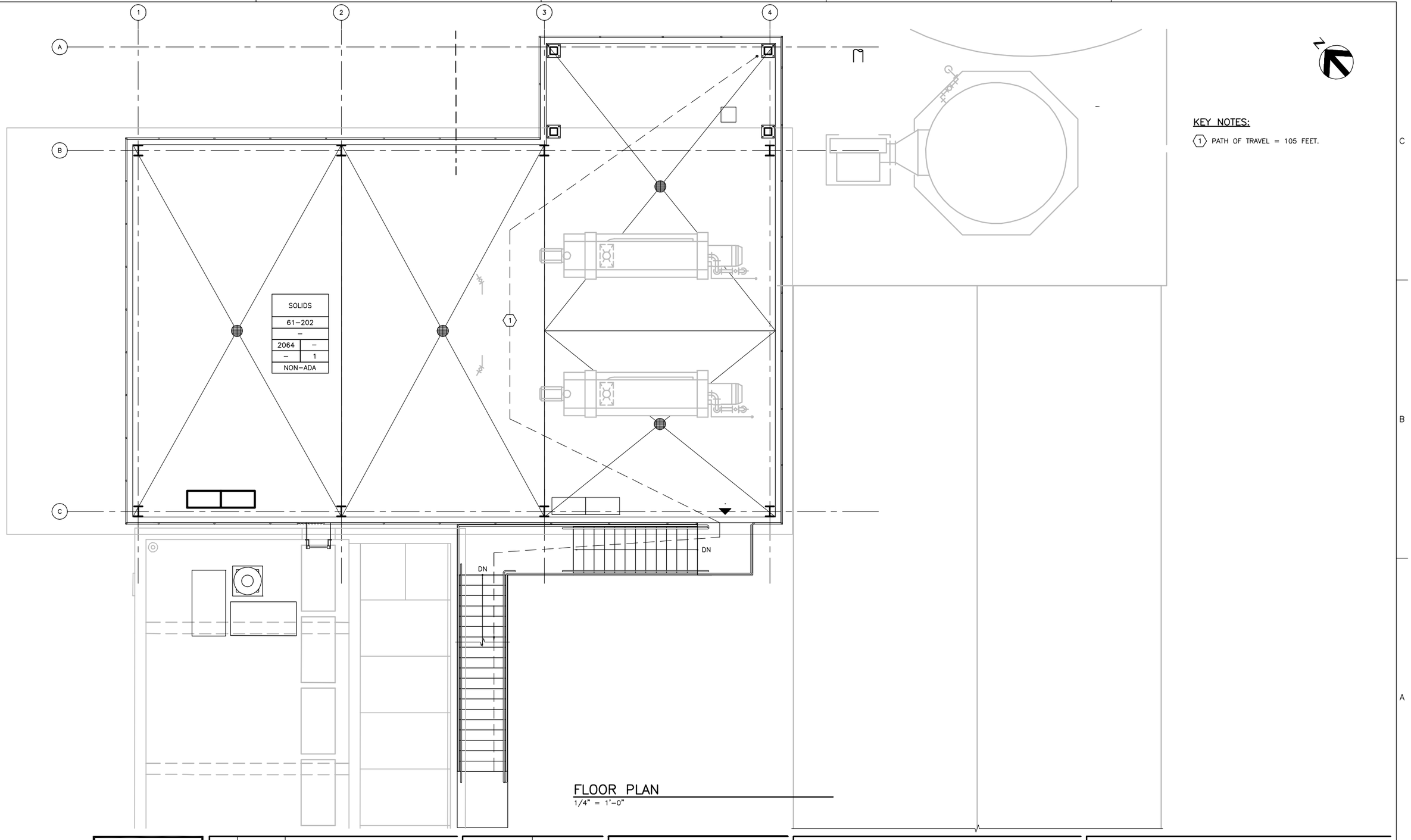

KEY NOTES:

1 PATH OF TRAVEL = 105 FEET.

FLOOR PLAN
1/4" = 1'–0"

FILE: 215786–00A104.dwg
DATE: Oct 06, 2015–4:05:02pm, rsnider

HDR Engineering, Inc.

ISSUE	DATE	DESCRIPTION
A	JUNE 2015	ISSUED FOR BID

PROJECT MANAGER	C. OLSON
DESIGNED	M. EVERETT
DESIGNED	
CHECKED	
DRAWN	M. MENDOZA
DATE	JUNE 30, 2015
PROJECT NUMBER	215786

REGISTERED PROFESSIONAL ENGINEER
CRAIG A. OLSON
NO. 39819
EXP. 12/31/15
CIVIL
STATE OF CALIFORNIA
06-30-15

CITY OF PINOLE CALIFORNIA 1903

PINOLE/HERCULES
WATER POLLUTION
CONTROL PLANT UPGRADE
CLIENT PN

ARCHITECTURAL
SOLIDS HANDLING BUILDING
CODE REVIEW PLAN
SECOND FLOOR

0 1" 2"

FILENAME	215786–00A104
SCALE	1/4" = 1'–0"

SHEET
00A104

DOOR SCHEDULE

DOOR NO.	DOOR TYPE	DOOR SWING	DOOR SIZE			DOOR MATERIALS		FRAME MATERIAL & DETAILS		HARDWARE GROUP	REMARKS
			WIDTH	HEIGHT	THICKNESS	MATERIAL	FINISH	MATERIAL	FINISH		
14–101A	TYPE 2	RHRA	PR 6'–0"	7'–0"	1–3/4"	HM	PAINT	HM	PAINT	SEE SPECIFICATION SECTION 08700	
14–102B	TYPE 1	RHRB	3'–0"	7'–0"	1–3/4"	HM	PAINT	HM	PAINT	SEE SPECIFICATION SECTION 08700	
61–101A	TYPE 5	N/A	8'–0"	10'–0"						SEE SPECIFICATION SECTION 08700	MOTOR OPERATED
61–101B	TYPE 2	RHRA	PR 6'–0"	7'–0"	1–3/4"	HM	PAINT	HM	PAINT	SEE SPECIFICATION SECTION 08700	WITH LOUVERED TRANSOM ABOVE
61–101C	TYPE 1	LHRB	3'–0"	7'–0"	1–3/4"	HM	PAINT	HM	PAINT	SEE SPECIFICATION SECTION 08700	
61–101D	TYPE 2	RHRA	PR 6'–0"	7'–0"	1–3/4"	HM	PAINT	HM	PAINT	SEE SPECIFICATION SECTION 08700	8"X2'–0" LITE IN DOORS
61–102A	TYPE 1	LHRB	3'–0"	7'–0"	1–3/4"	HM	PAINT	HM	PAINT	SEE SPECIFICATION SECTION 08700	
61–102B	TYPE 1	LHRB	3'–0"	7'–0"	1–3/4"	HM	PAINT	HM	PAINT	SEE SPECIFICATION SECTION 08700	
61–102C	TYPE 6	N/A	12'–0"	12'–0"						SEE SPECIFICATION SECTION 08700	MOTOR OPERATED
66–101	TYPE 4	RHRA	PR 5'–8"	10'–0"	1–3/4"	HM	PAINT	HM	PAINT	SEE SPECIFICATION SECTION 08700	WITH 2'X7' LOUVERED AREA

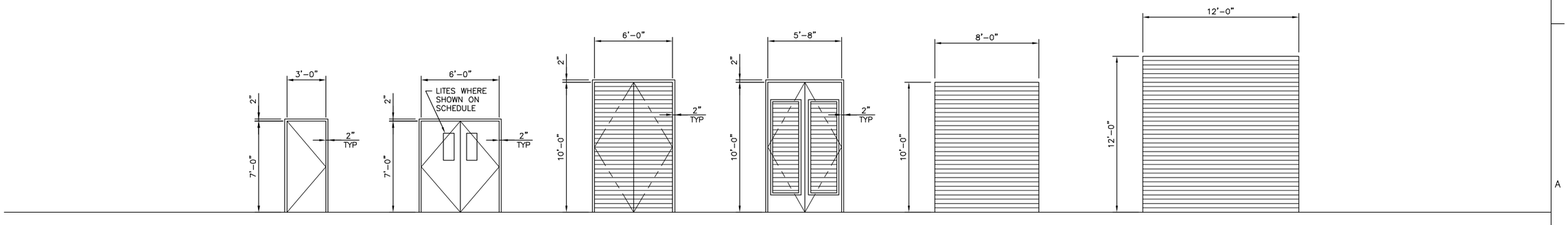

DOOR TYPES

FILE: 215786–00A106.dwg
DATE: Oct 06, 2015–4:05:06pm, rsnider

HDR Engineering, Inc.

ISSUE	DATE	DESCRIPTION
A	JUNE 2015	ISSUED FOR BID

PROJECT MANAGER	C. OLSON
DESIGNED	M. EVERETT
DESIGNED	
CHECKED	C. OLSON
DRAWN	M. MENDOZA
DATE	JUNE 30, 2015
PROJECT NUMBER	215786

REGISTERED PROFESSIONAL ENGINEER
CRAIG A. OLSON
NO. 39819
EXP. 12/31/15
CIVIL
STATE OF CALIFORNIA
04-30-15

CITY OF PINOLE CALIFORNIA 1903

PINOLE/HERCULES
WATER POLLUTION
CONTROL PLANT UPGRADE
CLIENT PN

ARCHITECTURAL

DOOR AND LOUVER SCHEDULE

0 1" 2"

FILENAME	215786–00A106
SCALE	NTS

SHEET **00A106**

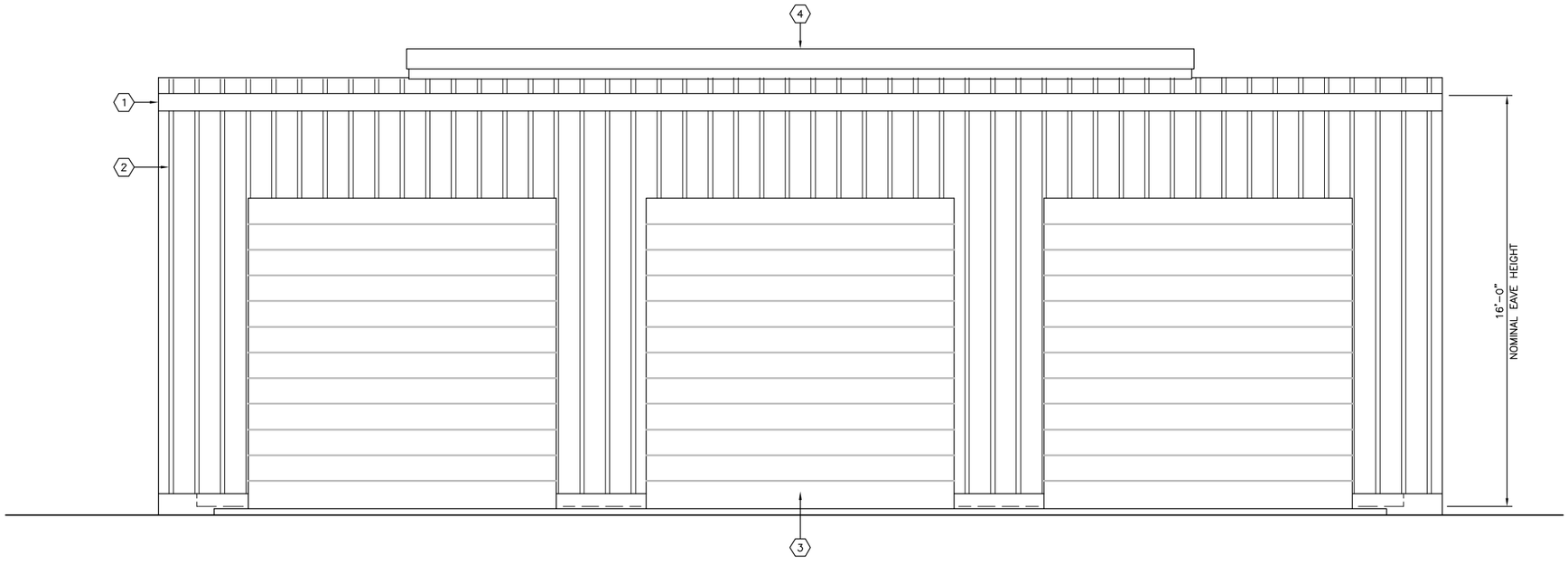

NORTH BUILDING ELEVATION

3/8" = 1'-0" (SOUTH ELEVATION SIMILAR, NO DOORS)

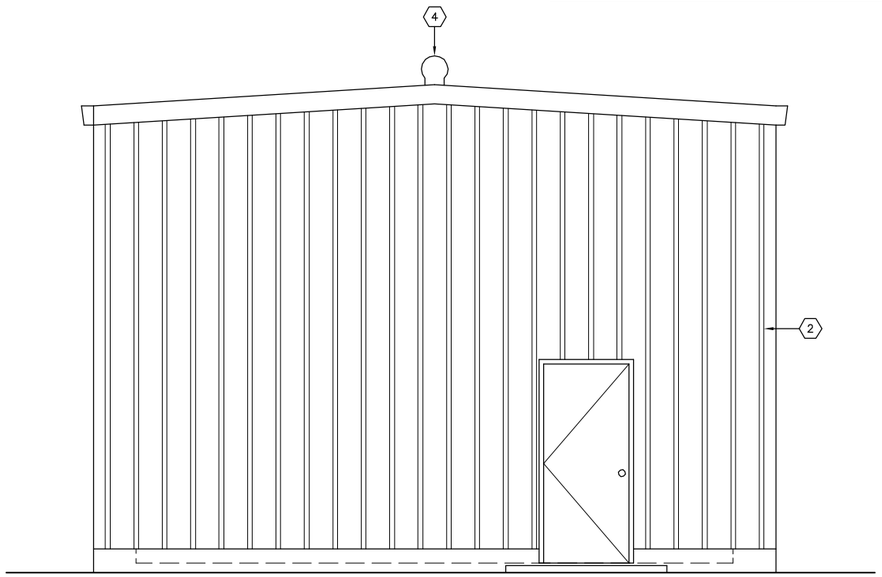

EAST BUILDING ELEVATION

3/8" = 1'-0" (WEST ELEVATION SIMILAR, BUT MIRRORED)

KEY NOTES:

1. FASCIA STYLE RAIN GUTTER ALONG EAVE LINE, TYP.
2. CORRUGATED SIDING WITH FACTORY FINISH.
3. ROLL-UP DOOR 12' x 12', TYP OF 3.
4. RIDGE VENT.
5. 36" MAN DOOR.

FILE: 215786-01A101.dwg
DATE: Oct 06, 2015-4:05:11pm, rsnider

HDR Engineering, Inc.

ISSUE	DATE	DESCRIPTION
A	JUNE 2015	ISSUED FOR BID

PROJECT MANAGER	C. OLSON
DESIGNED	M. EVERETT
DESIGNED	
CHECKED	
DRAWN	P. VAN MEURS
DATE	JUNE 30, 2015
PROJECT NUMBER	215786

REGISTERED PROFESSIONAL ENGINEER
CRAIG A. OLSON
NO. 39819
EXP. 12/31/15
CIVIL
STATE OF CALIFORNIA
06-30-15

CITY OF PINOLE CALIFORNIA 1903

PINOLE/HERCULES
WATER POLLUTION
CONTROL PLANT UPGRADE
CLIENT PN

ARCHITECTURAL

PUBLIC WORKS BUILDING ELEVATIONS

0 1" 2"

FILENAME	215786-01A101
SCALE	NTS

SHEET **01A101**

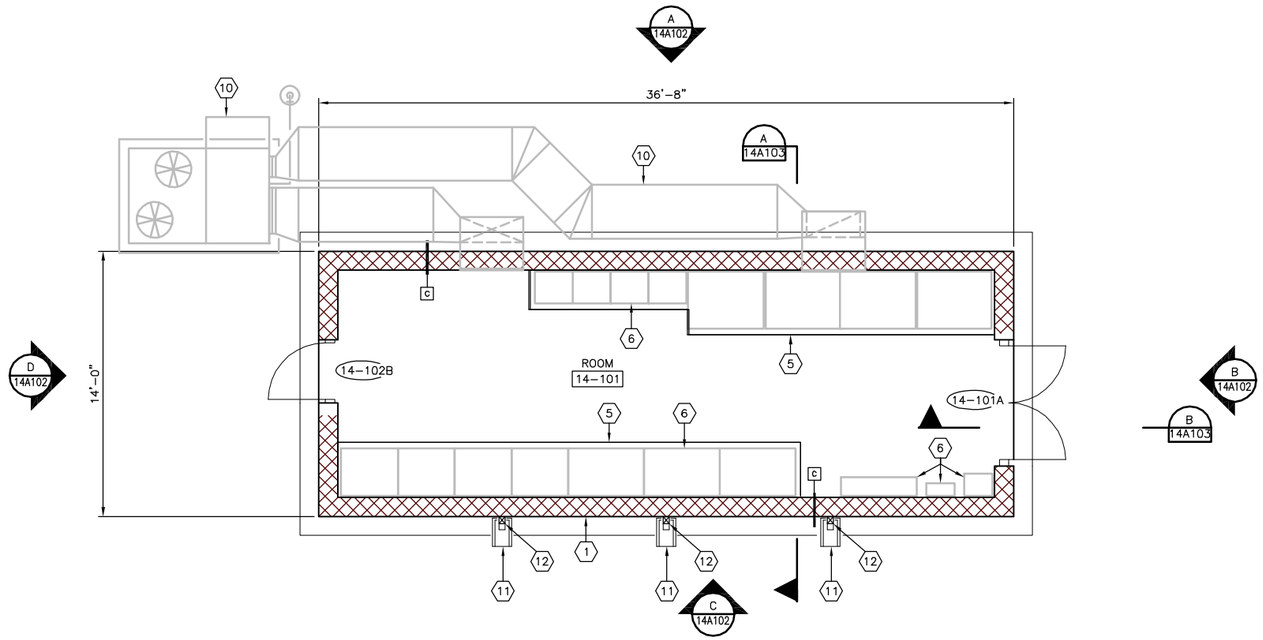

FLOOR PLAN
1/4" = 1'-0"

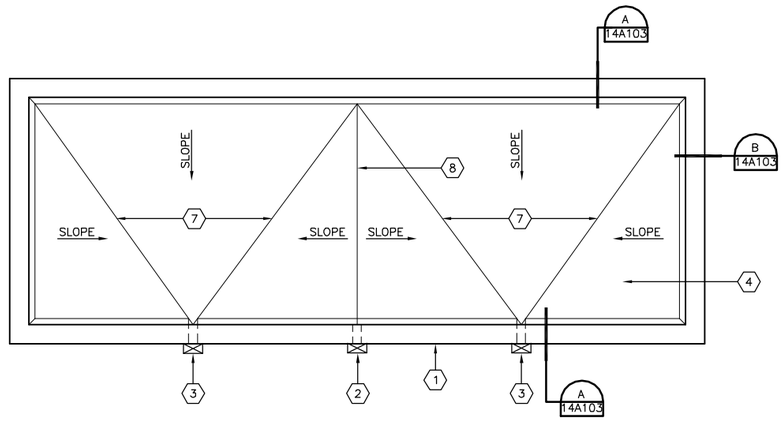

ROOF PLAN
1/4" = 1'-0"

KEY NOTES:

1. CMU WALL.
2. OVERFLOW SCUPPER.
3. SCUPPER.
4. MEMBRANE ROOFING SYSTEM.
5. HOUSEKEEPING PAD.
6. ELECTRICAL EQUIPMENT. SEE ELECTRICAL DRAWINGS.
7. VALLEY LINE.
8. RIDGE LINE.
9. NOT USED.
10. MECHANICAL EQUIPMENT. SEE MECHANICAL DRAWINGS.
11. SPLASH BLOCK.
12. DOWNSPOUT.

FILE: 215786-14A101.dwg
DATE: Oct 06, 2015-4:05:16pm, rsnider

HDR Engineering, Inc.

ISSUE	DATE	DESCRIPTION
A	JUNE 2015	ISSUED FOR BID

PROJECT MANAGER	C. OLSON
DESIGNED	C. OLSON
DESIGNED	M. EVERETT
CHECKED	
DRAWN	M. MENDOZA
DATE	JUNE 30, 2015
PROJECT NUMBER	215786

REGISTERED PROFESSIONAL ENGINEER
CRAIG A. OLSON
NO. 39819
EXP. 12/31/15
CIVIL
STATE OF CALIFORNIA

PINOLE/HERCULES
WATER POLLUTION
CONTROL PLANT UPGRADE
CLIENT PN

ARCHITECTURAL

ELECTRICAL BUILDING FLOOR AND ROOF PLAN

0 1" 2"

FILENAME	215786-14A101
SCALE	1/4" = 1'-0"

SHEET
14A101

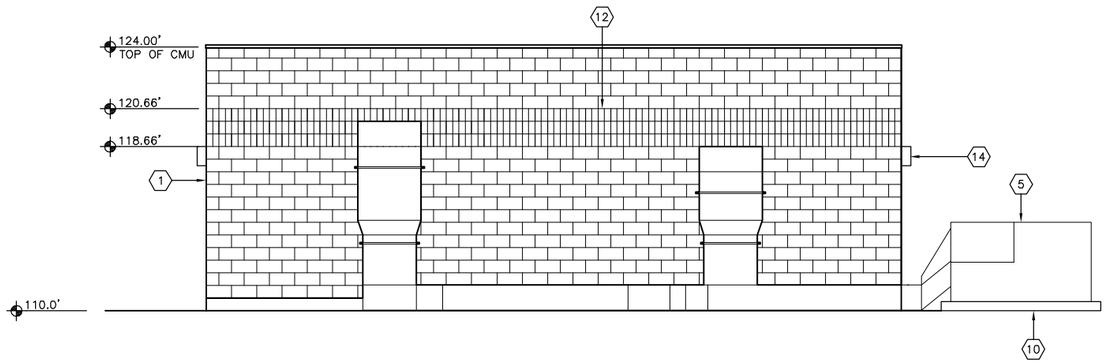

NORTH ELEVATION
SCALE: 1/4" = 1'-0"
A 14A101

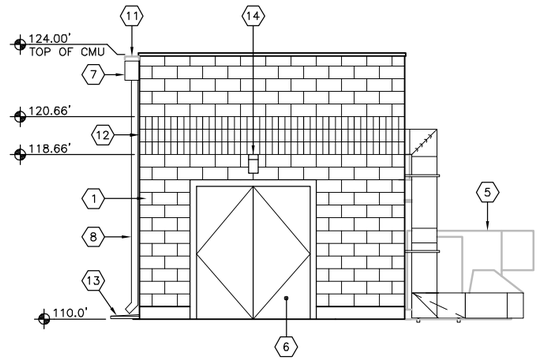

EAST ELEVATION
SCALE: 1/4" = 1'-0"
B 14A101

KEY NOTES:

1. CMU BLOCK.
2. NOT USED.
3. 1'-0"x4'-0" LOUVER.
4. 1'-6"x3'-0" LOUVER.
5. HVAC EQUIPMENT. SEE MECHANICAL DRAWINGS.
6. DOOR 14-101A.
7. SCUPPER.
8. DOWNSPOUT.
9. DOOR 14-101B.
10. EQUIPMENT PAD.
11. OVERFLOW SCUPPER.
12. 3 SCORE BLOCK, 3 COURSES HIGH.
13. SPLASH BLOCK.
14. WALL LIGHT.

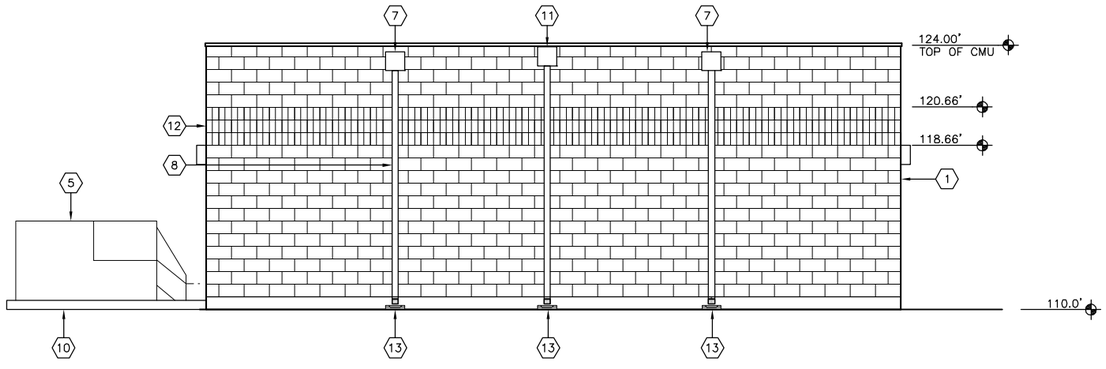

SOUTH ELEVATION
SCALE: 1/4" = 1'-0"
C 14A101

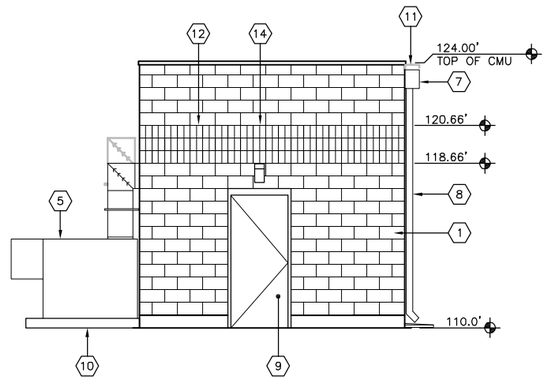

WEST ELEVATION
SCALE: 1/4" = 1'-0"
D 14A101

FILE: 215786-14A102.dwg
DATE: Oct 06, 2015-4:05:21pm, rsnider

HDR Engineering, Inc.

ISSUE	DATE	DESCRIPTION
A	JUNE 2015	ISSUED FOR BID

PROJECT MANAGER	C. OLSON
DESIGNED	C. OLSON
DESIGNED	M. EVERETT
CHECKED	
DRAWN	M. MENDOZA
DATE	JUNE 30, 2015
PROJECT NUMBER	215786

REGISTERED PROFESSIONAL ENGINEER
CRAIG A. OLSON
NO. 39819
EXP. 12/31/15
CIVIL
STATE OF CALIFORNIA

CITY OF PINOLE CALIFORNIA 1903

PINOLE/HERCULES
WATER POLLUTION
CONTROL PLANT UPGRADE
CLIENT PN

ARCHITECTURAL

ELECTRICAL BUILDING ELEVATIONS

0 1" 2"

FILENAME	215786-14A102
SCALE	1/4" = 1'-0"

SHEET
14A102

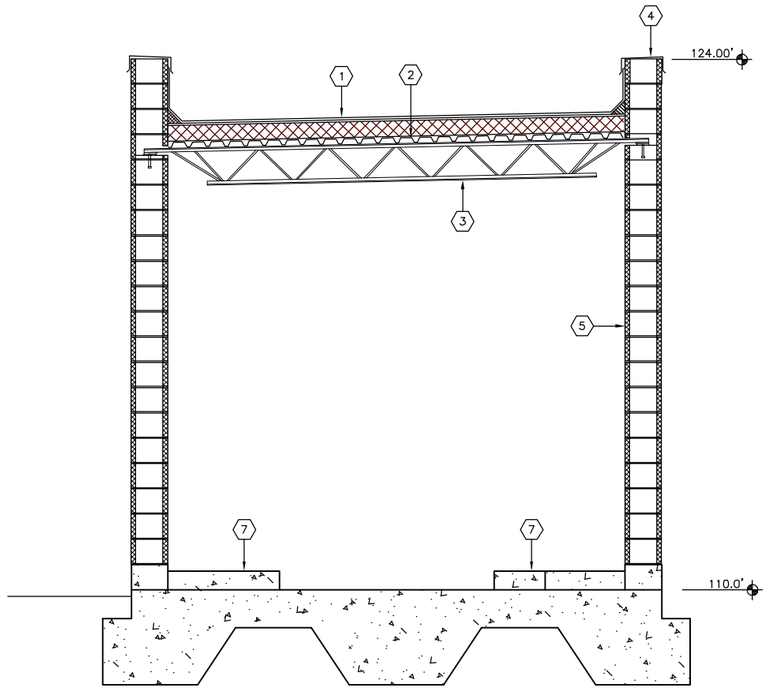

SECTION
SCALE: 1/2" = 1'-0"

A
14A101

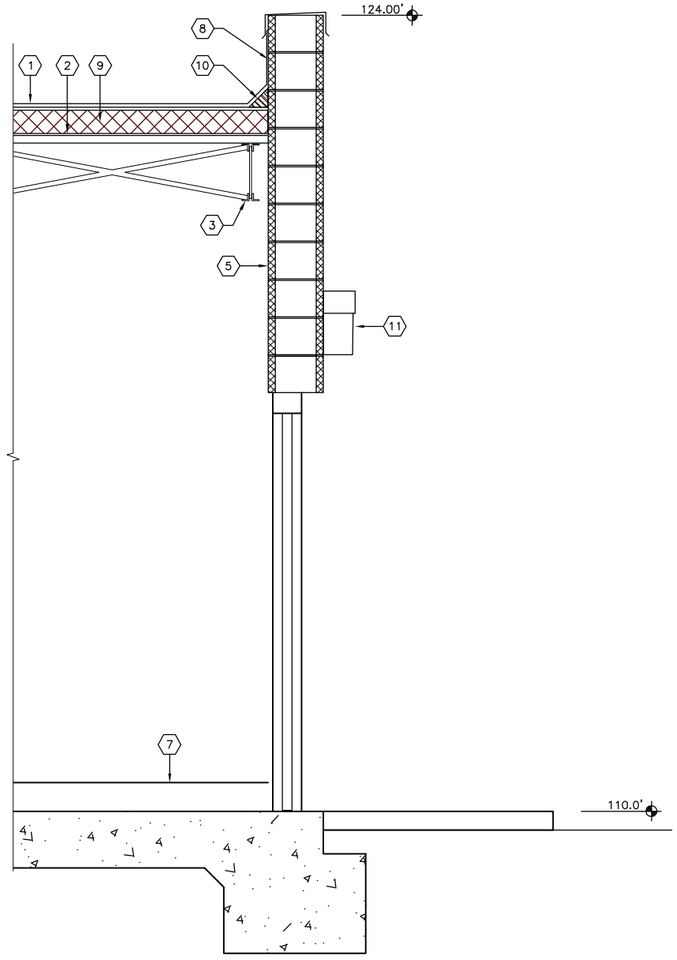

SECTION
SCALE: 3/4" = 1'-0"

B
14A101

KEY NOTES:

1. MEMBRANE ROOFING SYSTEM.
2. METAL DECK.
3. JOIST.
4. WALL TOPPER.
5. CMU.
6. NOT USED.
7. HOUSEKEEPING PAD.
8. SEAL.
9. INSULATION.
10. CANT.
11. WALL LIGHT.

FILE: 215786-14A103.dwg
DATE: Oct 06, 2015-4:05:27pm, ranider

HDR Engineering, Inc.

ISSUE	DATE	DESCRIPTION
A	JUNE 2015	ISSUED FOR BID

PROJECT MANAGER	C. OLSON
DESIGNED	C. OLSON
DESIGNED	M. EVERETT
CHECKED	
DRAWN	R. SNIDER
DATE	JUNE 30, 2015
PROJECT NUMBER	215786

REGISTERED PROFESSIONAL ENGINEER
CRAIG A. OLSON
NO. 39819
EXP. 12/31/15
CIVIL
STATE OF CALIFORNIA
06-30-15

CITY OF PINOLE CALIFORNIA 1903

PINOLE/HERCULES
WATER POLLUTION
CONTROL PLANT UPGRADE
CLIENT PN

ARCHITECTURAL

ELECTRICAL BUILDING SECTIONS AND DETAILS

0 1" 2"

FILENAME	215786-14A103
SCALE	AS NOTED

SHEET
14A103

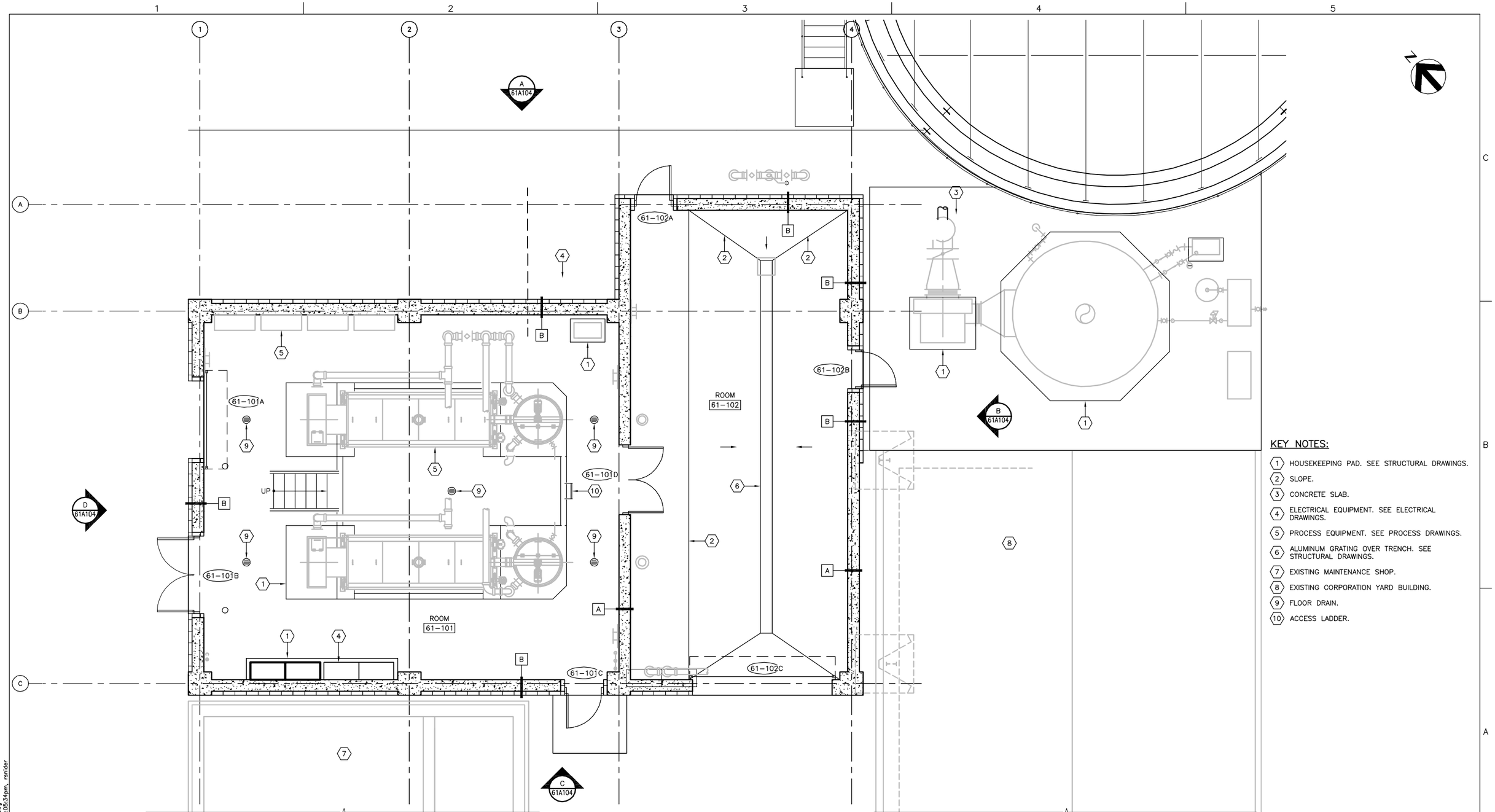

FLOOR PLAN

1/4" = 1'-0"

KEY NOTES:

1. HOUSEKEEPING PAD. SEE STRUCTURAL DRAWINGS.
2. SLOPE.
3. CONCRETE SLAB.
4. ELECTRICAL EQUIPMENT. SEE ELECTRICAL DRAWINGS.
5. PROCESS EQUIPMENT. SEE PROCESS DRAWINGS.
6. ALUMINUM GRATING OVER TRENCH. SEE STRUCTURAL DRAWINGS.
7. EXISTING MAINTENANCE SHOP.
8. EXISTING CORPORATION YARD BUILDING.
9. FLOOR DRAIN.
10. ACCESS LADDER.

FILE: 215786-61A101.dwg
DATE: Oct 06, 2015-4:05:34pm, ranider

HDR Engineering, Inc.

ISSUE	DATE	DESCRIPTION
A	JUNE 2015	ISSUED FOR BID

PROJECT MANAGER	C. OLSON
DESIGNED	C. OLSON
DESIGNED	M. EVERETT
CHECKED	
DRAWN	M. MENDOZA
DATE	JUNE 30, 2015
PROJECT NUMBER	215786

REGISTERED PROFESSIONAL ENGINEER
CRAIG A. OLSON
NO. 39819
EXP. 12/31/15
CIVIL
STATE OF CALIFORNIA
06-30-15

CITY OF PINOLE CALIFORNIA 1903

PINOLE/HERCULES
WATER POLLUTION
CONTROL PLANT UPGRADE
CLIENT PN

ARCHITECTURAL

SOLIDS HANDLING BUILDING
FIRST FLOOR PLAN

0 1" 2"

FILENAME	215786-61A101
SCALE	1/4" = 1'-0"

SHEET
61A101

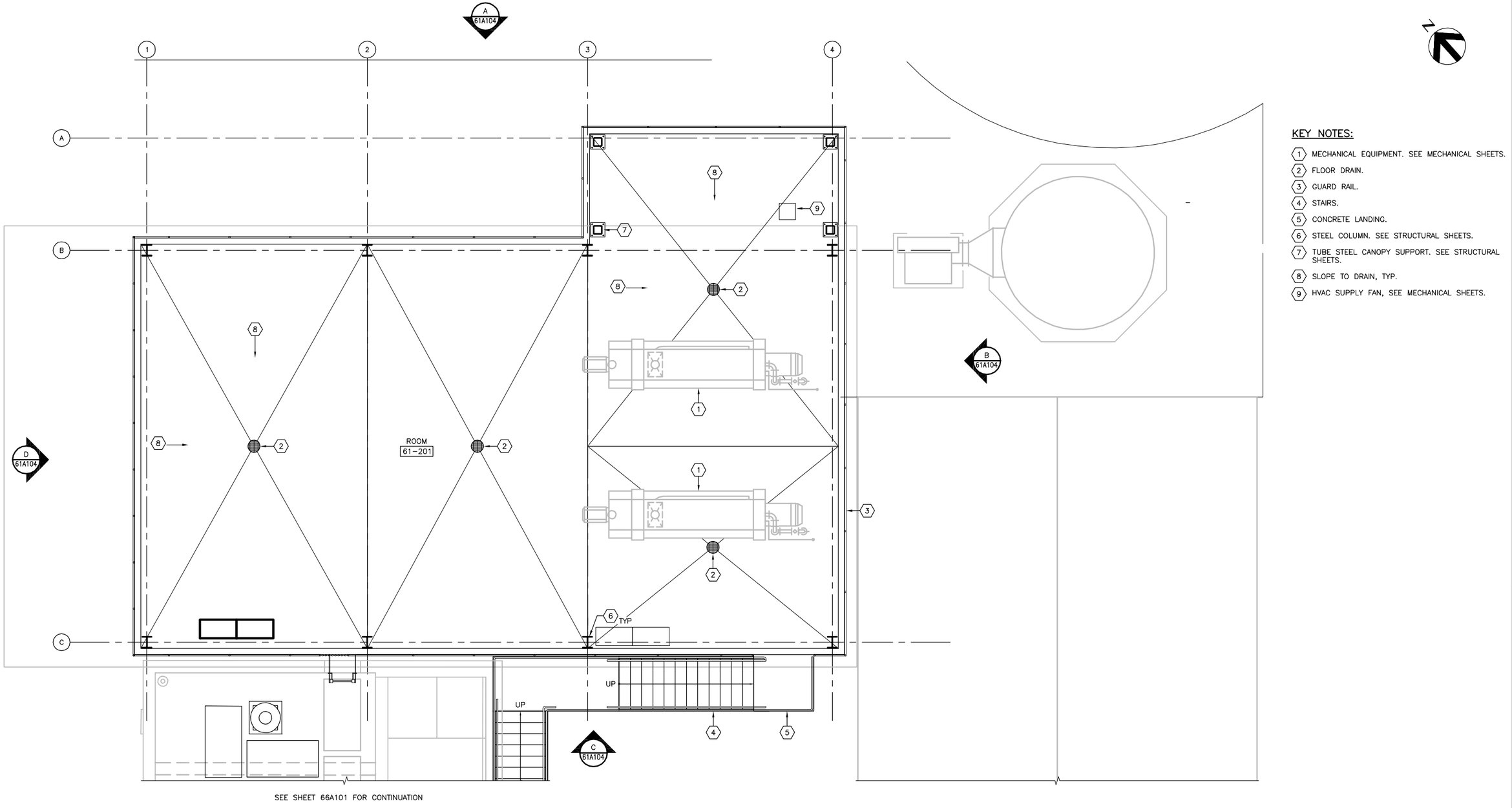

KEY NOTES:

1. MECHANICAL EQUIPMENT. SEE MECHANICAL SHEETS.
2. FLOOR DRAIN.
3. GUARD RAIL.
4. STAIRS.
5. CONCRETE LANDING.
6. STEEL COLUMN. SEE STRUCTURAL SHEETS.
7. TUBE STEEL CANOPY SUPPORT. SEE STRUCTURAL SHEETS.
8. SLOPE TO DRAIN, TYP.
9. HVAC SUPPLY FAN, SEE MECHANICAL SHEETS.

FLOOR PLAN

1/4" = 1'-0"

FILE: 215786-61A102.dwg
DATE: Oct 06, 2015-4:05:40pm, ranider

HDR Engineering, Inc.

ISSUE	DATE	DESCRIPTION
A	JUNE 2015	ISSUED FOR BID

PROJECT MANAGER	C. OLSON
DESIGNED	C. OLSON
DESIGNED	M. EVERETT
CHECKED	
DRAWN	M. MENDOZA
DATE	JUNE 30, 2015
PROJECT NUMBER	215786

REGISTERED PROFESSIONAL ENGINEER
CRAIG A. OLSON
NO. 39819
EXP. 12/31/15
CIVIL
STATE OF CALIFORNIA
06-30-15

CITY OF PINOLE CALIFORNIA 1903

PINOLE/HERCULES
WATER POLLUTION
CONTROL PLANT UPGRADE
CLIENT PN

ARCHITECTURAL

SOLIDS HANDLING BUILDING SECOND FLOOR PLAN

0 1" 2"

FILENAME	215786-61A102
SCALE	1/4" = 1'-0"

SHEET **61A102**

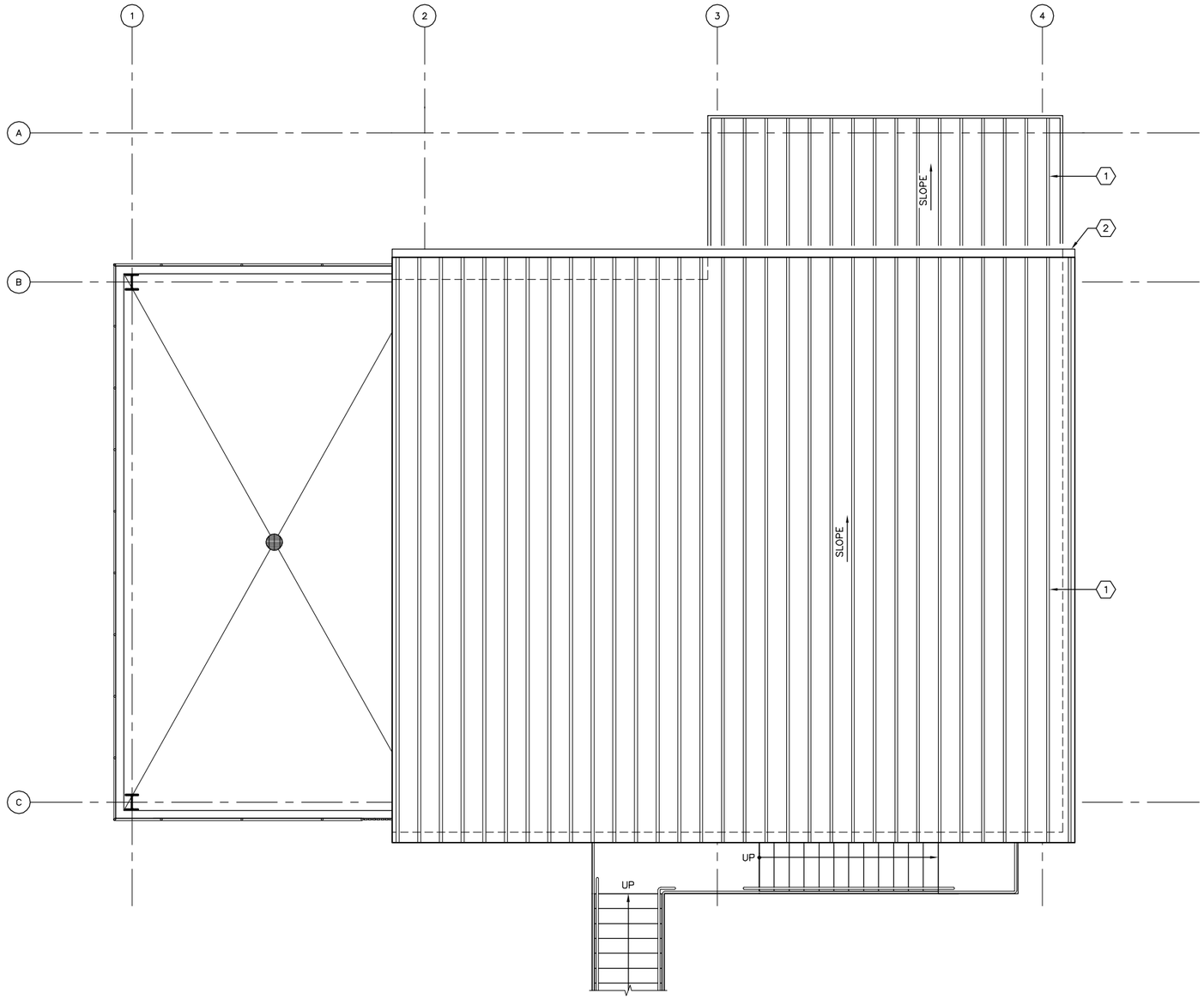

KEY NOTES:

1. METAL STANDING SEAM CANOPY COVER.
2. GUTTER.

ROOF PLAN
1/4" = 1'-0"

FILE: 215786-61A103.dwg
DATE: Oct 06, 2015-4:05:45pm, rsnider

HDR Engineering, Inc.

ISSUE	DATE	DESCRIPTION
A	JUNE 2015	ISSUED FOR BID

PROJECT MANAGER	C. OLSON
DESIGNED	C. OLSON
DESIGNED	M. EVERETT
CHECKED	
DRAWN	M. MENDOZA
DATE	JUNE 30, 2015
PROJECT NUMBER	215786

REGISTERED PROFESSIONAL ENGINEER
CRAIG A. OLSON
NO. 39819
EXP. 12/31/15
CIVIL
STATE OF CALIFORNIA
06-30-15

CITY OF PINOLE CALIFORNIA 1903

PINOLE/HERCULES
WATER POLLUTION
CONTROL PLANT UPGRADE
CLIENT PN

ARCHITECTURAL

SOLIDS HANDLING BUILDING ROOF PLAN

0 1" 2"

FILENAME	215786-61A103
SCALE	1/4" = 1'-0"

SHEET
61A103

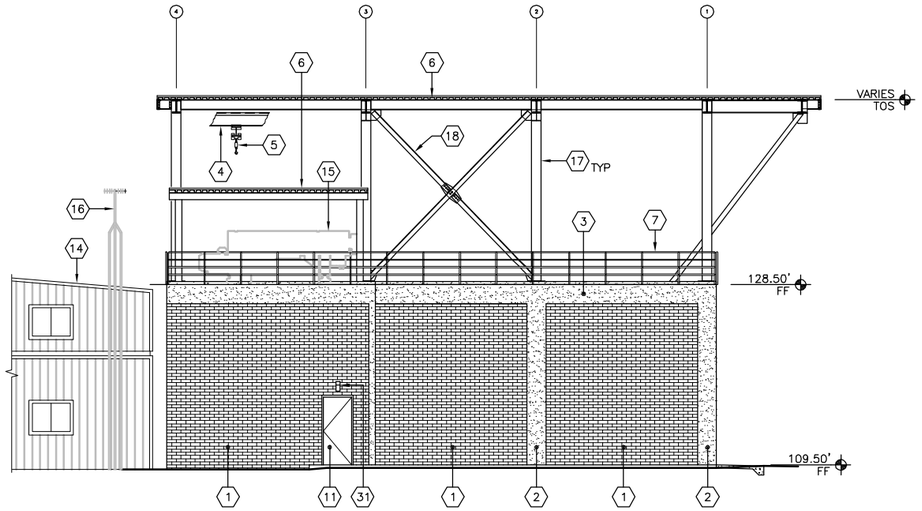

NORTH ELEVATION
1/8" = 1'-0"
A
61A101

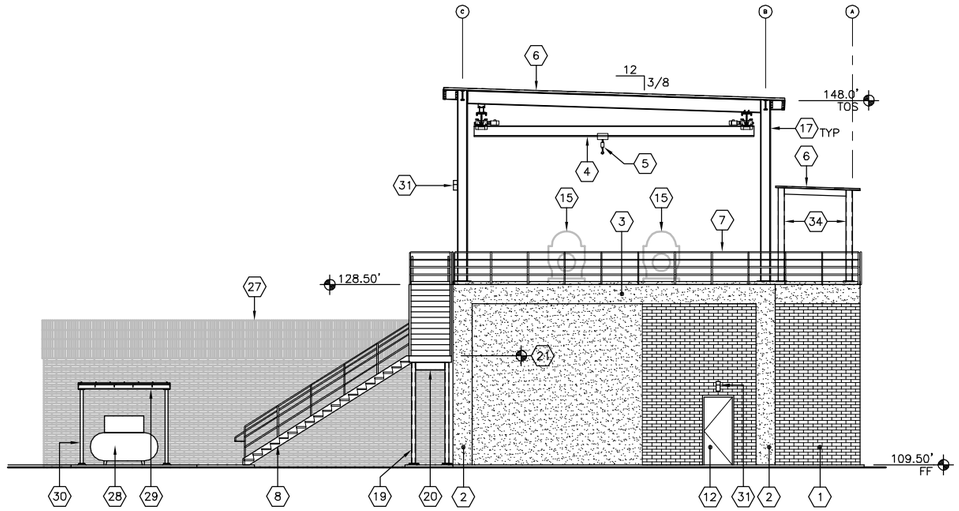

EAST ELEVATION
1/8" = 1'-0"
B
61A101

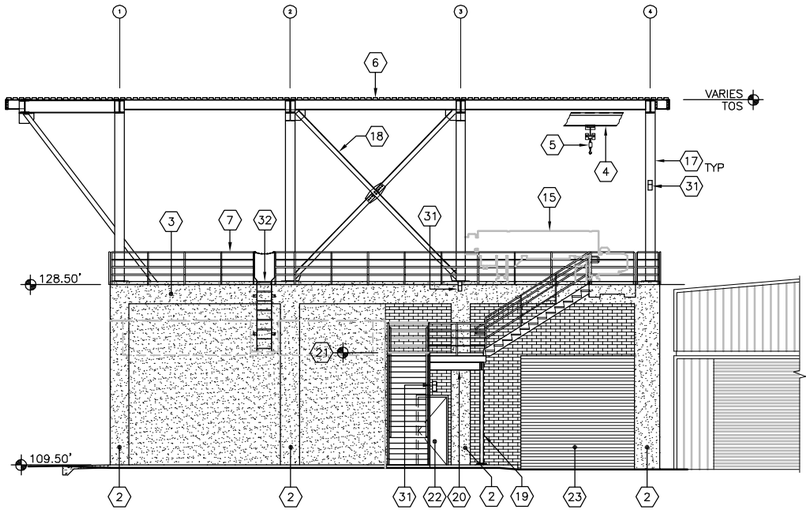

SOUTH ELEVATION
1/8" = 1'-0"
C
61A101

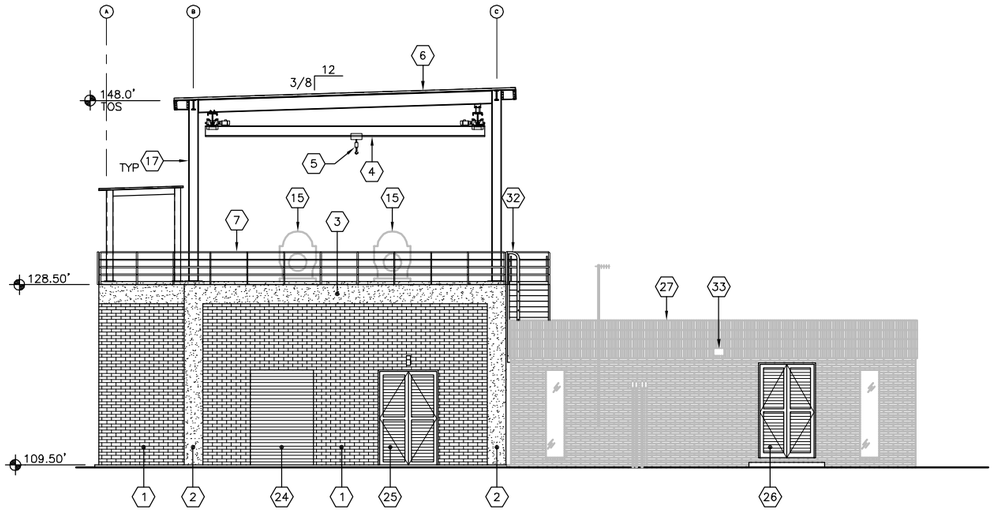

WEST ELEVATION
1/8" = 1'-0"
D
61A101

KEY NOTES:

1. BRICK VENEER.
2. EXPOSED CONCRETE COLUMN.
3. EXPOSED CONCRETE BEAM.
4. BRIDGE CRANE SUPPORT.
5. BRIDGE CRANE.
6. METAL STANDING SEAM CANOPY ROOF.
7. GUARD RAIL.
8. ACCESS STAIRS. 32 RUNS @ 11 INCHES, 33 RISERS @ 6.9 INCHES.
9. GUTTER.
10. DOWNSPOUT.
11. DOOR 61-102A
12. DOOR 61-102B
13. (E) MAINTENANCE SHOP.
14. (E) CORPORATION YARD BUILDING.
15. PROCESS EQUIPMENT. SEE PROCESS DRAWINGS.
16. ANTENNA. SEE ELECTRICAL DRAWINGS.
17. STEEL COLUMN. SEE STRUCTURAL DRAWINGS.
18. STEEL BRACING. SEE STRUCTURAL DRAWINGS.
19. HSS COLUMN. TYPICAL OF 4.
20. W BEAM, TYPICAL OF 4.
21. STAIR LANDING EQUALS 11'-6".
22. DOOR 61-101C
23. DOOR 61-102C
24. DOOR 61-101A
25. DOOR 61-101B
26. DOOR 66-101
27. (E) MAINTENANCE SHOP
28. AIR COMPRESSOR AND RECEIVER TANK
29. METAL CANOPY
30. 4" STRUCTURAL TUBE SUPPORT
31. LIGHT
32. LADDER
33. (E) LIGHT
34. TUBE STEEL CANOPY SUPPORT, SEE STRUCTURAL SHEETS

FILE: 215786-61A104.dwg
DATE: Oct 06, 2015-4:05:50pm, ranider

HDR Engineering, Inc.

ISSUE	DATE	DESCRIPTION
A	JUNE 2015	ISSUED FOR BID

PROJECT MANAGER	C. OLSON
DESIGNED	C. OLSON
DESIGNED	M. EVERETT
CHECKED	
DRAWN	M. MENDOZA
DATE	JUNE 30, 2015
PROJECT NUMBER	215786

REGISTERED PROFESSIONAL ENGINEER
CRAIG A. OLSON
NO. 39819
EXP. 12/31/15
CIVIL
STATE OF CALIFORNIA

CITY OF PINOLE CALIFORNIA 1903

PINOLE/HERCULES
WATER POLLUTION
CONTROL PLANT UPGRADE
CLIENT PN

ARCHITECTURAL

SOLIDS HANDLING BUILDING ELEVATIONS

0 1" 2"

FILENAME	215786-61A104
SCALE	1/8" = 1'-0"

SHEET
61A104

SEE SHEET 61A101 FOR CONTINUATION

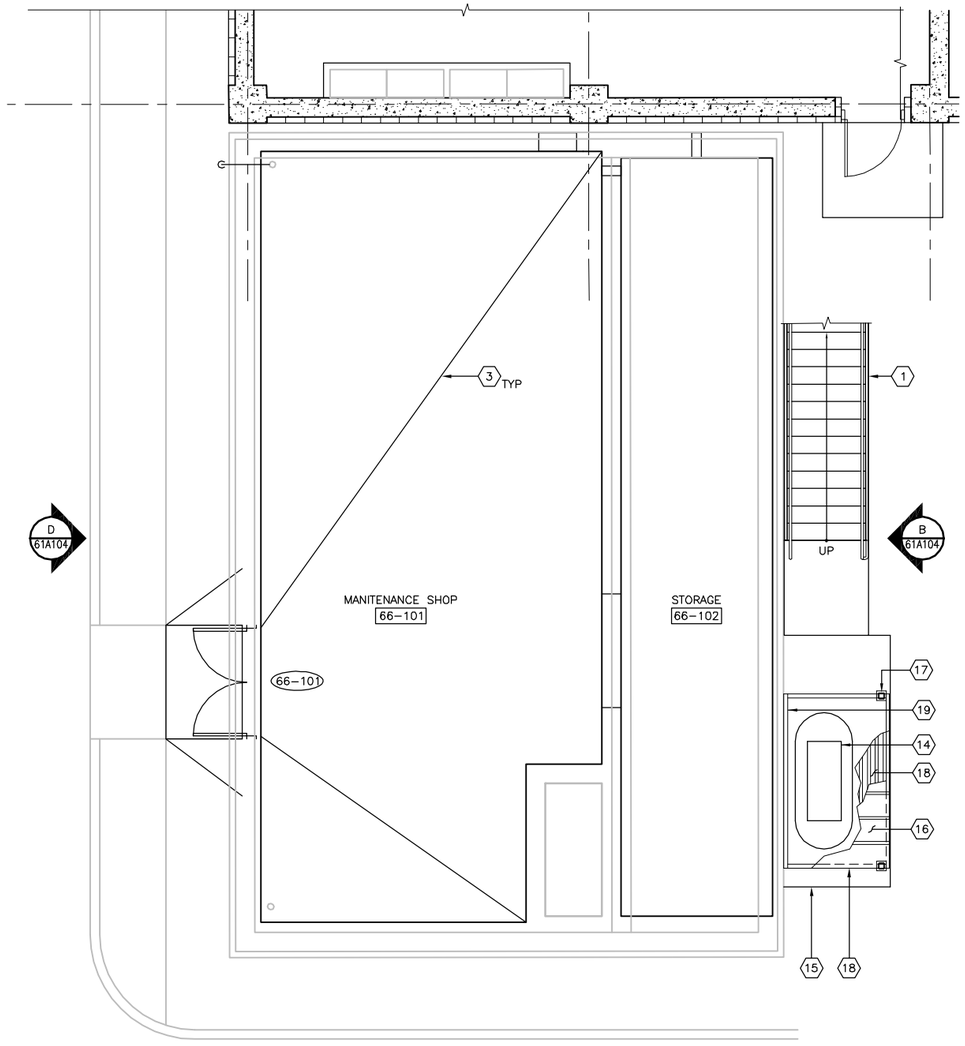

FIRST FLOOR PLAN

1/4" = 1'-0"

SEE SHEET 61A102 FOR CONTINUATION

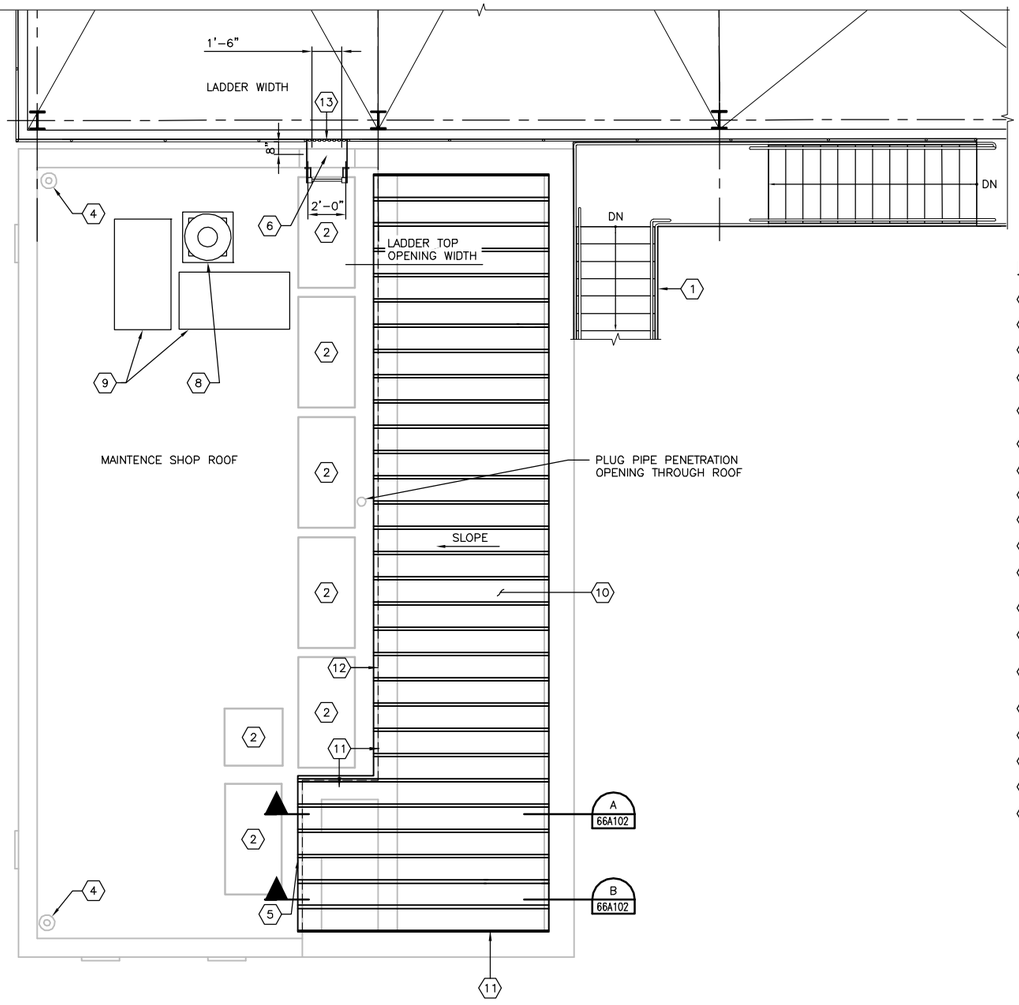

ROOF PLAN

1/4" = 1'-0"

KEY NOTES:

1. STAIRS.
2. (E) ROOF WQALKWAY PAD.
3. FLOOR SLOPE, TYP.
4. (E) ROOF DRAIN.
5. (E) PROCESS EQUIPMENT. SEE PROCESS SHEETS.
6. LADDER.
7. (E) GRATING.
8. EXHAUST FAN.
9. ROOF WALKWAY PAD.
10. STANDING SEAM METAL ROOF.
11. SEAL ALL ALONG BENT PLATE METAL DECK SUPPORTS.
12. EXISTING WALL BELOW.
13. SAFETY CHAIN WITH THUMB RELEASE LATCH.
14. AIR COMPRESSOR, SEE MECHANICAL SHEETS.
15. CONCRETE EQUIP PAD.
16. STANDING SEAM METAL ROOF.
17. 4X4X1/4" STRUCTURAL TUBE.
18. METAL DECK AND SUPPORT FRAMING.
19. 3"X5"X3/8" ANGLE, LLV. ATTACH TO WALL WITH 1/2" SS ADHESIVE ANCHORS AT 2' OC.

FILE: 215786-66A101.dwg
DATE: Oct 06, 2015-4:05:56pm, ranider

HDR Engineering, Inc.

ISSUE	DATE	DESCRIPTION
A	JUNE 2015	ISSUED FOR BID

PROJECT MANAGER	C. OLSON
DESIGNED	C. OLSON
DESIGNED	M. EVERETT
CHECKED	
DRAWN	M. MENDOZA
DATE	JUNE 30, 2015
PROJECT NUMBER	215786

REGISTERED PROFESSIONAL ENGINEER
CRAIG A. OLSON
NO. 39819
EXP. 12/31/15
CIVIL
STATE OF CALIFORNIA
06-30-15

CITY OF PINOLE CALIFORNIA 1903

PINOLE/HERCULES
WATER POLLUTION
CONTROL PLANT UPGRADE
CLIENT PN

ARCHITECTURAL

MAINTENANCE SHOP
FIRST FLOOR AND ROOF PLANS

0 1" 2"

FILENAME	215786-66A101
SCALE	1/4" = 1'-0"

SHEET **66A101**

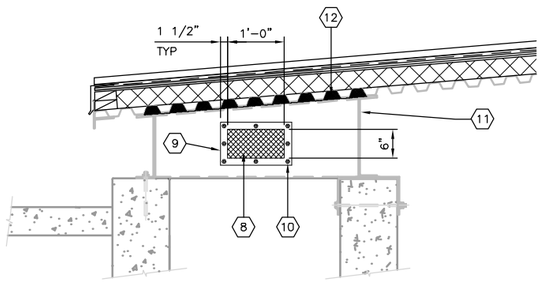

SECTION A 66A101
3/4" = 1'-0"

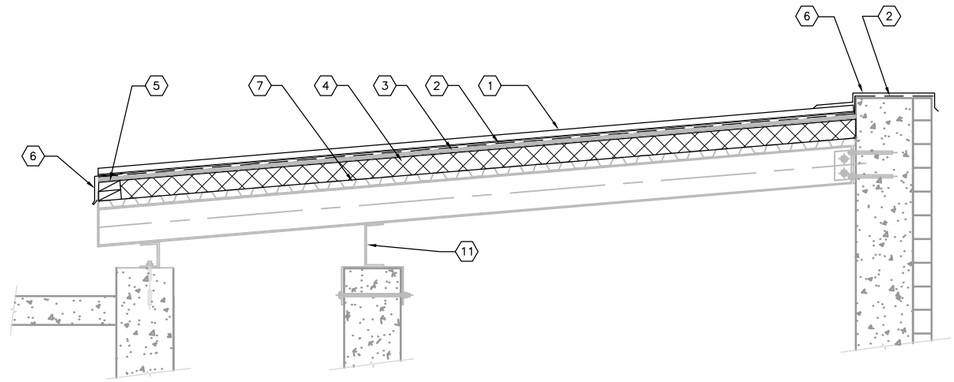

SECTION B 66A102
3/4" = 1'-0"

KEY NOTES:

1. STANDING SEAM METAL ROOF.
2. 30# ROOFING FELT.
3. ⅝" SHEATHING.
4. RIGID INSULATION.
5. PRESSURE TREATED BLOCKING.
6. METAL FLASHING.
7. STRUCTURAL METAL DECK.
8. BRONZE BIRD SCREEN.
9. ALUMINUM SCREEN FRAME.
10. 3/8" SS BOLTS, NUTS, AND LOCK WASHER, TYP.
11. SEAL ALL ALONG BENT PLATE METAL DECK SUPPORTS.
12. SEAL UNDERSIDE OF METAL DECK CORRUGATION WHERE SHOWN.

FILE: 215786-66A102.dwg
DATE: Oct 06, 2015-4:06:00pm, rsnider

HDR
HDR Engineering, Inc.

ISSUE	DATE	DESCRIPTION
A	JUNE 2015	ISSUED FOR BID

PROJECT MANAGER	C. OLSON
DESIGNED	C. OLSON
DESIGNED	M. EVERETT
CHECKED	
DRAWN	M. MENDOZA
DATE	JUNE 30, 2015
PROJECT NUMBER	215786

REGISTERED PROFESSIONAL ENGINEER
THEODORUS A KOMLOSKAS
NO. 29878
EXP. 06/30/15
MECHANICAL
STATE OF CALIFORNIA
06-30-15

CITY OF PINOLE CALIFORNIA 1903

PINOLE/HERCULES
WATER POLLUTION
CONTROL PLANT UPGRADE
CLIENT PN

ARCHITECTURAL

MAINTENANCE SHOP
ROOF SECTIONS

0 1" 2"

FILENAME	215786-66A102
SCALE	AS NOTED

SHEET
66A102

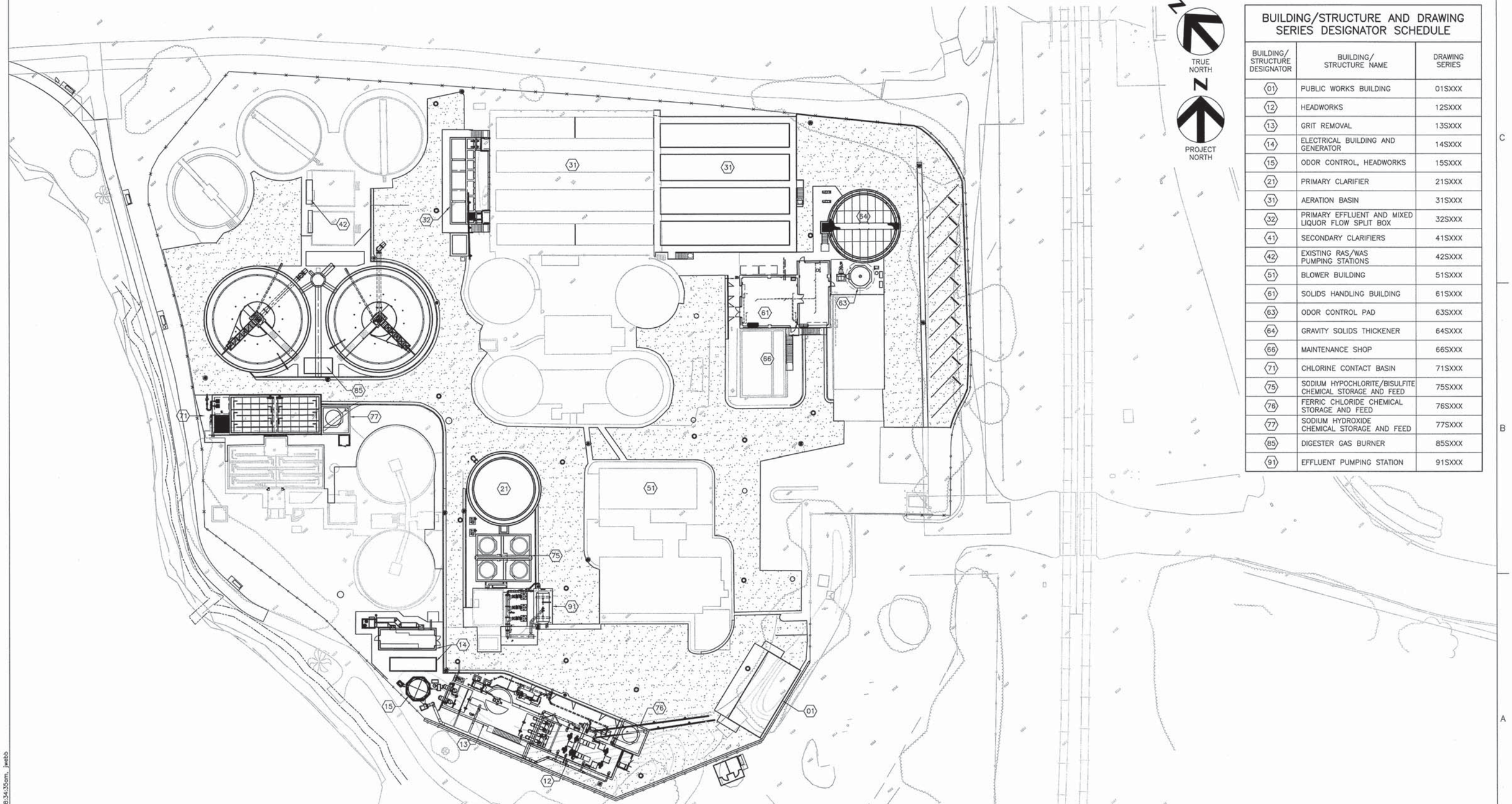

BUILDING/STRUCTURE AND DRAWING SERIES DESIGNATOR SCHEDULE

BUILDING/ STRUCTURE DESIGNATOR	BUILDING/ STRUCTURE NAME	DRAWING SERIES
01	PUBLIC WORKS BUILDING	01SXXX
12	HEADWORKS	12SXXX
13	GRIT REMOVAL	13SXXX
14	ELECTRICAL BUILDING AND GENERATOR	14SXXX
15	ODOR CONTROL, HEADWORKS	15SXXX
21	PRIMARY CLARIFIER	21SXXX
31	AERATION BASIN	31SXXX
32	PRIMARY EFFLUENT AND MIXED LIQUOR FLOW SPLIT BOX	32SXXX
41	SECONDARY CLARIFIERS	41SXXX
42	EXISTING RAS/WAS PUMPING STATIONS	42SXXX
51	BLOWER BUILDING	51SXXX
61	SOLIDS HANDLING BUILDING	61SXXX
63	ODOR CONTROL PAD	63SXXX
64	GRAVITY SOLIDS THICKENER	64SXXX
66	MAINTENANCE SHOP	66SXXX
71	CHLORINE CONTACT BASIN	71SXXX
75	SODIUM HYPOCHLORITE/BISULFITE CHEMICAL STORAGE AND FEED	75SXXX
76	FERRIC CHLORIDE CHEMICAL STORAGE AND FEED	76SXXX
77	SODIUM HYDROXIDE CHEMICAL STORAGE AND FEED	77SXXX
85	DIGESTER GAS BURNER	85SXXX
91	EFFLUENT PUMPING STATION	91SXXX

FILE: 00S00.dwg
DATE: Jun 30, 2015 - 8:34:35am, jwebb

HDR
HDR Engineering, Inc.

ISSUE	DATE	DESCRIPTION
A	JUNE 2015	ISSUED FOR BID

PROJECT MANAGER	C. OLSON
DESIGNED	O. TAVANGAR
DESIGNED	
CHECKED	O. TAVANGAR
DRAWN	D. ELDREDGE
DATE	JUNE 30, 2015
PROJECT NUMBER	215786

REGISTERED PROFESSIONAL ENGINEER
OMID TAVANGAR
No. 54655
EXP. 12/31/15
CIVIL
STATE OF CALIFORNIA
6/30/15

CITY OF PINOLE CALIFORNIA 1903

PINOLE/HERCULES
WATER POLLUTION
CONTROL PLANT UPGRADE
CLIENT PN

STRUCTURAL

DESIGNATION KEY PLAN

0 1" 2"

FILENAME	00S00
SCALE	1" = 30'

SHEET **00S00**

GENERAL STRUCTURAL NOTES (GSN)

GENERAL

G1 SCOPE
THE NOTES ON THIS SHEET AND THE STANDARD STRUCTURAL DETAILS ARE GENERAL AND APPLY TO THE ENTIRE PROJECT WHETHER SPECIFICALLY CALLED OUT OR NOT, EXCEPT WHERE THERE ARE SPECIFIC INDICATIONS TO THE CONTRARY ON STRUCTURAL SHEETS. IF THERE ARE QUESTIONS, THEY SHALL BE SUBMITTED TO THE STRUCTURAL ENGINEER AND ANSWERED IN WRITING PRIOR TO CONSTRUCTION.

G2 APPLICABLE SPECIFICATIONS AND CODES
A. CALIFORNIA BUILDING CODE 2013, WITH APPLICABLE EDITIONS OF THE CODE REFERENCED STANDARDS.
B. ASCE7-10
C. ACI-318-11, ACI-350-06
D. AISC 360 AND 341
E. LOCAL JURISDICTION AMENDMENTS

G3 DESIGN CRITERIA

1. APPLIES TO ALL ABOVE-GRADE STRUCTURES (UNO)
   A. DEAD LOAD:
      1. ACTUAL TRIBUTARY STRUCTURE WEIGHT
      2. SUPERIMPOSED DEAD LOAD: ACTUAL WT. OF ANY MECHANICAL EQUIPMENT.
   B. LIVE LOAD:

1. SLAB ON GRADE, EQUIPMENT AREAS	250 PSF
2. ROOF:	20 PSF (NOT REDUCIBLE)
3. STORAGE, SHOP, MAINTENANCE:	200 PSF
4. WALKWAYS, STAIRWAYS, LANDINGS, PLATFORMS:	100 PSF
5. 2ND FLOOR IN SOLIDS HANDLING BUILDING:	300 PSF
6. BRIDGE CRANE IN SOLIDS HANDLING BUILDING:	3.0 TON
7. MONORAIL IN HEADWORKS:	3.5 KIPS

   C. WIND:
      1. ULTIMATE DESIGN WIND SPEED: V_{ULT} = 115 MPH
      2. NORMAL DESIGN WIND SPEED: V_{asd} = 88 MPH
      3. RISK CATEGORY: III
      4. EXPOSURE: C

STRUCTURE	5. INTERNAL PRESSURE COEFFICIENT
1. CHEMICAL FEED AREAS	0.00
2. ALL OTHER BUILDINGS	±0.18

   D. SEISMIC:
      1. ALL STRUCTURES:
         a. RISK CATEGORY: III
         b. IMPORTANCE FACTOR: 1.25
         c. SPECTRAL RESPONSE ACCELERATION, Ss= 1.736
         d. SPECTRAL RESPONSE ACCELERATION, S1= 0.688
         e. SITE CLASS: D
         f. SEISMIC DESIGN CATEGORY: D
         g. SPECTRAL RESPONSE COEFFICIENT, SDS= 1.157
         h. SPECTRAL RESPONSE COEFFICIENT, SD1= 0.688
         i. BASIC SEISMIC FORCE RESISTING SYSTEM SEE TABLE BELOW.
         j. ANALYSIS PROCEDURE: EQUIVALENT LATERAL FORCE ANALYSIS OR RESPONSE SPECTRUM ANALYSIS.
         k. DESIGN BASE SHEAR: SEE TABLE BELOW.
         l. SEISMIC RESPONSE COEFFICIENT: SEE TABLE BELOW
         m. RESPONSED MODIFICATION FACTOR: SEE TABLE BELOW.

STRUCTURE	i. BASIC SEISMIC FORCE RESISTING SYSTEM:	k. DESIGN BASE SHEAR $V = C_s * W$ W IS THE EFFECTIVE SEISMIC WEIGHT	l. SEISMIC RESPONSE COEFFICIENT (C_S)	m. RESPONSE MODIFICATION FACTOR "R"
SOLIDS HANDLING BUILDING	ORDINARY STEEL CONCENTRIC BRACED FRAME (LONGITUDINAL DIRECTION)	–	*	3.25
	ORDINARY STEEL MOMENT FRAME (TRANSVERSE DIRECTION)	–	*	3.5
	SPECIAL REINF CONCRETE / BEARING SHEAR WALL	660* [k]	0.25	5.0
ELECTRICAL BUILDING	SPECIAL REINF CMU BLDG	40.5[k]	0.262	5.5
GRIT REMOVAL	NONBUILDING STRUCTURE SIMILAR TO BUILDING	1049.0*[k]	0.723	1.25
*: RESPONSE SPECTRUM ANALYSIS PER ASCE 7-10 REQUIREMENTS				

   E. SNOW LOAD: NOT APPLICABLE

G4 SAFETY
SAFETY AND STRUCTURE STABILITY DURING CONSTRUCTION ARE THE SOLE RESPONSIBILITY OF THE CONTRACTOR. STRUCTURES HAVE BEEN DESIGNED TO RESIST THE DESIGN LIVE LOADS ONLY AS A COMPLETED STRUCTURE.

G5 OPENINGS
OPENINGS FOR PIPES, DUCTS, CONDUITS, ETC. ARE NOT ALL SHOWN ON THE STRUCTURAL DRAWINGS. COORDINATE AND PROVIDE OPENINGS AS REQUIRED TO ACCOMMODATE ALL WORK SHOWN OR SPECIFIED IN THE CONTRACT DOCUMENTS AND OTHERWISE REQUIRED FOR THE FURNISHING OF A FUNCTIONALLY COMPLETE PROJECT. REINFORCE AROUND OPENINGS PER STANDARD STRUCTURAL DETAILS UNLESS OTHERWISE SHOWN.

G6 SPECIAL INSPECTIONS
SPECIAL INSPECTIONS ARE REQUIRED IN ACCORDANCE WITH CHAPTER 1 AND CHAPTER 17 OF THE CBC. PAYMENT FOR THESE INSPECTIONS IS NOT THE RESPONSIBILITY OF THE CONTRACTOR. CONTRACTOR SHALL PROVIDE FOR FULL ACCESS TO THE WORK BY THE SPECIAL INSPECTOR AND SHALL PROVIDE FOR THESE INSPECTIONS IN HIS CONSTRUCTION SCHEDULE IN ACCORDANCE WITH THE SPECIFICATIONS. A SPECIAL INSPECTION PLAN WILL BE SUBMITTED UNDER SEPARATE COVER WITH THE PERMIT APPLICATION.

G7 STANDARD DETAILS
THE STANDARD DETAILS DEPICT TYPICAL DETAILING TO BE USED ON THIS PROJECT. IF CONDITIONS ARE NOT EXPLICITLY SHOWN ON THE DRAWINGS THEY SHALL BE MADE SIMILAR TO THE STANDARD DETAILS. OBTAIN APPROVAL OF ENGINEER IN WRITING FOR SIMILAR CONDITIONS PRIOR TO CONSTRUCTION.

G8 THE CONTRACTOR SHALL FIELD VERIFY ALL DIMENSIONS AND ELEVATIONS OF EXISTING CONSTRUCTION AS REQUIRED TO COORDINATE NEW CONSTRUCTION. SUBMIT REQUIRED CHANGES FOR APPROVAL.

G9 CONTRACTOR TO SUBMIT FOR REVIEW ALL EQUIPMENT SIZES, OPERATING WEIGHTS, VIBRATION FORCES, SUPPORT LOCATIONS, ALONG WITH ANY FLOOR OPENINGS, NOTCHES, AND RECESSES REQUIRED BY SUCH EQUIPMENT. CONCRETE SUPPORT PADS AND/OR FRAMING REQUIRED TO SUPPORT SAID EQUIPMENT SHALL NOT BE FABRICATED AND PLACED UNTIL THE CONCRETE SUPPORT PADS AND/OR FRAMING IS APPROVED TO SUPPORT THE EQUIPMENT.

G10 THE FOLLOWING NON-CONTRACTUAL GEOTECHNICAL REPORT WAS DEVELOPED FOR THIS PROJECT AND IS THE BASIS OF THIS STRUCTURAL DESIGN:
GEOTECHNICAL FIRM NAME: HDR ENGINEERING, INC.
ADDRESS: 2121 N. CALIFORNIA BLVD STE 475 WALNUT CREEK, CA 94596
REPORT NUMBER: TBD
REPORT DATE: MARCH 11, 2014
MAT FOUNDATIONS

	BELOW LIQUEFIABLE LAYER	ABOVE LIQUEFIABLE LAYER
ALLOWABLE	2500 PSF (D)	400 PSF (D)
BEARING	3000 PSF (D+L)	500 PSF (D+L)
PRESSURE	3750 PSF (TOTAL)	600 PSF (TOTAL)

PILE FOUNDATIONS:
SKIN FRICTION VARIES FROM ZERO TO 1000 PSF.

CONCRETE:

C1 DESIGN STRENGTHS:
f'c = 4000 PSI
fy = 60,000 PSI

C2 CONCRETE COVER
UNLESS OTHERWISE NOTED, PROVIDE CONCRETE COVER FOR REINFORCING PER DETAIL 2/00S09

C3 SEE SPECIFICATIONS FOR REINFORCING PLACEMENT REQUIREMENTS.

C4 REFER TO OTHER DISCIPLINE DRAWINGS PRIOR TO CONSTRUCTION FOR EMBEDDED ITEMS AND PENETRATIONS NOT SHOWN ON STRUCTURAL DRAWINGS. AS REQUIRED TO ACCOMMODATE ALL WORK SHOWN OR SPECIFIED IN THE CONTRACT DOCUMENTS AND OTHERWISE REQUIRED FOR THE FURNISHING OF A FUNCTIONALLY COMPLETE PROJECT. REINFORCE AROUND OPENINGS PER STANDARD STRUCTURAL DETAILS UNLESS OTHERWISE SHOWN.

C5 PROVIDE 3/4" CHAMFERS AT ALL EXPOSED EDGES AND 1/2" CHAMFERS AT JOINTS AS SHOWN. NOT ALL CHAMFERS MAY BE SHOWN ON DRAWINGS.

C6 FIELD ADJUST REINFORCING AT OPENINGS AND EMBEDDED ITEMS AS INDICATED.

C7 ANCHOR BOLTS NOT SPECIFIED BY ENGINEER SHALL BE DESIGNED AND CERTIFIED BY A REGISTERED PROFESSIONAL ENGINEER, RETAINED BY THE CONTRACTOR, IN ACCORDANCE WITH APPLICABLE PROJECT AND CODE REQUIREMENTS. SUBMIT AS A SHOP DRAWING FOR REVIEW AND APPROVAL BY THE ENGINEER. COORDINATE LOCATION, SIZE AND EMBEDMENT PRIOR TO CASTING CONCRETE.

C8 CONTINUOUS WATERSTOP SHALL BE INSTALLED IN JOINTS SUBJECT TO STATIC WATER PRESSURE.

C9 UNLESS SPECIFICALLY AUTHORIZED BY ENGINEER IN WRITING, ABSOLUTELY NO WELDING OF REINFORCING BARS OR TORCHING TO BEND REINFORCING BARS SHALL BE ALLOWED WITHOUT SPECIFIC APPROVAL FROM THE STRUCTURAL ENGINEER.

C10 CONTRACTOR SHALL SUBMIT A CONCRETE PLACEMENT PLAN PER SPECIFICATION IDENTIFYING JOINT TYPES, JOINT LOCATIONS AND CONCRETE PLACEMENT SEQUENCE.

C11 ALL CAST IN PLACE AND POST-INSTALLED ANCHORS INDICATED IN THE STRUCTURAL DOCUMENTS SHALL COMPLY WITH APPENDIX D OF ACI 318 AND CHAPTER 19 OF THE CBC. ALL EXPANSION AND ADHESIVE ANCHORS SHALL HAVE THE ICC REPORT SHOWING EQUIVALENT LOAD CAPACITY. SUBMIT AND INSTALL PER THE ICC EVALUATION REPORT.

C12 UNLESS OTHERWISE NOTED, ALL WALL REINFORCING BARS SHALL BE CONTINUOUS AROUND CORNERS AND THROUGH COLUMNS OR PILASTERS. REINFORCEMENT SHALL BE EXTENDED INTO CONNECTING WALLS, AND LAPPED ON THE OPPOSITE FACE OF THE CONNECTING WALLS, AS INDICATED ELSEWHERE ON THIS SHEET OR ON THE DRAWINGS. VERTICAL WALL BARS SHALL BE LAPPED WITH DOWELS FROM BASE SLABS AND EXTENDED INTO THE TOP FACE OF ROOF OR FLOOR SLABS AND LAPPED WITH TOP SLAB REINFORCEMENT. UNLESS INDICATED OTHERWISE, CONTRACTOR MAY SPLICE CONTINUOUS SLAB OR LONGITUDINAL BEAM BARS AT LOCATIONS OF IT'S CHOOSING, EXCEPT THAT TOP BAR SPLICES SHALL BE LOCATED AT MIDSPAN AND BOTTOM BAR SPLICES SHALL BE LOCATED AT SUPPORTS. ALL REINFORCEMENT BENDS AND LAPS, UNLESS OTHERWISE NOTED, SHALL SATISFY STANDARD DETAIL. 7/00S09

C13 UNLESS OTHERWISE NOTED, WALL VERTICAL REINFORCING LAYER SHALL BE CLOSEST TO WALL SURFACE, AND WALL HORIZONTAL REINFORCING LAYERS SHALL BE PLACED ATTACHED TO & BETWEEN VERTICAL LAYERS.

ALUMINUM:

A1 STRUCTURAL ALUMINUM YIELD STRENGTHS
STRUCTURAL ALUMINUM: Fy=35 KSI
STRUCTURAL ALUMINUM IS ALLOY 6061-T6 UNO

A2 DIMENSIONS:
TO CENTERLINES OF COLUMNS AND BEAMS, TOP SURFACES OF BEAMS AND TUBES AND BACKS OF CHANNELS AND ANGLES UNO.

A3 ELEVATIONS:
TOP OF ALUMINUM REFERS TO TOP SURFACE OR FLANGE OF MEMBER UNO.

A4 WHEN FILLET WELD SIZE IS NOT INDICATED, PROVIDE MAXIMUM WELD SIZE FOR THE MATERIAL THICKNESS IN ACCORDANCE WITH THE LATEST EDITION OF THE "ALUMINUM DESIGN MANUAL" BY THE ALUMINUM ASSOCIATION.

A5 ALUMINUM IN CONTACT WITH DISSIMILAR MATERIALS OR CONCRETE:
CONTACT SURFACES SHALL BE PROVIDED WITH GALVANIC SEPARATION PER SPECIFICATIONS.

STEEL:

S1 DESIGN STRENGTHS:

WIDE FLANGE AND TEES:	Fy=50 KSI
PIPES:	Fy=35 KSI
STAINLESS STEEL	Fy=33 KSI
HSS SECTIONS	Fy=46 KSI
ALL OTHER PLATES AND SHAPES:	Fy=36 KSI

S2 DIMENSIONS:
TO CENTERLINES OF COLUMNS AND BEAMS, TOP SURFACES OF BEAMS AND TUBES AND BACKS OF CHANNELS AND ANGLES UNO.

S3 ELEVATIONS:
TOP OF STEEL REFERS TO TOP SURFACE OF MEMBER OR FLANGE UNO.

S4 WHEN FILLET WELD SIZE IS NOT INDICATED, PROVIDE MINIMUM WELD SIZE AS SPECIFIED BY AISC OR 3/16", WHICHEVER IS GREATER.

S5 ALL BOLTED STRUCTURAL CONNECTIONS ARE BEARING TYPE CONNECTIONS UNLESS OTHERWISE SPECIFIED TO BE SLIP-CRITICAL. PROVIDE LOAD INDICATING WASHERS AT SLIP-CRITICAL CONNECTIONS.

S6 CONFORM TO AISC 360, STEEL CONSTRUCTION MANUAL AND AISC 341, SEISMIC DESIGN MANUAL.

S7 ALL STEEL BEAMS SHALL RECEIVE STANDARD CAMBER PER THE SPECIFICATIONS UNLESS NOTED OTHERWISE ON THE PLANS. BEAMS REQUIRING SPECIAL CAMBER ARE DENOTED ON THE BEAMS SHOWN ON THE FRAMING PLANS. EXAMPLE: (+1/2") INDICATES ½".

S8 THE SEISMIC LOAD RESISTING SYSTEM (SLRS) IS DENOTED ON THE FRAMING PLANS AND FRAME ELEVATIONS. THE SLRS DESIGNATION INCLUDES THE MEMBER AND CONNECTIONS AT EACH END. FRAMES ARE DENOTED AS FOLLOWS:
A. MOMENT FRAME: (SLRS)
B. CONCENTRICALLY BRACED FRAME: (SLRS)
FOR SLRS SYSTEMS OR PARTS OF SYSTEMS THAT ARE NOT INCLUDED IN FRAMES, (SLRS) IS PLACED NEXT TO THE BEAM SIZE ON THE FRAMING PLAN (eg: ON A COLLECTOR ELEMENT (DRAG STRUT): MEMBER DESIGNATION (SLRS)

S9 ENCASED STEEL:
STANDARD SHAPE STRUCTURAL STEEL COMPLETELY ENCASED IN CONCRETE OR GROUT SHALL NOT BE GALVANIZED OR PAINTED AND SHALL HAVE A CLEAN SURFACE FOR BONDING TO CONCRETE OR GROUT WHEN IT IS PLACED.

S10 PAINTING:
STRUCTURAL STEEL SHALL BE PAINTED IN ACCORDANCE WITH SPECIFICATIONS.

S11 STAINLESS STEEL:
STAINLESS STEEL CONSTRUCTION SHALL BE IN ACCORDANCE WITH AISI SPECIFICATIONS. UNLESS OTHERWISE NOTED, STEEL IN CONTACT WITH SEWAGE SHALL BE AISI TYPE 316 STAINLESS STEEL. ALL STEEL WITHIN ONE FOOT HORIZONTALLY OR VERTICALLY OF SEWAGE SHALL BE STAINLESS STEEL. WHERE NOT SPECIFICALLY INDICATED ON DRAWINGS OR IN ABOVE NOTE, STAINLESS STEEL SHALL BE AISI TYPE 304.

S12 PROVIDE SPACER PLATES (STITCH PLATE) FOR DOUBLE ANGLE BRACINGS PER CBC 2013 REQUIREMENTS.

S13 ALL SHOP AND FIELD WELDS SHALL BE PREQUALIFIED WELDS. ANY WELDS BEYOND THE RANGE OR TOLERANCE OR REQUIREMENTS FOR PREQUALIFICATION SHALL BE QUALIFIED BY TEST PER AWS D1.1 SECTION 5 PART B. WELDS AT BASE METALS OVER 2" IN THICKNESS ARE NOT ALLOWED AS PREQUALIFIED WELD JOINTS WITHOUT TESTING.

S14 TO ASSURE THE PROPER AMPERAGE AND VOLTAGE OF THE WELDING PROCESS, THE USE OF A HAND HELD CALIBRATED AMP AND VOLT METER SHALL BE USED. THIS EQUIPMENT SHALL BE USED BY THE FABRICATOR, ERECTOR AND THE INSPECTORS. AMPERAGE AND VOLTAGE SHALL BE MEASURED NEAR THE ARC. TRAVEL SPEED AND ELECTRODE STICK OUT SHALL BE VERIFIED TO BE IN COMPLIANCE WITH THE APPROVED WPS.

S15 ALL COMPLETE JOINT PENETRATION (CP) GROOVE WELDS SHALL BE INSPECTED AND TESTED PER ENGINEER REQUIREMENTS.

S16 PREHEAT AND INTERPASS TEMPERATURES FOR THE LATERAL-FORCE-RESISTING ELEMENTS ONLY:

S16.1 THE PREHEAT TEMPERATURES AND CONDITIONS GIVEN IN A.W.S. D1.1-96, ANNEX XI, TABLE XI-2, SHOULD BE STRICTLY OBSERVED USING A MEDIUM RESTRAINT LEVEL AND A MINIMUM SUSCEPTIBILITY INDEX OF "D". EXCEPTION: PLATES 2" AND THICKER AND GROUP 4 AND 5 SHAPES SHALL BE PREHEATED TO 300 DEG. F.

S16.2 PREHEAT TEMPERATURES SHOULD BE MEASURED AT A DISTANCE FROM THE WELD EQUAL TO THE THICKNESS OF THE PART BEING WELDED, BUT NOT LESS THAN THREE INCHES, IN ANY DIRECTION INCLUDING THE THROUGH THICKNESS OF THE PIECE U.N.O. IN THE CONTRACT DOCUMENTS. WHERE PLATES ARE OF DIFFERENT THICKNESS, THE PRE-HEAT REQUIREMENT FOR THE THICKER PLATE SHALL GOVERN. MAINTENANCE OF THESE TEMPERATURES THROUGH THE EXECUTION OF THE WELD (I.E. THE INTERPASS TEMPERATURE) IS ESSENTIAL. MAXIMUM INTERPASS TEMPERATURES SHOULD BE LIMITED TO 550 DEGREES F FOR PRE-QUALIFIED W.P.S., FOR FRACTURE-CRITICAL APPLICATIONS. HIGHER INTERPASS TEMPERATURES COULD BE EMPLOYED IF THOSE HIGHER TEMPERATURE LIMITS ARE QUALIFIED BY TEST.

STRUCTURAL STEEL (CONT)

S17. NON-DESTRUCTIVE TESTING OF WELDED CONNECTIONS SHALL BE PERFORMED AT BRACING CONNECTION FILLET WELDS AND AT ALL FULL OR PARTIAL PENETRATION GROOVE WELDS DESIGNATED TO BE A PART OF THE LATERAL FORCE-RESISTING-SYSTEM:

S17.1. WELDED CONNECTIONS SHALL BE TESTED BY NON-DESTRUCTIVE METHODS FOR COMPLIANCE WITH IBC SECTION 2249 J2 OR 2251 J2. ULTRASONIC TESTING SHALL BE IN ACCORDANCE WITH AWS D1.1M ASTM E94 AND E99. AND ASME SECTION V. THIS TESTING SHALL BE PERFORMED BY AN APPROVED TESTING LABORATORY.

S18. THE FOLLOWING SPECIAL REQUIREMENTS SHALL APPLY TO BEAM TO COLUMN CONNECTIONS WITH WELDED BEAM FLANGES DESIGNATED AS A PART OF THE LATERAL-FORCE-RESISTING SYSTEM:

S18.1. NO "WELD DAMS" ARE ALLOWED.
S18.2. BEAM FLANGE TO COLUMN WELDS SHALL BE MADE BEFORE BOLTS ARE TENSIONED.
S18.3. WELDING SEQUENCE: BOTH FLANGES SHALL BE WELDED PRIOR TO ANY SUPPLEMENTAL WELDING TO THE SHEAR TAB.
S18.4. RUN-OFF TABS PER A.W.S. D1.1 ARE REQUIRED FOR THE COMPLETE PENETRATION (C.P.) FLANGE GROVE WELDS. ALL WELDS ARE TO BE STARTED AND COMPLETED ON THE RUN-OFF TABS AS MUCH AS PRACTICABLE.
S18.5. RUN-OFF TABS SHALL BE REMOVED AND THE ENDS GROUND SMOOTH (I.E. NO PITS OR GOUGES, SUITABLE FOR MAGNETIC PARTICLE TESTING). BACK-UP BARS, IF USED, SHALL BE REMOVED AT ALL BEAM BOTTOM FLANGES, BACK-GOUGED AND BACK-WELDED. BACK-UP BARS AT TOP FLANGES MAY REMAIN.
S18.6. THE WELD ROOT SHALL BE INSPECTED AND TESTED PER A.W.S. REQUIREMENTS GIVEN IN CHAPTER 6. IF REJECTABLE INDICATIONS ARE FOUND, REMOVE BY BACK-GOUGING TO SOUND METAL.
S18.7. A FILLET WELD SHALL BE APPLIED TO REINFORCE THE JOINT. THE SIZE OF THE REINFORCING WELD SHALL BE EQUAL TO ONE QUARTER OF THE BEAM FLANGE THICKNESS (T), BUT NOT LESS THAN 1/4" NOR MORE THAN 3/8" PER NOTE J OF FIGURE 3.4 OF D1.1-96.
S18.8. WELDS FOR THE BOTTOM BEAM FLANGE TO THE COLUMN FLANGE SHALL BE AS FOLLOWS:
S18.8.1. THE ROOT PASS SHOULD NOT EXCEED A 1/4" IN LAYER THICKNESS.
S18.8.2. THE WELD SHALL BE INITIATED ON THE WELD TAB, WITH TRAVEL PROGRESSING TOWARD THE CENTER OF THE GIRDER FLANGE WIDTH. WHEN THIS APPROACH IS USED, THE WELDER SHOULD STOP WELD APPROXIMATELY 1" BEFORE THE BEAM WEB. IT IS NOT ADVISABLE TO LEAVE THE WELD CRATER DIRECTLY IN THE CENTER OF THE BEAM FLANGE WIDTH SINCE THIS WILL HINDER POST-WELD OPERATIONS.
S18.8.3. THE HALF LENGTH ROOT PASS SHALL BE THOROUGHLY CLEANED OF ALL SLAG.
S18.8.4. THE END OF THE HALF LENGTH ROOT PASS THAT IS NEAR THE CENTER OF THE BEAM FLANGE SHOULD BE VISUALLY INSPECTED TO ENSURE FUSION, SOUNDNESS, AND FREEDOM FROM SLAG INCLUSIONS AND EXCESSIVE POROSITY. THE RESULTING BEAD PROFILE SHOULD BE SUITABLE FOR OBTAINING FUSION BY THE SUBSEQUENT PASS TO BE INITIATED ON THE OPPOSITE SIDE OF THE GIRDER WEB. IF THE PROFILE IS NOT CONDUCIVE TO GOOD FUSION, THE START OF THE FIRST ROOT PASS SHOULD BE GROUND GOUGED, CHIPPED OR OTHERWISE PREPARED TO ENSURE ADEQUATE FUSION.
S18.8.5. THE SECOND HALF OF THE WELD JOINT SHALL HAVE THE ROOT PASS APPLIED BEFORE ANY OTHER WELD PASSES ARE PERFORMED. THE ARC SHOULD BE INITIATED AT THE END OF THE HALF LENGTH ROOT PASS THAT IS NEAR THE CENTER OF THE BEAM FLANGE, AND TRAVEL SHOULD PROGRESS TO THE OUTBOARD END OF THE JOINT, TERMINATING ON THE WELD TAB.
S18.8.6. EACH WELD LAYER SHALL BE COMPLETED ON BOTH SIDES OF THE JOINT BEFORE A NEW LAYER IS DEPOSITED.
S18.8.7. WELD TABS SHALL BE REMOVED AND GROUND FLUSH TO THE BEAM FLANGE.

STEEL BAR JOIST:

SJ1. STEEL JOISTS ARE SHOWN CONCEPTUALLY ON THE DRAWINGS AND SHALL BE DESIGNED BY THE CONTRACTOR FOR THE LOADINGS INDICATED.

SJ2. STEEL JOISTS AND BRIDGING SHALL BE DESIGNED BY THE MANUFACTURER TO RESIST LOADS INDICATED ON ROOF PLAN.

SJ3. CONCENTRATED LOADS SHALL BE LOCATED WITHIN 4 INCHES OF A PANEL POINT OR SPECIAL REINFORCEMENT MUST BE ADDED.

SJ4. JOIST BRIDGING SHALL BE DESIGNED BY THE STEEL JOIST MANUFACTURER.

SJ5. ADJUST JOIST BRIDGING DESIGN AND DETAILING WHERE MECHANICAL DUCTS OR OTHER OBSTRUCTIONS RUN BETWEEN THE JOISTS.

DEFERRED APPROVALS:

CONTRACTOR TO FURNISH, DESIGN, DETAIL, AND INSTALL STRUCTURAL COMPONENTS LISTED BELOW. INSTALLATION AND DESIGN SHALL BE IN CONFORMANCE WITH THE 2013 CALIFORNIA BUILDING CODE, OSHA REGULATIONS, DRAWINGS, AND SPECIFICATIONS. CALCULATIONS FOR ALL MEMBERS AND CONNECTIONS (INCLUDING ANCHOR BOLTS ATTACHING STRUCTURAL COMPONENTS TO THEIR FOUNDATIONS) MUST BE PREPARED, STAMPED AND SIGNED BY A REGISTERED CIVIL OR STRUCTURAL ENGINEER LICENSED IN THE STATE OF CALIFORNIA AND MUST BE SUBMITTED WITH SHOP DRAWINGS. SHOP DRAWINGS MUST BE STAMPED AND SIGNED BY THE REGISTERED CIVIL OR STRUCTURAL ENGINEER THAT PREPARES THE CALCULATIONS.

1) STEEL JOISTS
2) METAL STAIRS, LANDINGS, PLATFORMS AND THEIR SUPPORTS
3) GRATINGS INCLUDING PLANK GRATINGS, CHECKERED PLATES AND SUPPORTS
4) FRP LADDERS, COVER PANELS, BAFFLE WALLS AND FRAMING SUPPORTS
5) RAILINGS AND THEIR ANCHORAGE
6) PRECAST MANHOLES AND VAULTS
7) PROCESS/MECHANICAL EQUIPMENT ANCHORAGE
8) TEMPORARY AND PERMANENT SHEET PILE RETAINING WALLS
9) ALUMINUM CANOPY IN SOLID HANDLING BUILDING

NOT FOR CONSTRUCTION

FILE: 00S01.dwg
DATE: Jun 30, 2015 - 10:16:00am, rvalles

HDR Engineering, Inc.

ISSUE	DATE	DESCRIPTION
A	JUNE 2015	ISSUED FOR BID

PROJECT MANAGER	C. OLSON
DESIGNED	O. TAVANGAR
DESIGNED	
CHECKED	O. TAVANGAR
DRAWN	D. ELDREDGE
DATE	JUNE 30, 2015
PROJECT NUMBER	215786

REGISTERED PROFESSIONAL ENGINEER OMID TAVANGAR NO. 54655 EXP. 12/31/15 CIVIL STATE OF CALIFORNIA 6/30/15

CITY OF PINOLE CALIFORNIA 1903

PINOLE/HERCULES WATER POLLUTION CONTROL PLANT UPGRADE
CLIENT PN

STRUCTURAL

GENERAL STRUCTURAL NOTES - 1

0 1" 2"

FILENAME	00S01
SCALE	AS NOTED

SHEET 00S01

STEEL DECK:

SD1 THE DESIGN, FABRICATION, AND ERECTION OF METAL DECKING SHALL BE IN ACCORDANCE WITH THE CURRENT EDITION OF THE SDI SPECIFICATIONS AND THE SDI DIAPHRAGM MANUAL.

SD2 FOR SIZE, THICKENESS AND DETAILS OF STEEL ROOF DECK SEE TYPICAL METAL DECK DETAIL SHEET.

SD3 STEEL ROOF DECK IS TO BE A STRUCTURAL DIAPHRAGM AND SHALL BE FASTENED AS SHOWN ON THE DRAWINGS.

SD4 THE PLANS INDICATE DECK SPAN DIRECTION AND SHALL BE A THREE SPAN DECK MINIMUM.

SD5 SUSPENDED CEILINGS, LIGHT FIXTURES, DUCTS, AND OTHER UTILITIES SHALL NOT BE SUPPORTED FROM THE STEEL DECK, UNLESS COMPLIES WITH REQUIREMENTS OF HANGING LOADS AS OUTLINED BELOW.

GUIDELINES FOR HANGING LOADS:

1. NO LOAD LARGER THAN 15# SHALL DIRECTLY HANG FROM ROOF METAL DECK.
2. CONTRACTOR TO PROVIDE SUPPLEMENTARY STRUCTURAL ELEMENTS TO HANG LOADS FROM ROOF STRUCTURE IN SUCH A WAY THAT AVERAGE HUNG LOADS DO NOT EXCEED 5 PSF.
3. ALL DIAGONALS BRACING FOR HUNG PIPES, ETC. SHALL BE CONNECTED TO TOP CHORD OF TRUSS JOISTS.

LIGHT GAGE STEEL:

LG1 APPLICABLE CODE
STEEL CONSTRUCTION SHALL CONFORM TO SPECIFICATIONS AND STANDARDS PRESENTED IN THE LATEST EDITION OF AISI, SPECIFICATIONS FOR DESIGN OF COLD FORMED STEEL STRUCTURAL MEMBERS.

LG2 MATERIAL
ALL STRUCTURAL SHAPES, BARS, PLATES AND SHEETS INDICATED ON THE SHEETS SHALL BE STEEL MEETING ASTM A653 STAINLESS STEEL GRADE SPECIFICATIONS, UNLESS OTHERWISE NOTED. Fy = 40 KSI, MINIMUM.

LG3 WELDING
WELDING SHALL CONFORM AWS-D1.1 STRUCTURAL WELDING CODE STEEL, AND AWS-01.3 STRUCTURAL WELDING CODE - SHEET STEEL.

LG4 CONNECTIONS
1. MANUFACTURER RECOMMENDED SELF DRILLING SELF TAPPING SCREWS WITH CORROSION RESISTANT PLATED FINISH. FASTENERS SHALL BE SUFFICIENT SIZE AND NUMBER TO ENSURE THE STRENGTH OF THE CONNECTION.
2. WELDING: COMPLY WITH AWS D 1.1 WHEN APPLICABLE AND AWS D 1.3 FOR WELDING BASE METALS LESS THAN 1/8 INCH (3.2 MM) THICK.
3. OTHER FASTENERS AS ACCEPTED BY THE LIGHT GAGE STEEL ENGINEER.

LG5 PAINTING
LIGHT GAGE STEEL SHALL BE PAINTED OR GALVANIZED IN ACCORDANCE WITH SPECIFICATIONS.

MASONRY:

M1 DESIGN STRENGTHS:
f'm= 1500 PSI
fy = 60,000 PSI

M2 GROUT FOR FILLING MASONRY CAVITIES TO BE COARSE GROUT UNO, MAXIMUM COARSE AGGREGATE SIZE IS 3/8 INCH.

M3 GROUT POURS SHALL NOT EXCEED 4 FEET IN HEIGHT UNLESS CLEANOUTS ARE PROVIDED IN THE BOTTOM COURSE OF THE CELL(S) TO BE GROUTED AND WRITTEN PERMISSION IS OBTAINED FOR HIGH LIFT GROUTING.

M4 RESTRICTED BAR ANCHORAGE:
IN CASES WHERE REINFORCING BARS CANNOT BE EXTENDED AS FAR AS REQUIRED, THE BARS SHALL EXTEND AS FAR AS POSSIBLE AND END IN STANDARD HOOK. SHOW ON SHOP DRAWINGS AND HIGHLIGHT WITH A BOX TO BRING TO ENGINEER'S ATTENTION.

M5 ANCHOR BOLTS:
ALL EXPANSION AND ADHESIVE ANCHORS SHALL HAVE THE ICC REPORT SHOWING EQUIVALENT LOAD CAPACITY. SUBMIT AND INSTALL PER THE ICC EVALUATION REPORT.

M6 IF BOND BEAMS AT INTERSECTING WALLS ARE SHOWN ON THE DRAWINGS TO MEET AT DIFFERENT ELEVATIONS, EXTEND REIFORCING OF BOTH BOND BEAMS AROUND INTERSECTING CORNER NOT LESS THAN 4 FEET IN EACH DIRECTION.

M7 LINTEL BLOCKS SHALL NOT BE USED AS BOND BEAM BLOCKS EXCEPT AT OPENINGS WHERE BOND BEAMS AND LINTELS COINCIDE.

M8 MINIMUM REINFORCEMENT:
SEE STANDARD BLOCKWALL DETAILS FOR REINFORCEMENT UNO ON PLANS. ALL BLOCKWALLS ARE OF BEARING TYPE.

M9 EXTRA REINFORCING IS REQUIRED AT OPENINGS, SEE STANDARD STRUCTURAL DETAILS

M10 ALL REINFORCING STEEL SHALL BE IN ACCORDANCE WITH ASTM A615, GRADE 60, DEFORMED BARS. USE A706 FOR WELDED REINFORCEMENT.

M11 ALL REINFORCING STEEL SHALL HAVE MINIMUM OF 1/2" GROUT COMPLETELY AROUND EACH REINFORCING BAR.

M12 MINIMUM LAP SPLICES SHALL BE PER SCHEDULE. 4 / 00S09

CONSTRUCTION AT EXISTING STRUCTURES:

E1 SEE DEMOLITION SHEETS.

E2 IF EXISTING WATERSTOP AND/OR REINFORCING COUPLERS SHOWN IN DRAWINGS ARE DAMAGED, NOT USEABLE OR NOT FOUND, CONTRACTOR SHALL PROVIDE RETROFIT WATERSTOP BY DRILLED AND EPOXY REINFORCING.

E3 WHERE DRILL AND EPOXY REINFORCING OR ANCHORS ARE INSTALLED CONTRACTOR SHALL NOT DAMAGE EXISTING REINFORCING. IF REQUIRED CONTRACTOR SHALL HAVE EXISTING CONCRETE INVESTIGATED USING GROUND PENETRATING RADAR TO LOCATE EXISTING REINFORCING.

E4 EXISTING CONCRETE SURFACES TO BE JOINED WITH NEW CONCRETE SHALL BE THOROUGHLY CLEANED BY SAND BLASTING JUST PRIOR TO PLACEMENT OF NEW CONCRETE.

E5 WHERE EXISTING REINFORCING IS TO BE PRESERVED, CONTRACTOR SHALL STRAIGHTEN AND SAND BLAST REINFORCING JUST PRIOR TO PLACEMENT OF NEW CONCRETE.

E6 PRIOR TO DRILL & EPOXY BOLTS OR REBAR, LOCATE ALL EXISTING REINFORCEMENT. CARE SHALL BE TAKEN NOT TO DISTURB THE EXISTING REINFORCEMENT.

HEADED STUDS AND DEFORMED BAR ANCHORS

1. HEADED STUDS AND DEFORMED BAR ANCHORS SHALL BE ELECTRIC-ARC STUD WELDED PER MANUFACTURER'S RECOMMENDATIONS AND THE AWS CODE. FILLET WELDING SHALL NOT BE ALLOWED WITHOUT APPROVAL OF THE SEOR. WELDMENT SHALL BE IN SUCH A MANNER AS TO PROVIDE COMPLETE FUSION BETWEEN THE END OF THE STUD AND THE PLATE. THERE SHOULD NO POROSITY OR EVIDENCE OF LACK OF FUSION BETWEEN THE WELDED END OF THE STUD AND THE PLATE. THE STUD WILL DECREASE IN LENGTH DURING WELDING APPROXIMATELY 1/8" FOR 5/8" DIAMETER AND SMALLER, AND 3/16" FOR 5/8" DIAMETER AND LARGER STUDS.
2. HEADED STUDS SHALL BE TYPE B PER THE AWS CODE WITH A MINIMUM YIELD STRENGTH OF 50 KSI.
3. HEADED STUDS SHALL BE NELSON GRANULAR FLUX FILLED.
4. ANY SUBSTITUTIONS OF THE ANCHORS ABOVE MUST BE APPROVED BY CONTRACTING OFFICER BY MEANS OF A CHANGE ORDER.
5. STUDS SHALL BE MANUFACTURED OF C-1015 COLD ROLLED STEEL CONFORMING TO ASTM A-108-58-T.
6. DEFORMED BAR ANCHORS SHALL COMPLY WITH ASTM A-108 AND A-496 WITH A MINIMUM YIELD STRENGTH OF 70 KSI.
7. UNLESS NOTED OTHERWISE, DEFORMED BAR ANCHOR LENGTHS SHALL BE AS FOLLOWS:

BAR DIAMETER (IN)	EMBEDMENT (IN)
3/8	24
1/2	24
5/8	30

FILE: 215786-00S02.dwg
DATE: Jun 30, 2015-8:34:46am, jwebb

HDR Engineering, Inc.

ISSUE	DATE	DESCRIPTION
A	JUNE 2015	ISSUED FOR BID

PROJECT MANAGER	C. OLSON
DESIGNED	O. TAVANGAR
DESIGNED	
CHECKED	O. TAVANGAR
DRAWN	D. ELDREDGE
DATE	JUNE 30, 2015
PROJECT NUMBER	215786

REGISTERED PROFESSIONAL ENGINEER
OMID TAVANGAR
NO. 54655
EXP. 12/31/15
CIVIL
STATE OF CALIFORNIA
6/30/15

CITY OF PINOLE CALIFORNIA 1903

PINOLE/HERCULES
WATER POLLUTION
CONTROL PLANT UPGRADE
CLIENT PN

STRUCTURAL

GENERAL STRUCTURAL NOTES - 2

0 1" 2"

FILENAME	215786-00S02
SCALE	NTS

SHEET **00S02**

SCHEDULE OF SPECIAL INSPECTION SERVICES

INSPECTION ITEM REQUIRED	FREQUENCY		CODE REFERENCE	REMARKS
	CONTINUOUS	PERIODIC		
SOIL & EARTHWORK				
VERIFY MATERIALS BELOW SHALLOW FOUNDATIONS ARE ADEQUATE TO ACHIEVE THE DESIGN BEARING CAPACITY.		●	IBC 1705.6	
VERIFY EXCAVATIONS ARE EXTENDED TO PROPER DEPTH AND HAVE REACHED PROPER MATERIAL.		●		
PERFORM CLASSIFICATION AND TESTING OF COMPACTED FILL MATERIALS.		●		
VERIFY USE OF PROPER MATERIALS, DENSITIES AND LIFT THICKNESSES DURING PLACEMENT AND COMPACTION OF COMPACTED FILL.	●			
PRIOR TO PLACEMENT OF COMPACTED FILL, OBSERVE SUBGRADE AND VERIFY THAT SITE HAS BEEN PREPARED PROPERLY.		●		
OBSERVE, TEST AS NEEDED, AND APPROVE FOOTING BEARING PRIOR TO PLACING OF REINFORCING STEEL AND CONCRETE.		●		
CONCRETE & REINFORCING STEEL				
INSPECTION OF REINFORCING STEEL, INCLUDING PRESTRESSING TENDONS, AND PLACEMENT.		●	ACI 318: 3.5, 7.1–7.7 IBC 1910.4	
INSPECTION OF REINFORCING STEEL WELDING IN ACCORDANCE WITH IBC TABLE 1705.2.2, ITEM 2B.			AWS D1.4 ACI 318: 3.5.2	
INSPECTION OF ANCHORS CAST IN CONCRETE WHERE ALLOWABLE LOADS HAVE BEEN INCREASED OR WHERE STRENGTH DESIGN IS USED.		●	ACI 318: 8.1.3, 21.2.8, IBC 1908.5, 1909.1	
INSPECTION OF ANCHORS POST–INSTALLED IN HARDENED CONCRETE MEMBERS.		●	ACI 318: 3.8.6, 8.1.3, 21.2.8, IBC 1909.1	PER ICC REPORT
VERIFY USE OF CORRECT CONCRETE MIX DESIGN AND REVIEW DELIVERY TICKETS		●	ACI 318: CH. 4, 5.2–5.4 IBC 1904.2, 1910.2, 1910.3	
AT THE TIME FRESH CONCRETE IS SAMPLED TO FABRICATE SPECIMENS FOR STRENGTH TESTS, PERFORM SLUMP AND AIR CONTENT TESTS, AND DETERMINE THE TEMPERATURE OF THE CONCRETE.	●		ASTM C 172 ASTM C 31 ACI 318: 5.6, 5.8 IBC 1910.10	ADDITIONAL CYLINDERS SHALL BE MADE AS NEEDED FOR EARLY FORM REMOVAL. NOTE: TWO CYLINDERS ARE REQUIRED FOR AN ACCEPTABLE TEST. A SINGLE CYLINDER BREAK IS UNACCEPTABLE FOR STRENGTH EVALUATION PURPOSES.
TAKE CONCRETE SPECIMENS FOR STRENGTH TESTS TO BE PERFORMED IN LAB. A MINIMUM OF FOUR (4) CYLINDERS SHALL BE MADE. TEST ONE AT SEVEN DAYS AND TWO AT 28–DAYS. THE 4TH CYLINDER SHALL BE TESTED AT 28 DAYS IF ONE OR BOTH OF THE 28–DAY CYLINDER RESULTS ARE BELOW REQUIRED STRENGTH.	●		IBC 1704.4	
PERFORM CONCRETE STRENGTH TESTING IN LAB		●		
MAINTAIN A SPREADSHEET SHOWING DATE, SEQUENTIAL ORDER OF STRENGTH TEST RESULTS AND INDICATE RUNNING AVERAGE	●		ACI 318 PAR. 5.6.3.3	
MEASURE FLOOR FLATNESS AND LEVELNESS AS NEEDED WHEN QUESTIONABLE SURFACES ARE OBSERVED.		●		
POST INSTALLED ANCHORS EPOXY INSTALLED REINFORCING	●			PER ICC REPORT
INSPECTION OF CONCRETE AND SHOTCRETE PLACEMENT FOR PROPER APPLICATION TECHNIQUES.	●		ACI 318: 5.9, 5.10 IBC 1910.6, 1910.7, 1910.8	
INSPECTION FOR MAINTENANCE OF SPECIFIED CURING TEMPERATURE AND TECHNIQUES.		●	ACI 318: 5.11–5.13 IBC 1910.9	
INSPECTION OF PRESTRESSED CONCRETE:			ACI 318: 18.20 ACI 318: 18.18.4	
A. APPLICATION OF PRESSTRESSING FORCES.	●			
B. GROUTING OF BONDED PRESTRESSING TENDONS IN THE SEISMIC FORCE–RESISTING SYSTEM.	●			
ERECTION OF PRECAST CONCRETE MEMBERS.		●	ACI 318: CH. 16	
VERIFICATION OF IN–SITU CONCRETE STRENGTH, PRIOR TO STRESSING OF TENDONS IN POST–TENSIONED CONCRETE AND PRIOR TO REMOVAL OF SHORES AND FORMS FROM BEAMS AND STRUCTURAL SLABS.		●	ACI 318: 6.2	
INSPECT FORMWORK FOR SHAPE, LOCATION AND DIMENSIONS OF THE CONCRETE MEMBER BEING FORMED.		●	ACI 318: 6.1.1	

SCHEDULE OF SPECIAL INSPECTION SERVICES (CONT)

INSPECTION ITEM REQUIRED	FREQUENCY		CODE REFERENCE	REMARKS
	CONTINUOUS/P*	PERIODIC/O*		
STRUCTURAL STEEL				
VERIFY FABRICATOR CERTIFICATION		●	IBC 1704.2	
VERIFY CORRECT STRUCTURAL STEEL MATERIAL DELIVERED TO JOB SITE		●	IBC 1708.4	VERIFY IDENTIFICATION MARKINGS
MANUFACTURERS' CERTIFIED MILL TEST REPORTS		●	IBC 1708.4	
INSPECTION OF WELDING: COMPLETE AND PARTIAL PENETRATION GROOVE WELDS, MULTIPASS FILLET WELDS, SIGNLE–PASS FILLET WELDS ≥ 5/16"	●		IBC 1704.3.1	AWS D1.1
INSPECTION OF WELDING: COMPLETE AND PARTIAL PENETRATION GROOVE WELDS, MULTIPASS FILLET WELDS, SIGNLE–PASS FILLET WELDS ≤ 5/16"		●	IBC 1704.3.1	AWS D1.1
VERIFY CORRECT MATERIAL USED HIGH–STRENGTH BOLTS, NUTS, AND WASHERS		●	AISC LRFD A3.3	
OBSERVE & CHECK TORQUE OF ALL BOLTS IN SLIP–CRITICAL CONNECTIONS	●		IBC 1704.3.3; AISC LRFD M2.5	
INSPECTION OF FABRICATED ITEMS		●	AISC 360 N5.2	VERIFY IDENTIFICATION MARKINGS
REVIEW OF MATERIAL TEST REPORTS AND CERTIFICATIONS FOR COMPLIANCE WITH CONSTRUCTION DOCUMENTS.	●		AISC 360 N3.2, N5.2	
INSPECTION PRIOR TO WELDING:				
A. WELDING PROCEDURE SPECIFICATIONS AVAILABLE		●	AISC 341 J6.1 AISC 360 N5.4, AWS D1.1	
B. MANUFACTURER CERTIFICATIONS FOR WELDING CONSUMABLES AVAILABLE		●		
C. MATERIAL IDENTIFICATION (TYPE/GRADE)	●			
D. WELDER IDENTIFICATION SYSTEM	●			
E. FIT–UP OF GROOVE WELDS (INCLUDING JOINT GEOMETRY)	●			
F. CONFIGURATION AND FINISH OF ACCESS HOLES	●			
G. FIT–UP OF FILLET WELDS	●			
INSPECTION DURING WELDING:				
A. USE OF QUALIFIED WELDERS	●		AISC 341 J6.1, AISC 360 N5.4, AWS D1.1	
B. CONTROL AND HANDLING OF WELDING CONSUMABLES	●			
C. NO WELDING OVER CRACKED TACK WELDS	●			
D. ENVIRONMENTAL CONDITIONS	●			
E. WPS FOLLOWED	●			
F. WELDING TECHNIQUES	●			
INSPECTION AFTER WELDING:				
A. WELDS CLEANED		●	AISC 341 J6.1, AISC 360 N5.4, AWS D1.1	
B. SIZE, LENGTH AND LOCATION OF WELDS	●			
C. WELDS MEET VISUAL ACCEPTANCE CRITERIA	●			
D. ARC STRIKES	●			
E. K–AREA	●			
F. BACKING REMOVED AND WELD TABS REMOVED (IF REQUIRED)	●			
G. REPAIR ACTIVITIES	●			
H. DOCUMENT ACCEPTANCE OR REJECTION OF WELDED JOINT OR MEMBER	●			
INSPECTION PRIOR TO HIGH–STRENGTH BOLTING:				
A. MANUFACTURER'S CERTIFICATIONS AVAILABLE FOR FASTENER MATERIALS	●		AISC 341 J7, AISC 360 N5.6	
B. FASTENERS MARKED IN ACCORDANCE WITH ASTM REQUIREMENTS		●		
C. PROPER FASTENERS SELECTED FOR THE JOINT DETAIL (GRADE, TYPE, BOLT LENGTH IF THREADS ARE TO BE EXCLUDED FROM SHEAR PLANE)		●		
D. PROPER BOLTING PROCEDURE SELECTED FOR JOINT DETAIL		●		
E. CONNECTING ELEMENTS, INCLUDING THE APPROPRIATE FAYING SURFACE CONDITION AND HOLE PREPARATION, IF SPECIFIED, MEET APPLICABLE REQUIREMENTS.		●		
F. PRE–INSTALLATION VERIFICATION TESTING BY INSTALLATION PERSONNEL OBSERVED AND DOCUMENTED FOR FASTENER ASSEMBLIES AND METHODS USED		●		
G. PROPER STORAGE PROVIDED FOR BOLTS, NUTS, WASHERS AND OTHER FASTENER COMPONENTS		●		

* P – PERFORM THESE TASKS FOR EACH WELDED JOINT, BOLTED CONNECTION, OR STEEL ELEMENT.
* O – OBSERVE THESE ITEMS ON A RANDOM BASIS. OPERATIONS NEED NOT BE DELAYED PENDING THESE INSPECTION.

TESTING AND INSPECTION FOR QUALITY ASSURANCE

THE OWNER SHALL EMPLOY QUALIFIED SPECIAL INSPECTORS TO PERFORM INSPECTIONS IN ACCORDANCE WITH THE BUILDING CODE. INSPECTORS SHALL PERFORM ALL DUTIES AND RESPONSIBILITIES AS REQUIRED BY THE BUILDING CODE.

THE SCHEDULE CONTAINS A LIST OF SPECIAL INSPECTION ACTIVITIES RELATED TO THE QUALITY ASSURANCE PLAN REQUIRED BY THE BUILDING CODE (CBC CHAPTER 17) FOR THE FABRICATION, ERECTION AND CONSTRUCTION OF THE STRUCTURAL SYSTEMS AS GIVEN IN THE SPECIFICATIONS AND DRAWINGS OF THE PROJECT. ALL INSPECTORS SHALL BE QUALIFIED BY TRAINING AND EXPERIENCE FOR THE REQUIRED INSPECTIONS AND TEST PROCEDURES. REFER TO CBC CHAPTER 17 "STRUCTURAL TESTS AND SPECIAL INSPECTIONS", FOR SPECIFIC TEST PROCEED.

TESTING AND INSPECTION REPORTS SHALL BE PREPARED FOR EACH INSPECTION ITEM ON A DAILY BASIS WHENEVER WORK IS PERFORMED ON THAT ITEM. REPORTS SHALL BE DISTRIBUTED TO OWNER, CONTRACTOR, BUILDING OFFICIAL (IF REQUESTED), AND ENGINEER FOR THEIR REVIEW, COMMENT, AND ACTION, AS NEEDED.

FILE: 215786–00S03.dwg
DATE: Jun 30, 2015–8:34:49am, jwebb

HDR Engineering, Inc.

ISSUE	DATE	DESCRIPTION
A	JUNE 2015	ISSUED FOR BID

PROJECT MANAGER	C. OLSON
DESIGNED	O. TAVANGAR
DESIGNED	
CHECKED	O. TAVANGAR
DRAWN	D. ELDREDGE
DATE	JUNE 30, 2015
PROJECT NUMBER	215786

REGISTERED PROFESSIONAL ENGINEER OMID TAVANGAR No. 54655 EXP. 12/31/15 CIVIL STATE OF CALIFORNIA 6/30/15

CITY OF PINOLE CALIFORNIA 1903

PINOLE/HERCULES
WATER POLLUTION
CONTROL PLANT UPGRADE
CLIENT PN

STRUCTURAL

SPECIAL INSPECTIONS - 1

0 1" 2"

FILENAME	215786–00S03
SCALE	NTS

SHEET 00S03

SCHEDULE OF SPECIAL INSPECTION SERVICES (CONT)

INSPECTION ITEM REQUIRED	FREQUENCY: CONTINUOUS/P* FOR STRUCTURAL STEEL	FREQUENCY: PERIODIC/O* FOR STRUCTURAL STEEL	CODE REFERENCE	REMARKS
INSPECTION DURING HIGH–STRENGTH BOLTING:				
A. FASTENER ASSEMBLIES, OF SUITABLE CONDITION, PLACED IN ALL HOLES AND WASHERS (IF REQUIRED) ARE POSITIONED AS REQUIRED		•	AISC 341 J7, AISC 360 N5.6	
B. JOINT BROUGHT TO THE SNUG–TIGHT CONDITION PRIOR TO THE PRETENSIONING OPERATION		•		
C. FASTENER COMPONENT NOT TURNED BY THE WRENCH PREVENTED FROM ROTATING		•		
D. FASTENERS ARE PRETENSIONED IN ACCORDANCE WITH THE RCSC SPECTICATION, PROGRESSING SYSTEMATICALLY FROM THE MOST RIGID POINT TOWARD THE FREE EDGES		•		
INSPECTION AFTER HIGH–STRENGTH BOLTING:				
A. DOCUMENT ACCEPTANCE OR REJECTION OF BOLTED CONNECTIONS	•		AISC 360 N5.6	
INSPECTION OF COMPOSITE STRUCTURES PRIOR TO CONCRETE PLACEMENT				
A. MATERIAL IDENTIFICATION OF REINFORCING STEEL (TYPE/GRADE)		•	AISC 341 J9	
B. DETERMINATION OF CARBON EQUIVALENT FOR REINFORCING STEEL OTHER THAN ASTM A706		•		
C. PROPER REINFORCING STEEL SIZE, SPACING AND ORIENTATION		•		
D. REINFORCING STEEL HAS NOT BEEN REBENT IN THE FIELD		•		
E. REINFORCING STEEL HAS BEEN TIED AND SUPPORTED AS REQUIRED		•		
F. REQUIRED REINFORCING STEEL CLEARANCES HAVE BEEN PROVIDED		•		
G. COMPOSITE MEMBER HAS REQUIRED SIZE		•		
H. PLACEMENT AND INSTALLATION OF STEEL DECK	•		AISC 360 N6	
I. PLACEMENT AND INSTALLATION OF STEEL HEADED STUD ANCHORS	•			
J. DOCUMENT ACCEPTANCE OR REJECTION OF STEEL ELEMENTS	•			
INSPECTION OF COMPOSITE STRUCTURES DURING CONCRETE PLACEMENT				
A. CONCRETE: MATERIAL IDENTIFICATION (MIX DESIGN, COMPRESSIVE STRENGTH, MAXIMUM LARGE AGGREGATE SIZE, MAXIMUM SLUMP)		•	AISC 341 J9	
B. LIMITS ON WATER ADDED AT THE TRUCK OR PUMP		•	AISC 341 J9	
C. PROPER PLACEMENT TECHNIQUES TO LIMIT SEGREGATION		•	AISC 341 J9	
INSPECTION OF COMPOSITE STRUCTURES AFTER CONCRETE PLACEMENT				
A. ACHIEVEMENT OF MINIMUM SPECIFIED CONCRETE COMPRESSIVE STRENGTH AT SPECIFIED AGE		•	AISC 341 J9	
STEEL CONSTRUCTION OTHER THAN STRUCTURAL STEEL				
MATERIAL VERIFICATION OF COLD–FORMED STEEL DECK:				
A. IDENTIFICATION MARKINGS TO CONFORM TO ASTM STANDARDS SPECIFIED IN THE APPROVED CONSTRUCTION DOCUMENTS		•	APPLICABLE ASTM MATERIAL STANDARDS	
B. MANUFACTURERE'S CERTIFIED TEST REPORTS		•		
INSPECTION OF WELDING:				
A. COLD–FORMED STEEL DECK:				
1) FLOOR AND ROOF DECK WELDS		•	AWS D1.3	
B. REINFORCING STEEL:				
1) VERIFICATION OF WELDABILITY OF REINFORCING STEEL OTHER THAN ASTM A 706.		•	AWS D1.4, ACI 318: SEC. 3.5.2	
2) REINFORCING STEEL RESISTING FLEXURAL AND AXIAL FORCES IN INTERMEDIATE AND SPECIAL MOMENT FRAMES, AND BOUNDARY ELEMENTS OF SPECIAL STRUCTURAL WALLS OF CONCRETE AND SHEAR REINFORCEMENT	•			
3) SHEAR REINFORCEMENT	•			
4) OTHER REINFORCING STEEL		•		
GENERAL STRUCTURAL OBSERVATIONS				
CONDUCT WEEKLY VISUAL OBSERVATION OF THE STRUCTURAL SYSTEMS FOR GENERAL CONFORMANCE TO THE CONSTRUCTION DOCUMENTS. PREPARE WEEKLY REPORT OF OBSERVATIONS DESCRIBING WORK PROGRESS AND NON–CONFORMING ITEMS.		•		
SPECIAL INSPECTIONS FOR SEISMIC RESISTANCE				
STRUCTURAL STEEL			IBC 1705.11.1, AISC 341 CHAP.J	

* P – PERFORM THESE TASKS FOR EACH WELDED JOINT, BOLTED CONNECTION, OR STEEL ELEMENT.

* O – OBSERVE THESE ITEMS ON A RANDOM BASIS. OPERATIONS NEED NOT BE DELAYED PENDING THESE INSPECTION.

SCHEDULE OF SPECIAL INSPECTION SERVICES (CONT)

INSPECTION ITEM REQUIRED	FREQUENCY: CONTINUOUS	FREQUENCY: PERIODIC	CODE REFERENCE	REMARKS
COLD–FORMED STEEL LIGHT–FRAME CONSTRUCTION				
A. INSPECT WELDING OPERATIONS OF ELEMENTS OF THE SEISMIC FORCE–RESISTING SYSTEM		•	IBC 1705.11.3	
B. INSPECT SCREW ATTACHMENT, BOLTING, ANCHORING AND OTHER FASTENING OF COMPONENTS WITHIN THE SEISMIC FORCE–RESISTING SYSTEM		•		
DESIGNATED SEISMIC SYSTEMS				
A. EXAMINE DESIGNATED SEISMIC SYSTEMS REQUIRING SEISMIC QUALIFICATION AND VERIFY THAT THE LABEL, ANCHORAGE OR MOUNTING CONFORMS TO THE CERTIFICATE OF COMPLIANCE	•		IBC 1705.11.4, 1705.12.3	
ARCHITECTURAL COMPONENTS				
A. INSPECT ERECTION AND FASTENING OF EXTERIOR CLADDING, INTERIOR AND EXTERIOR NONBEARING WALLS AND INTERIOR AND EXTERIOR VENEER		•	IBC 1705.11.5	
MECHANICAL AND ELECTRICAL COMPONENTS				
A. INSPECT ANCHORAGE OF ELECTRICAL EQUIPMENT		•	IBC 1705.11.6	
B. INSPECT INSTALLATION AND ANCHORAGE OF PIPING SYSTEMS, DUCTWORK AND THEIR ASSOCIATED MECHANICAL UNITS DESIGNED TO CARRY HAZARDOUS MATERIALS		•		
C. INSPECT INSTALLATION AND ANCHORAGE OF VIBRATION ISOLATION SYSTEMS WHERE THE CONSTRUCTION DOCUMENTS REQUIRE A NOMINAL CLEARANCE OF ¼ IN OR LESS BETWEEN THE EQUIPMENT SUPPORT FRAME AND RESTRAINT		•		
STORAGE RACKS				
A. INSPECT ANCHORAGE OF STORAGE RACKS 8 FT OR GREATER IN HEIGHT		•	IBC 1705.11.7	
SEISMIC ISOLATION SYSTEMS				
A. INSPECT FABRICATION AND INSTALLATION OF ISOLATOR UNITS AND ENERGY DISSIPATION DEVICES		•	IBC 1705.11.8	PER ICC REPORT
MASONRY CONSTRUCTION				
VERIFY COMPLIANCE WITH THE APPROVED SUBMITTALS		•	ACI 530.1 ART. 1.5	
AS MASONRY CONSTRUCTION BEGINS, VERIFTY THAT THE FOLLOWING ARE IN COMPLIANCE:				
A. PROPORTIONS OF SITE–PREPARED MORTAR		•	ACI 530.1 ART. 2.1, 2.6 A	
B. CONSTRUCTION OF MORTAR JOINTS		•	ACI 530.1 ART. 3.3 B	
C. GRADE AND SIZE OF PRESTRESSING TENDONS AND ANCHORAGES		•	ACI 530.1 ART. 2.4 B, 2.4 H	
D. LOCATION OF REINFORCEMENT, CONNECTORS, AND PRESTRESSING TENDONS AND ANCHORAGES		•	ACI 530.1 ART. 3.4, 3.6 A	
E. PRESTRESSING TECHNIQUE		•	ACI 530.1 ART. 3.6 B	
PRIOR TO GROUTING, VERIFY THAT THE FOLLOWING ARE IN COMPLIANCE:				
A. GROUT SPACE		•	ACI 530.1 ART. 3.2 D, 3.2 F	
B. GRADE, TYPE, AND SIZE OF REINFORCEMENT AND ANCHOR BOLTS, AND PRESTRESSING TENDONS AND ANCHORAGES		•	ACI 530 SEC. 1.16, ACI 530.1 ART. 2.4, 3.4	
C. PLACEMENT OF REINFORCEMENT, CONNECTORS, AND PRESTRESSING TENDONS AND ANCHORAGES		•	ACI 530 SEC. 1.16, ACI 530.1 ART. 3.2 E, 3.4, 3.6 A	
D. PROPORTIONS OF SITE–PREPARED GROUT AND PRESTRESSING GROUT FOR BONDED TENDONS		•	ACI 530.1 ART. 2.6 B, 2.4 G.1.B	
E. CONSTRUCTION OF MORTAR JOINTS		•	ACI 530.1 ART. 3.3 B	
VERIFY DURING CONSTRUCTION:				
A. SIZE AND LOCATION OF STRUCTURAL ELEMENTS		•	ACI 530.1 ART. 3.3 F	
B. TYPE, SIZE, AND LOCATION OF ANCHORS, INCLUDING OTHER DETAILS OF ANCHORAGE OF MASONRY TO STRUCTURAL MEMBERS, FRAMES, OR OTHER CONSTRUCTION		•	ACI 530 SEC. 1.16.4.3, 1.17.1	
C. WELDING OF REINFORCEMENT	•		ACI 530 SEC. 2.1.7.7.2, 3.3.3.4 (C), 8.3.3.4 (B)	
D. PREPARATION, CONSTRUCTION, AND PROTECTION OF MASONRY DURING COLD WEATHER (TEMPERATURE BELOW 40 DEG F OR HOT WEATHER (TEMPERATURE ABOVE 90 DEG F		•	ACI 530.1 ART. 1.8 C, 1.8 D	
E. APPLICATION AND MEASUREMENT OF PRESTRESSING FORCE	•		ACI 530.1 ART. 3.6 B	
F. PLACEMENT OF GROUT AND PRESTRESSING GROUT FOR BONDED TENDONS IS IN COMPLIANCE	•		ACI 530.1 ART. 3.5, 3.6 C	
OBSERVE PREPARATION OF GROUT SPECIMENS, MORTAR SPECIMENS, AND/OR PRISMS		•	ACI 530.1 ART. 1.4 B.2.A.3, 1.4 B.2.B.3, 1.4 B.2.C.3, 1.4 B.3, 1.4 B.4	

FILE: 215786–00S04.dwg
DATE: Jun 30, 2015–8:34:52am, jwebb

HDR Engineering, Inc.

ISSUE	DATE	DESCRIPTION
A	JUNE 2015	ISSUED FOR BID

PROJECT MANAGER	C. OLSON
DESIGNED	O. TAVANGAR
DESIGNED	
CHECKED	O. TAVANGAR
DRAWN	D. ELDREDGE
DATE	JUNE 30, 2015
PROJECT NUMBER	215786

REGISTERED PROFESSIONAL ENGINEER — OMID TAVANGAR — NO. 54655 EXP. 12/31/15 — CIVIL — STATE OF CALIFORNIA — 6/30/15

CITY OF PINOLE CALIFORNIA 1903

PINOLE/HERCULES
WATER POLLUTION
CONTROL PLANT UPGRADE
CLIENT PN

STRUCTURAL

SPECIAL INSPECTIONS - 2

0 1" 2"

FILENAME	215786–00S04
SCALE	NTS

SHEET **00S04**

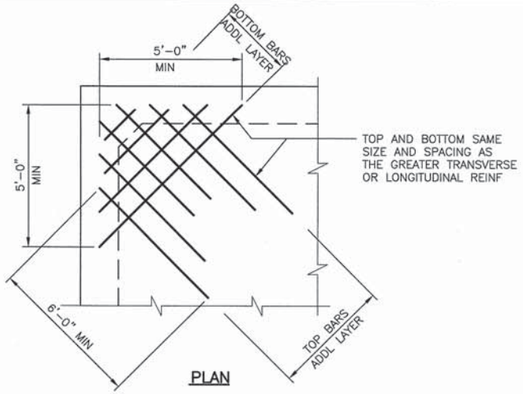

SLAB CORNER

1

NTS

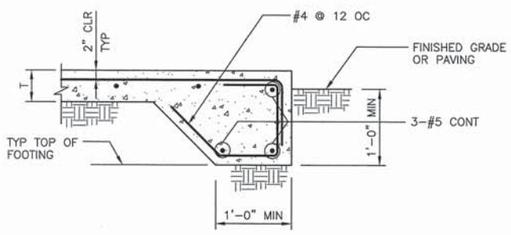

SLAB EDGE

2

NTS

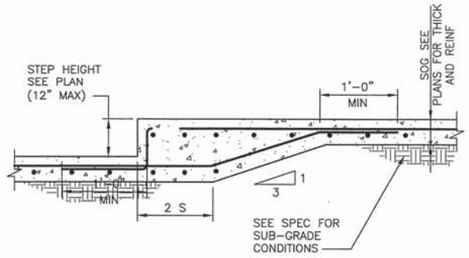

SLAB-ON-GRADE DEPRESSION (FOR ONE LAYER OF REBAR)

3

NTS

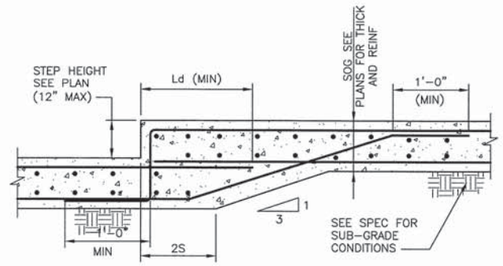

SLAB-ON-GRADE DEPRESSION (FOR TWO LAYERS OF REBAR)

4

NTS

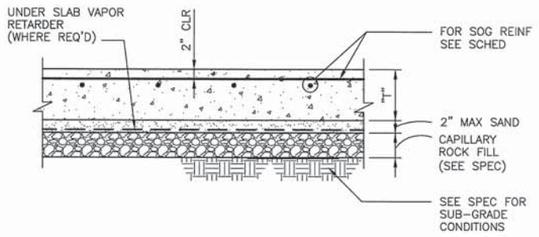

THICK "T"	REINFORCMENT
6"	#4 @ 12" EA WAY O.C.
8"	#5 @ 12" EA WAY O.C.
12"	#5 @ 12" EA WAY T&B
1-2"	#5 @ 12" EA WAY T&B

NOTE:
ELIMINATE 2" LAYER OF SAND WHERE UNDER SLAB VAPOR RETARDER IS NOT REQUIRED.

BUILDING SLAB-ON-GRADE

5

NTS

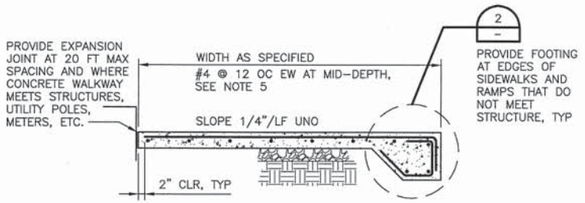

NOTES:

1. PROVIDE BROOM FINISH UNO PER THE REQUIREMENTS OF SPEC SECTION 03348.
2. PROVIDE TOOLED JOINTS AT 5 FOOT CENTERS IN PERPENDICULAR DIRECTIONS.
3. PROVIDE 6" GRANULAR FILL UNDER CONCRETE SIDEWALKS AND LANDINGS, UNLESS OTHERWISE NOTED.
4. PROVIDE 12" GRANULAR FILL UNDER CONCRETE PAVEMENT AND RAMPS.
5. #5 @ 8" OC EW AT MID-DEPTH AT CONCRETE PAVEMENT AND RAMPS.
6. 8" THICKNESS AT CONCRETE PAVEMENT AND RAMPS.

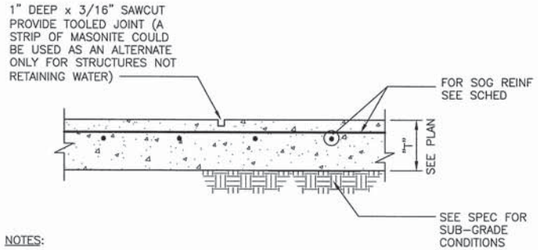

NOTES:

1. SAWCUT TO SUBDIVIDE S.O.G. TO AREAS OF 250 SQUARE FEET OR LESS. AREAS TO BE SQUARE OR APPROXIMATELY SQUARE.
2. SAWCUT AS SOON AS CONCRETE IS FIRM ENOUGH TO WALK ON BUT NO LATER THAN 24 HOURS AFTER POURING.

STRUCTURE SLAB-ON-GRADE CONTROL JOINT

6

NTS

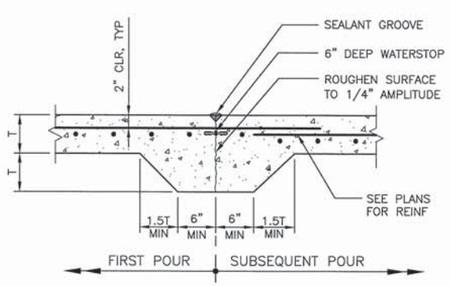

NOTE:
CONTRACTOR TO SUBMIT PROPOSED CONSTRUCTION JOINT LAYOUT (IF DIFFERENT FROM SHOWN ON FLOOR PLAN), FOR REVIEW AND APPROVAL BY ENGINEER OF RECORD PRIOR TO PLACING CONCRETE.

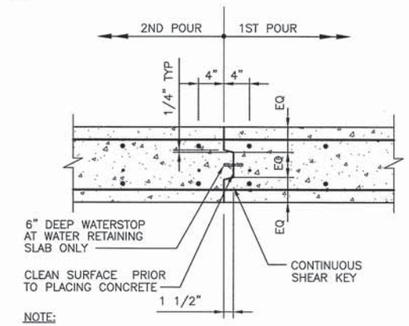

NOTE:
PROVIDE CONSTRUCTION JOINTS. CONTRACTOR SHALL SUBMIT LOCATION FOR REVIEW AND APPROVAL PRIOR TO CONCRETE POUR IF DIFFERENT FROM SHOWN ON PLANS.

SUSPENDED SLAB CONSTRUCTION JOINT

7

NTS

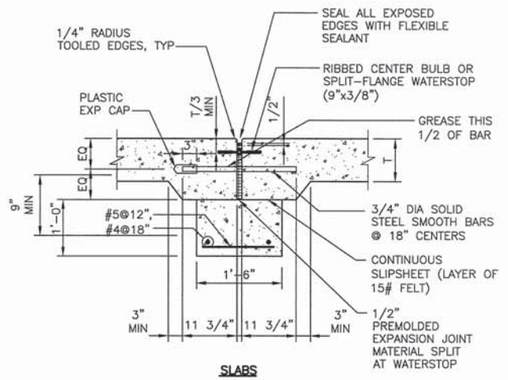

HOUSEKEEPING PAD

8

NTS

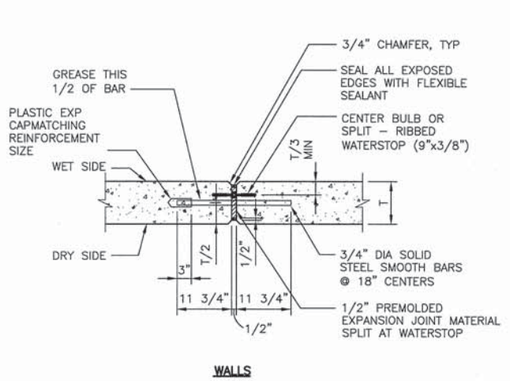

CONCRETE SIDEWALK AND RAMP

9

NTS

CONCRETE SLAB-ON-GRADE CONSTRUCTION JOINT

10

NTS



EXPANSION JOINT

11

NTS

FILE: 00S05.dwg
DATE: Jun 30, 2015-8:34:43am, jwebb

HDR Engineering, Inc.

ISSUE	DATE	DESCRIPTION
A	JUNE 2015	ISSUED FOR BID

PROJECT MANAGER	C. OLSON
DESIGNED	O. TAVANGAR
DESIGNED	
CHECKED	O. TAVANGAR
DRAWN	D. ELDREDGE
DATE	JUNE 30, 2015
PROJECT NUMBER	215786

REGISTERED PROFESSIONAL ENGINEER — OMID TAVANGAR — NO. 54655 EXP. 12/31/15 — CIVIL — STATE OF CALIFORNIA — 6/30/15

CITY OF PINOLE CALIFORNIA — 1903

PINOLE/HERCULES
WATER POLLUTION
CONTROL PLANT UPGRADE
CLIENT PN

STRUCTURAL

TYPICAL CONCRETE DETAILS - I

0 1" 2"

FILENAME	00S05
SCALE	AS NOTED

SHEET **00S05**

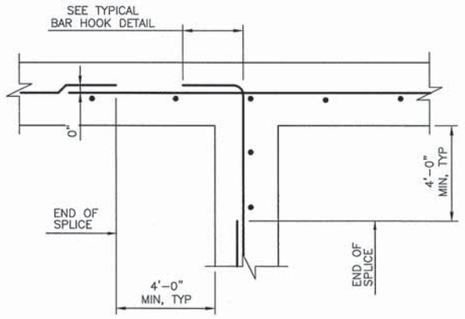

SINGLE-LAYER INTERSECTION

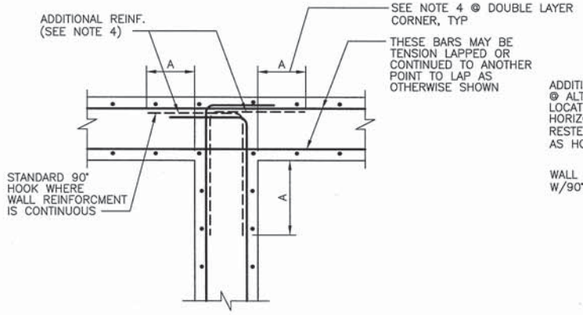

DOUBLE-LAYER INTERSECTION

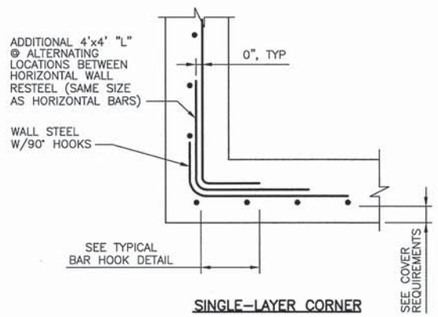

SINGLE-LAYER CORNER

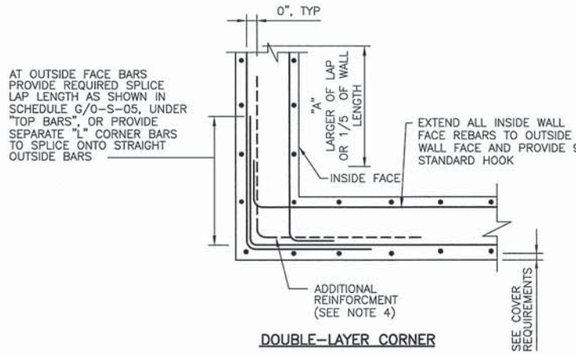

DOUBLE-LAYER CORNER

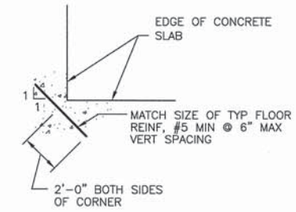

ADDITIONAL REINFORCEMENT
AT RECTANGULAR SLAB CORNER

NOTES:

1. SEE INDIVIDUAL STRUCTURE SHEETS FOR EXTRA HORIZONTAL REBARS AT CORNERS AND WALL INTERSECTIONS.
2. SEE SCHEDULE FOR BAR DEVELOPMENT AND LAP LENGTHS.
3. LONG STRAIGHT BARS WITH LAP SPLICES BENT BARS AT ENDS MAY BE SUBSTITUTED FOR LONG BARS WITH END HOOKS.
4. ADDITIONAL CORNER BARS REQUIRED ONLY AS SPECIFIED ON DESIGN DRAWINGS, AND TO BE STAGGERED. FULL WALL HEIGHT, WITH HORIZONTAL WALL REINFORCING. A=1/5 THE CLEAR SPAN DISTANCE MEASURED HORIZONTALLY BETWEEN WALLS, BUT IN NO CASE LESS THAN THE REQUIRED LENGTH OF LAPPED SPLICES FOR TOP BARS (UNLESS AT A PENETRATION).

HORIZONTAL REINFORCING AT WALL CORNER

1 —

NTS

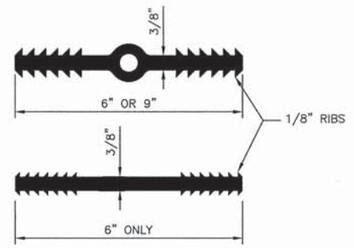

NOTES:

1. – USE 9" AT EXPANSION JOINTS ONLY.
   – USE 6" BULB AT OTHER JOINTS.
2. WATERSTOP TO BE PVC UNLESS NOTED OTHERWISE.

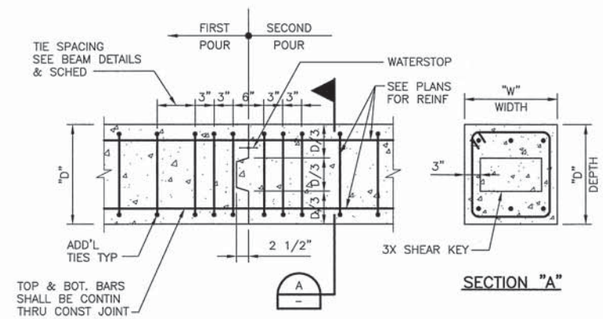

SECTION "A"

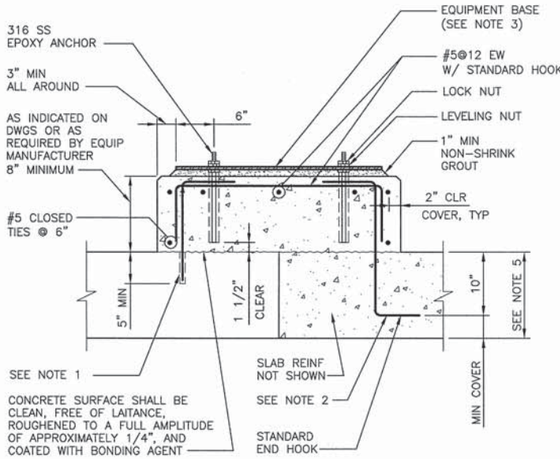

NOTES:

1. FOR NEW EQUIPMENT PADS ON EXISTING SLABS, DRILL INTO EXISTING SLAB AT 12" CENTERS AROUND PERIMETER OF EQUIPMENT PADS AND SET #5 HOOKED DOWELS IN EPOXY GROUT.
2. FOR EQUIPMENT PADS ON NEW SLABS, PROVIDE #5 DOWELS AT 12" CENTERS AROUND PERIMETER OF EQUIPMENT BASE.
3. EQUIPMENT DIMENSIONS SHALL BE AS INDICATED ON THE DRAWINGS OR AS DETERMINED BY THE EQUIPMENT MANUFACTURER AND APPROVED BY THE ENGINEER.
4. EQUIPMENT BASES SHALL BE INSTALLED LEVEL. TOLERANCE IS 1/16".
5. WHERE CONCRETE SLAB THICKNESS WILL NOT PROVIDE MINIMUM COVER AS SPECIFIED ON DWGS, PROVIDE EXTRA THICKNESS OF CONCRETE.

EQUIPMENT PAD

4 —

NTS

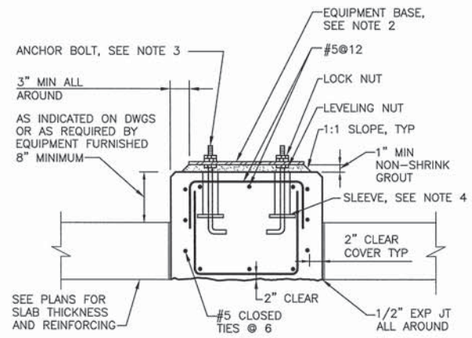

NOTES:

1. PROVIDE PAD UNDER ELECTRICAL AND MECHANICAL EQUIPMENT WEIGHING MORE THAN 5000 POUNDS, SUPPORTED ON GRADE, UNLESS NOTED OTHERWISE ON PLANS.
2. EQUIPMENT BASE DIMENSIONS SHALL BE AS INDICATED ON THE DRAWINGS OR AS DETERMINED BY THE EQUIPMENT MANUFACTURER AND APPROVED BY THE ENGINEER.
3. ANCHOR BOLTS AS RECOMMENDED BY THE EQUIPMENT MANUFACTURER. BOLTS SHALL BE HELD IN POSITION WITH A TEMPLATE WHILE EQUIPMENT BASE IS BEING CAST.
4. PIPE SLEEVES SHALL BE USED TO PROVIDE THE ANCHOR BOLT A MINIMUM MOVEMENT OF 1/2" IN ALL DIRECTIONS. MINIMUM SLEEVE LENGTH SHALL BE 8 TIMES THE BOLT DIAMETER. SLEEVES SHALL BE FILLED WITH NON-SHRINK GROUT. PIPE SLEEVES SHALL HAVE A MINIMUM INTERNAL DIAMETER 1" GREATER THAN BOLT DIAMETER AND A MAXIMUM INTERNAL DIAMETER OF 3" GREATER THAN BOLT DIAMETER. SLEEVE LENGTH SHALL BE 4" FOR 7/8" DIA AB AND SMALLER, 6" FOR 1" TO 1-3/8" AB, 12" FOR 1-1/2" AB.
5. EQUIPMENT BASES SHALL BE INSTALLED LEVEL. TOLERANCE IS 1/16".

ISOLATED EQUIPMENT BASE

5 —

NTS

WATERSTOP

2 —

NTS

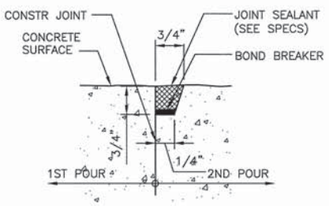

1. DO NOT APPLY BOND BREAKER TO SEALANT GROOVE. BOND BREAKER SHALL BE APPLIED NEATLY TO THE BOTTOM OF GROOVE ONLY.
2. BOND BREAKER TAPE SHALL NOT BE USED EXCEPT FOR SLIP DOWEL JOINTS.
3. ALL JOINTS OF HYDRAULIC STRUCTURES RETAINING WATER SHALL HAVE A SEALANT GROOVE.

TYPICAL SEALANT GROOVE

6 —

NTS

CONCRETE BEAM CONSTRUCTION JOINT

3 —

NTS

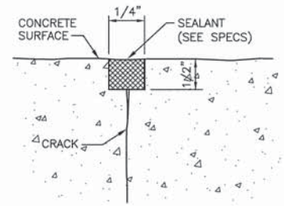

NOTES:

1. ENLARGE CRACK AT CONCRETE SURFACE AS SHOWN AND APPLY JOINT SEALANT.
2. ALL CRACKS IN WATER RETAINING STRUCTURE MUST BE REPAIRED PRIOR TO FILLING.
3. WIDEN CRACK SHALL BE 1/8" MINIMUM EACH SIDE OF THE CRACK CENTERLINE.

CONCRETE CRACK REPAIR

7 —

NTS

FILE: 215786-00S06.dwg
DATE: Jun 30, 2015-8:34:55am, jwebb

HDR Engineering, Inc.

ISSUE	DATE	DESCRIPTION
A	JUNE 2015	ISSUED FOR BID

PROJECT MANAGER	C. OLSON
DESIGNED	O. TAVANGAR
DESIGNED	
CHECKED	O. TAVANGAR
DRAWN	D. ELDREDGE
DATE	JUNE 30, 2015
PROJECT NUMBER	215786

REGISTERED PROFESSIONAL ENGINEER
OMID TAVANGAR
NO. 54655
EXP. 12/31/15
CIVIL
STATE OF CALIFORNIA
6/30/15

CITY OF PINOLE CALIFORNIA 1903

PINOLE/HERCULES
WATER POLLUTION
CONTROL PLANT UPGRADE
CLIENT PN

STRUCTURAL

TYPICAL CONCRETE DETAILS - II

0 1" 2"

FILENAME	215786-00S06
SCALE	NTS

SHEET **00S06**

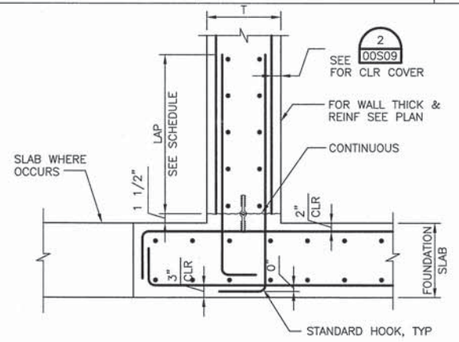

WALL HORIZONTAL CONSTRUCTION JOINT WITHOUT SHEAR KEY

1 — NTS

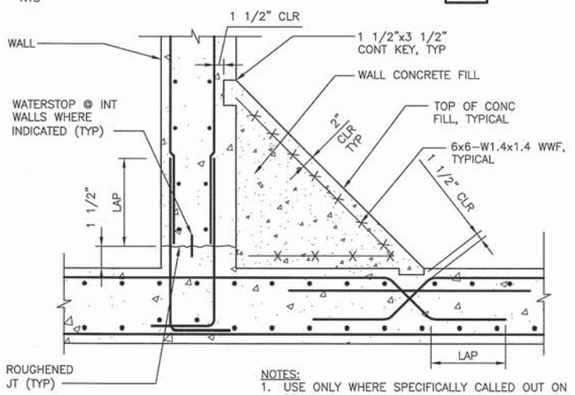

NOTES:
1. USE ONLY WHERE SPECIFICALLY CALLED OUT ON DRAWING.
2. REINFORCE CONCRETE FILL AS SHOWN WHERE CONCRETE FILL THICKNESS EXCEEDS 4".

CONCRETE FILL REINFORCING

5 — NTS

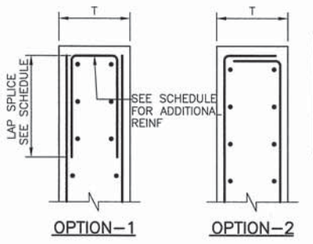

T	ADDITIONAL REINFORCEMENT
T ≤ 1'–6"	#4 U TO MATCH SPACING OF VERTICALS
T > 1'–6"	#5 U TO MATCH SPACING OF VERTICALS

NOTES:
1. FOR TYPICAL REINFORCMENT, SEE PLAN SHEETS.
2. TERMINATE TYPICAL REIFORCEMENT WITH END HOOK (OPTION–2) OR ADDITIONAL U BARS (OPTION–1).
3. THIS DETAIL TO BE USED ONLY WHEN A SPECIAL DETAIL IS NOT PROVIDED ON PLAN SHEETS.

TOP OR END OF WALL REINFORCEMENT W/ "T" ≥ 1'–0"

9 — NTS

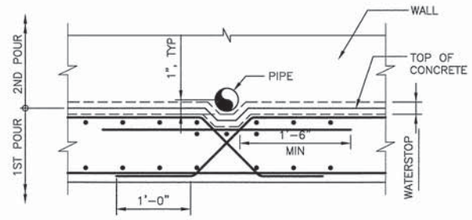

NOTES:
1. WALL REINFORCEMENT NOT SHOWN FOR CLARITY.
2. FOR ALL REINFORCEMENT SEE PLANS.

WALL HORIZ CONST JOINT JOINT AT PIPE INTERFERENCE

2 — NTS

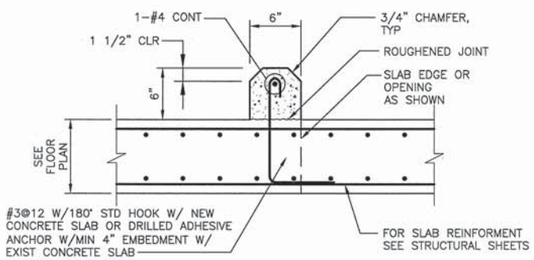

CONCRETE CURB

6 — NTS

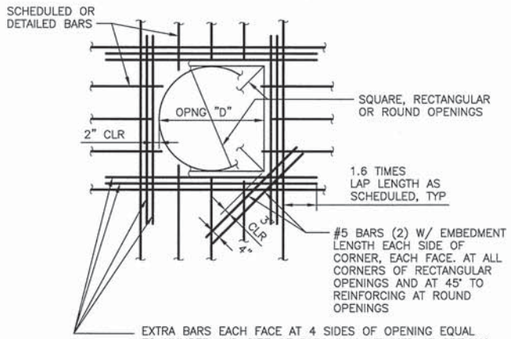

NOTES:
1. THIS DETAIL IS APPLICABLE ONLY TO WALLS OR SLABS WITH THICKNESS 36" OR LESS. FOR CONDITIONS AT THICKER CONCRETE, SEE PLANS AND DETAILS.
2. UNLESS SHOWN OTHERWISE ON DRAWINGS, PROVIDE EXTRA BARS AROUND OPENINGS IN WALLS, FLOORS, AND ROOFS AS SHOWN.
3. EVERY BAR DISCONTINUED AT AN OPENING SHALL BE REPLACED IN KIND BY ONE EXTRA BAR PLACED AT ONE SIDE OF THE OPENING AS SHOWN ABOVE.
4. FOR OPENINGS 8" OR LESS IN SLABS AND WALLS, NO EXTRA BARS ARE REQUIRED UNLESS OTHERWISE NOTED. SCHEDULED REBARS SHALL BE RESPACED (NOT CUT) TO ALLOW FOR UNIMPAIRED OPENINGS.

REINFORCING AT RECTANGULAR/CIRCULAR OPENINGS

10 — NTS

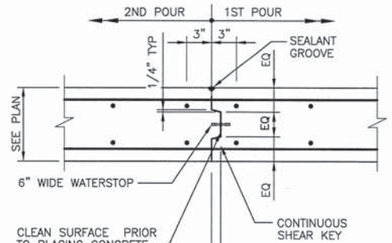

NOTE:

CONTRACTOR TO SUBMIT PROPOSED CONSTRUCTION JOINT LAYOUT (IF DIFFERENT FROM SHOWN ON FLOOR PLAN), FOR REVIEW AND APPROVAL OF THE ENGINEER OF RECORD PRIOR TO PLACING CONCRETE.

WALL VERT CONST JOINT

3 — NTS

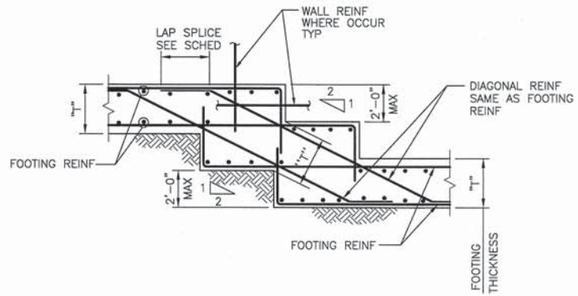

NOTE:

1. FOR FOOTING REINFORCEMENT AND FOOTING SIZE, SEE FOUNDATION PLAN, SECTIONS AND SCHEDULE.

STEPPED FOOTING

7 — NTS

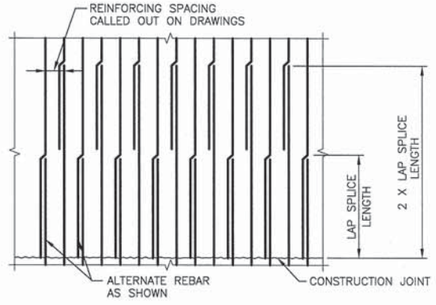

WALL VERTICAL REINFORCING AT CONSTRUCTION JOINT

11 — NTS

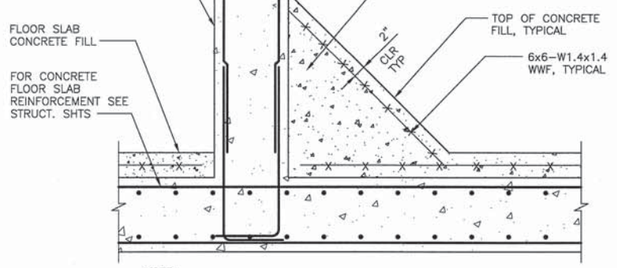

NOTE:

REINFORCE CONCRETE FILL AS SHOWN WHERE CONCRETE FILL THICKNESS EXCEEDS 4".

CONCRETE FILL REINFORCING

4 — NTS

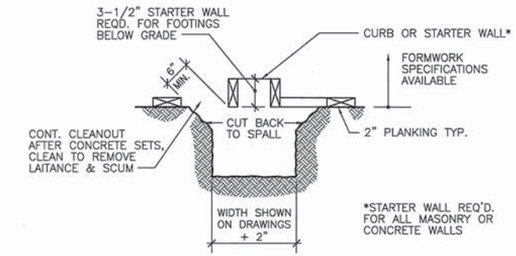

FOUNDATION CONCRETE MAY BE PLACED DIRECTLY INTO NEAT EXCAVATIONS PROVIDED THE FOUNDATION TRENCH WALLS ARE STABLE, SUBJECT TO THE APPROVAL OF THE ENGINEER. IN SUCH CASE, THE MINIMUM FORMWORK SHOWN IN THIS DETAIL IS MANDATORY TO INSURE CLEAN EXCAVATIONS PRIOR TO AND DURING THE PLACING OF CONCRETE.

FORMWORK IS NOT PERMITTED BELOW GRADE UNLESS FOUNDATION IS FULLY FORMED. STAKES ARE NOT PERMITTED WITHIN THE FOOTING SECTION.

MINIMUM FORMWORK REQUIREMENTS

8 — NTS

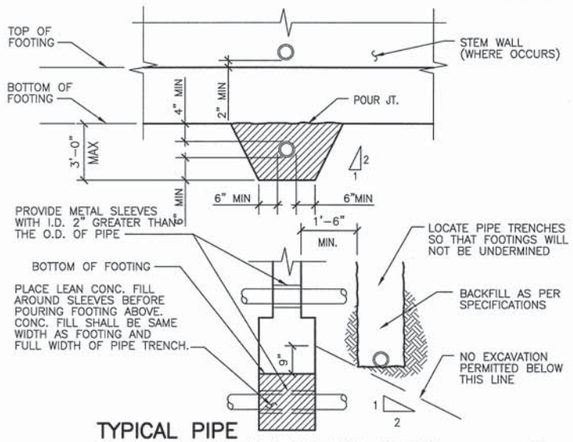

TYPICAL PIPE TRENCH UNDER FOOTING DETAIL

12 — NTS

FILE: 215786–00S07.dwg
DATE: Jun 30, 2015–10:18:35am, rvallesp

HDR Engineering, Inc.

ISSUE	DATE	DESCRIPTION
A	JUNE 2015	ISSUED FOR BID

PROJECT MANAGER	C. OLSON
DESIGNED	O. TAVANGAR
DESIGNED	
CHECKED	O. TAVANGAR
DRAWN	D. ELDREDGE
DATE	JUNE 30, 2015
PROJECT NUMBER	215786

REGISTERED PROFESSIONAL ENGINEER — OMID TAVANGAR — NO. 54655 EXP. 12/31/15 — CIVIL — STATE OF CALIFORNIA — 6/30/15

CITY OF PINOLE CALIFORNIA 1903

PINOLE/HERCULES WATER POLLUTION CONTROL PLANT UPGRADE CLIENT PN

STRUCTURAL

TYPICAL CONCRETE DETAILS - III

0 1" 2"

FILENAME	215786–00S07
SCALE	NTS

SHEET 00S07

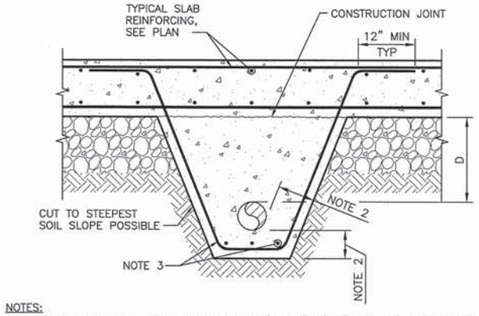

NOTES:
1. USE FOR ALL UNDER SLAB PIPES WITH D(DEPTH)≤3'–0". SEE 2/– FOR PIPES AT D(DEPTH)>3'–0".
2. SEE SECTION FOR DIMENSIONS. 6" MIN CLEAR COVER FOR PIPE DIA<24" AND 8" MIN CLEAR COVER FOR PIPE DIA>=24".
3. #4@12" EACH WAY FOR PIPE DIA<24" AND #5@12" EACH WAY FOR PIPE DIA>=24".

PIPE OR CONDUIT ENCASEMENT D<3'–0"

SCALE: NTS

1 / –

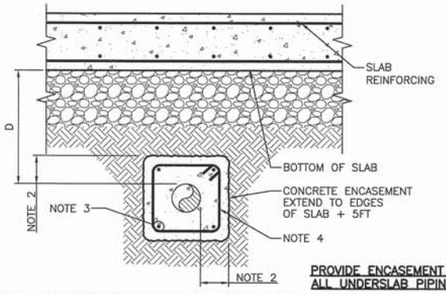

PROVIDE ENCASEMENT FOR ALL UNDERSLAB PIPING

NOTES:
1. USE FOR ALL UNDERSLAB PIPES WITH D(DEPTH)>3'–0" SEE 1/– FOR PIPES D(DEPTH)≤3'–0".
2. SEE SECTION FOR DIMENSIONS. 6" MIN CLEAR COVER FOR PIPE DIA<2'–0" AND 8" MIN CLEAR COVER FOR PIPE DIA>=2'–0".
3. 4–#4 FOR PIPE DIA<12", 4–#5 FOR PIPE DIA BETWEEN 12" AND 24", #5@12" FOR PIPE DIA>=24".
4. #3 STIRRUPS @12" FOR PIPE DIA<24", #4 STIRRUPS FOR PIPE DIA>=24".

PIPE OR CONDUIT ENCASEMENT D>3'–0"

SCALE: NTS

2 / –

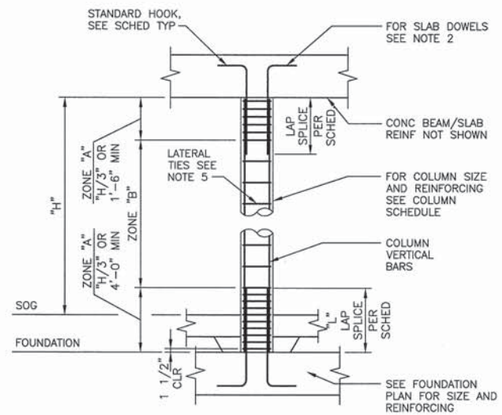

TYPICAL COLUMN DETAIL

CONCRETE COLUMN SCHEDULE			
LATERAL TIES ZONE B	#4@6"	#4@6"	#4@6"
LATERAL TIES ZONE A	#4@6"	#4@6"	#4@6"
VERTICAL BARS	8–#7	12–#6	20–#8
COLUMN SIZE	18"X18"	24"X24"	24"X24"
DETAIL (COLUMN TYPE)	A / –	B / –	C / –
MARK	32C–1	61C–1	61C–2

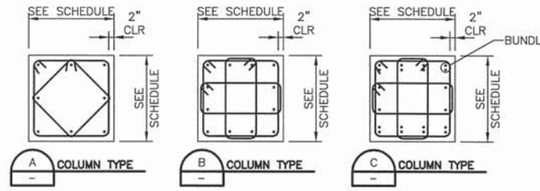

NOTES:
1. ALL FOOTING DOWELS SHALL MATCH COLUMN VERTICAL REINF. UNO.
2. SLAB DOWELS SHALL MATCH COLUMN VERTICAL REINF.
3. CONCRETE STRENGTH f'c=4 KSI
4. "d" = BAR DIAMETER
5. SEE COLUMN SCHEDULE FOR TIE SPACING
6. SEE DETAILS FOR ADDITIONAL INFORMATION

CONCRETE COLUMN REINFORCING SCHEDULE AND DETAILS

SCALE: NTS

3 / –

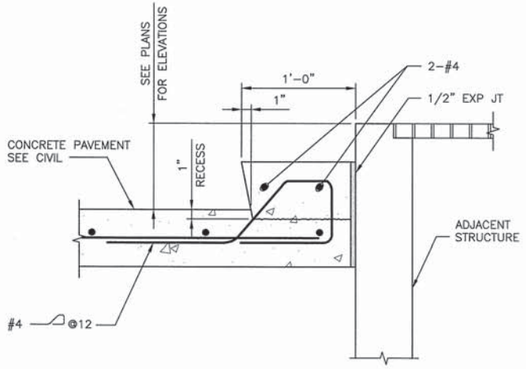

CONCRETE STAIR

SCALE: NTS

4 / 00S08

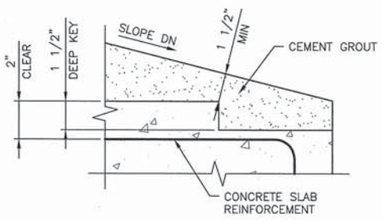

CEMENT GROUT KEY – AT CONCRETE SLAB

SCALE: NTS

5 / 00S08

FILE: 215786–00S08.dwg
DATE: Jun 30, 2015–8:35:04am, jwebb

HDR Engineering, Inc.

ISSUE	DATE	DESCRIPTION
A	JUNE 2015	ISSUED FOR BID

PROJECT MANAGER	C. OLSON
DESIGNED	M. RAMANATHAN
DESIGNED	
CHECKED	C. OLSON
DRAWN	D. ELDREDGE
DATE	JUNE 30, 2015
PROJECT NUMBER	215786

REGISTERED PROFESSIONAL ENGINEER OMETH TAVANGAR NO. 54655 EXP. 12/31/15 CIVIL STATE OF CALIFORNIA 6/30/15

CITY OF PINOLE CALIFORNIA 1903

PINOLE/HERCULES
WATER POLLUTION
CONTROL PLANT UPGRADE
CLIENT PN

STRUCTURAL

TYPICAL CONCRETE DETAILS - IV

0 1" 2"

FILENAME	215786–00S08
SCALE	AS NOTED

SHEET **00S08**

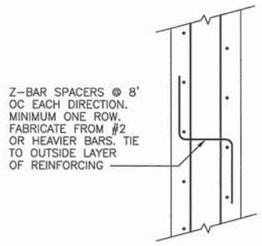

SPACER FOR WALL REINFORCEMENT (1)
NTS

LOCATION	* MINIMUM COVER
UNFORMED SURFACES ADJACENT TO EARTH	3"
FORMED OR TOP SURFACES EXPOSED TO WEATHER OR SATURATED AIR, SUBMERGED OR IN CONTACT WITH EARTH:	2"
OTHER LOCATIONS:	
BARS IN BEAMS OR GIRDERS, INCLUDING STIRRUPS AND COLUMN SPIRALS OR TIES	1 1/2"
SLABS, WALLS AND JOINTS	
#9 AND LARGER	BAR DIA + 1/4"
#8 AND SMALLER	1 1/2"

* COVER FOR REINFORCING STEEL SHALL NOT BE LESS THAN THE MINIMUM GIVEN ABOVE (NO MINUS TOLERANCE) , AND SHALL NOT EXCEED THE MINIMUM BY MORE THAN 1/4 INCH WHERE THE CONCRETE THICKNESS IS 24" OR LESS, OR MORE THAN 1/2 INCH WHERE THE CONCRETE THICKNESS IS MORE THAN 24 INCHES.

REINFORCEMENT CONCRETE COVER (2)
NTS

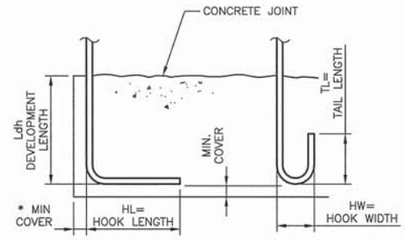

90° STD HOOK 180° STD HOOK

BAR SIZE GRADE 60	f'c=4000 psi & 4500 psi				f'c=5000 psi
	Ldh *	HL	HW	TL	Ldh *
#3	6"	6"	3"	3"	6"
#4	7"	8"	4"	4 1/2"	6"
#5	9"	10"	5"	5"	8"
#6	10"	1'-0"	6"	6"	9"
#7	1'-0"	1'-2"	7"	7"	11"
#8	1'-2"	1'-4"	8"	8"	1'-0"
#9	1'-3"	1'-7"	11 3/4"	10 1/2"	1'-2"
#10	1'-5"	1'-10"	1'-1 1/4"	11 1/2"	1'-3"
#11	1'-7"	2'-0"	1'-2 3/4"	1'-1"	1'-5"

* COMPLYING WITH MINIMUM COVER REQUIREMENTS OF ACI 318, 12.5.3.2. OTHERWISE Ldh MUST BE RE-CALCULATED.

REINFORCING HOOK SCHEDULE (3)
NTS

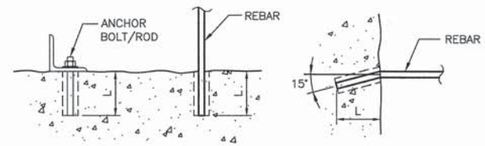

VERTICAL APPLICATION HORIZONTAL APPLICATION

ADHESIVE ANCHOR SCHEDULE			
REINFORCING BARS		ANCHOR BOLTS/RODS	
BAR SIZE	EMBED LENGTH (L)	DIA (IN)	EMBED LENGTH (L)
#3	4"	3/8"	5"
#4	5"	1/2"	6"
#5	6"	5/8"	7"
#6	7"	3/4"	8"
#7	8"	7/8"	9"
#8	9"	1"	10"
#9	10"		
#10	12"		

NOTES:
1. EPOXY TYPE IS SUBJECT TO APPROVAL OF THE ENGINEER OF RECORD.
2. EMBEDMENT LENGTHS SHOWN ARE MINIMUM. PROVIDE MANUFACTURER'S RECOMMENDATIONS FOR INSTALLATION.

ADHESIVE ANCHOR DETAILS & SCHEDULE (4)
NTS

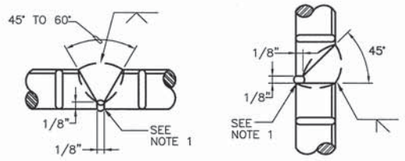

HORIZONTAL POSITION – A VERTICAL POSITION – B

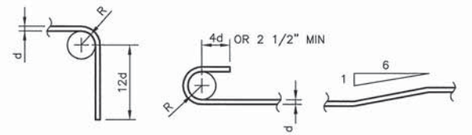

90° BEND 180° BEND MAX OFFSET BEND

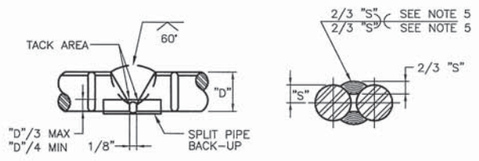

HORIZONTAL AND VERTICAL POSITION – C HORIZONTAL AND VERTICAL POSITION – D

NOTES:
1. CHIP, GRIND, OR GOUGE TO SOUND METAL BEFORE WELDING OTHER SIDE.
2. USE DETAIL A & B FOR #9 & LARGER BARS. USE DETAIL C FOR #8 & SMALLER BARS. USE DETAIL D FOR #6 & SMALLER BARS.
3. E 90 ELECTRODE FOR GRADE 60.
4. SEE AWS D1.4 FOR WELDING PROCESS, PREHEAT REQUIREMENTS, AND OTHER DETAILS. SUBMIT WELDING PROCEDURE PER AWS.
5. 1 1/2" FOR #3 AND #4 BARS; 2" FOR #5 BARS; AND 2 1/2" FOR #6 BARS.

WELDED SPLICE OF REINFORCING BARS (5)
NTS

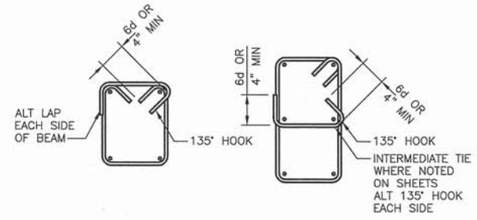

TYP. STIRRUP TYP. COLUMN TIE OR CLOSED STIRRUP

BAR SIZE	R
#3 TIES & STIRRUPS	2d
#4–#8	3d
#9–#11	4d
#14–#18	5d

TYPICAL STIRRUPS & TIES (6)
NTS

MINIMUM LAP SPLICE LENGTHS f'c = 4000 psi & 4500 psi, fy = 60.0 ksi					
BAR	* MIN BAR SPACING	LAPS FOR BARS SPACED GREATER THAN MIN BAR SPACING		LAPS FOR BARS SPACED CLOSER THAN MIN BAR SPACING	
		VERTICAL	OTHER	VERTICAL	OTHER
#3	3"	1'-4"	1'-6"	1'-4"	1'-6"
#4	3"	1'-7"	2'-0"	1'-8"	2'-2"
#5	3"	1'-11"	2'-6"	2'-7"	3'-4"
#6	4"	2'-4"	3'-0"	3'-8"	4'-9"
#7	4"	3'-6"	4'-6"	4'-11"	6'-5"
#8	4"	4'-7"	5'-11"	6'-6"	8'-6"
#9	4 1/2"	5'-9"	7'-6"	8'-3"	10'-9"
#10	5"	7'-4"	9'-6"	10'-6"	13'-7"
#11	5 5/8"	9'-0"	11'-8"	12'-10"	16'-8"

NOTES:
1. ALL REBAR SPLICE LENGTHS SHALL BE AS SHOWN UNDER HEADING "VERTICAL" EXCEPT IF SPLICED BARS ARE HORIZONTAL BARS WITH 12" OR MORE CONCRETE BELOW. THEN SPLICE LENGTH SHALL BE AS SHOWN UNDER HEADING "OTHER".
2. AT SPLICES THE BAR SPACING IS THE CENTER TO CENTER DISTANCE BETWEEN ADJACENT REBARS.
3. ALL SPLICES SHALL BE CONTACT SPLICES AND WIRED TOGETHER.
4. NO WELDED OR MECHANICAL SPLICES ARE PERMITTED UNLESS INDICATED OTHERWISE.
5. UNLESS OTHERWISE SHOWN, SPLICES FOR BOTTOM REINFORCING BARS IN BEAMS AND SLABS SHALL BE CENTERED OVER THE SUPPORTS. SPLICES FOR TOP REINFORCING BARS SHALL BE LOCATED ON CENTERLINE OF SPAN.
6. FOR HOOP REINFORCEMENT IN ROUND CONCRETE WALLS, USE TRIPLE STAGGERED LAP SPLICES AS SHOWN IN THIS DETAIL.

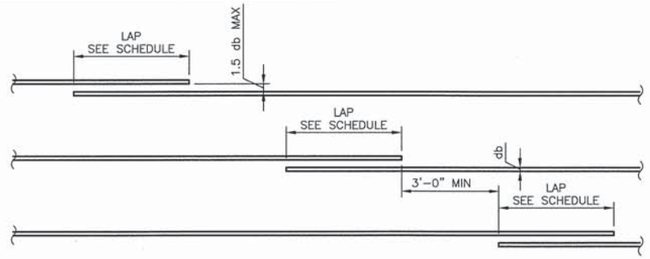

CONCRETE REINFORCING LAP SPLICE SCHEDULE (7)
NO SCALE

FILE: 215786-00S09.dwg
DATE: Jun 30, 2015-8:35:07am, jwebb

HDR Engineering, Inc.

ISSUE	DATE	DESCRIPTION
A	JUNE 2015	ISSUED FOR BID

PROJECT MANAGER	C. OLSON
DESIGNED	M. RAMANATHAN
DESIGNED	
CHECKED	C. OLSON
DRAWN	D. ELDREDGE
DATE	JUNE 30, 2015
PROJECT NUMBER	215786

REGISTERED PROFESSIONAL ENGINEER — OMID TAVANGAR — NO. 54655 EXP. 12/31/15 — CIVIL — STATE OF CALIFORNIA — 6/30/15

CITY OF PINOLE CALIFORNIA 1903

PINOLE/HERCULES WATER POLLUTION CONTROL PLANT UPGRADE CLIENT PN

STRUCTURAL

TYPICAL CONCRETE REINFORCING DETAILS

0 1" 2"

FILENAME	215786-00S09
SCALE	AS NOTED

SHEET 00S09

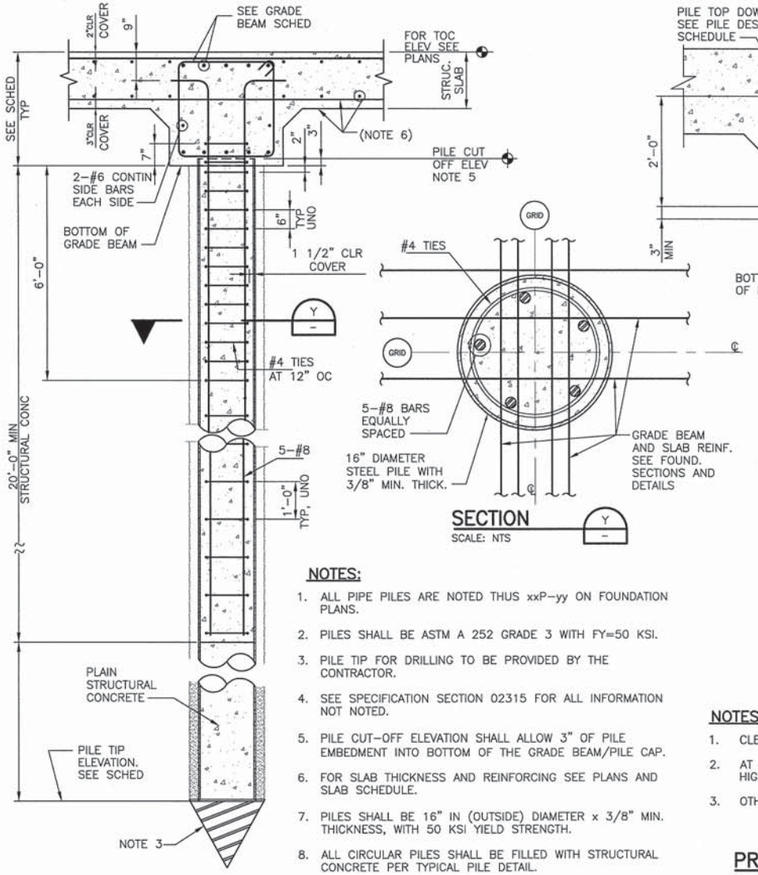

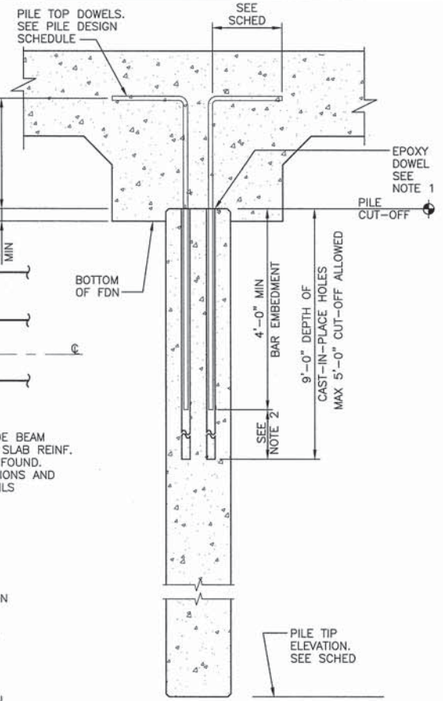

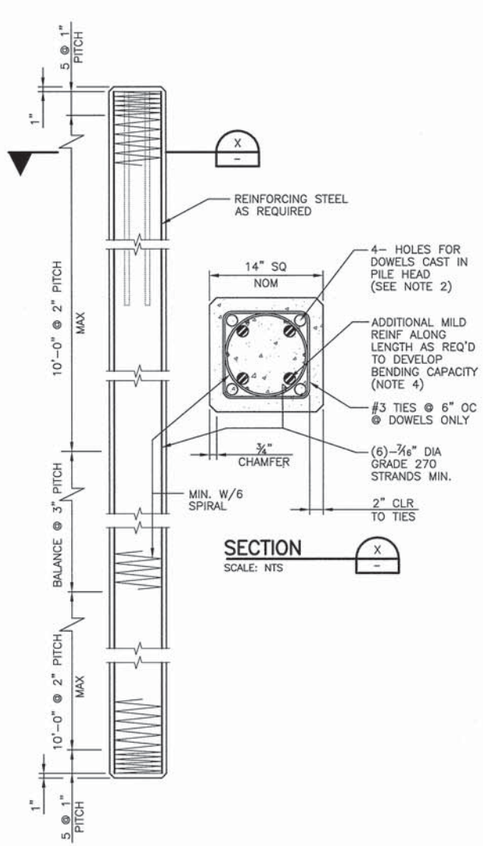

NOTES:

1. ALL PIPE PILES ARE NOTED THUS xxP–yy ON FOUNDATION PLANS.
2. PILES SHALL BE ASTM A 252 GRADE 3 WITH FY=50 KSI.
3. PILE TIP FOR DRILLING TO BE PROVIDED BY THE CONTRACTOR.
4. SEE SPECIFICATION SECTION 02315 FOR ALL INFORMATION NOT NOTED.
5. PILE CUT–OFF ELEVATION SHALL ALLOW 3" OF PILE EMBEDMENT INTO BOTTOM OF THE GRADE BEAM/PILE CAP.
6. FOR SLAB THICKNESS AND REINFORCING SEE PLANS AND SLAB SCHEDULE.
7. PILES SHALL BE 16" IN (OUTSIDE) DIAMETER x 3/8" MIN. THICKNESS, WITH 50 KSI YIELD STRENGTH.
8. ALL CIRCULAR PILES SHALL BE FILLED WITH STRUCTURAL CONCRETE PER TYPICAL PILE DETAIL.
9. SEE PLANS FOR ALL TOP OF CONCRETE ELEVATIONS.

PRECAST PRESTRESSED PILE (2)

SCALE: NTS

NOTES:

1. CLEAN HOLES THOROUGHLY PRIOR TO GROUTING.
2. AT CONTRACTORS OPTION, EPOXY COULD BE REPLACED WITH HIGH STRENGTH CEMENTITIOUS GROUT WITHIN THIS REACH.
3. OTHER REINFORCED NOT SHOWN FOR CLARITY. SEE DETAIL 1.

TORQUE–DOWN TUBEX GROUT INJECTION STEEL PILES (1)

SCALE: NTS

NOTES:

1. REINFORCEMENT SHOWN IS A MINIMUM, SEE PILE DESIGN NOTE 1.
2. COORDINATE HOLE DIAM. WITH SIZE OF MILD STEEL PER PILE DESIGN SCHEDULE. FOR DOWEL SIZE, SEE PILE DESIGN SCHEDULE.
3. SEE SPECIFICATION SECTION 02317 FOR ALL INFORMATION NOT NOTED.
4. MILD STEEL SHALL BE DESIGNED BY PILE MANUF.

PRESTRESSED PILE REINFORCING DETAIL (3)

SCALE: NTS

PILE DESIGN SCHEDULE				
ITEMS	GRIT REMOVAL	ELECTRICAL BUILDING GENERATOR PAD	SOLIDS HANDLING	ALL CHEMICAL STORAGES AND EFFLUENT SURGE TANK
AXIAL COMPRESSION	80 kips	60 kips	80 kips	55 kips
AXIAL TENSION	25 kips	20 kips	20 kips	20 kips
NEGATIVE MOMENT @ BOTTOM OF PILE CAP	100 k–ft	50 k–ft	50 k–ft	0 k–ft
POSITIVE MOMENT @ "X" BELOW BOTTOM OF PILE CAP	75 k–ft @ X=13 ft	55 k–ft @ X=6 ft	45 k–ft @ X=6 ft	55 k–ft @ X=6 ft
SHEAR	24 kips	8 kips	16 kips	20 kips
PILE TOP DOWELS	4–# 10	4–# 9	5–# 8	4–# 9
PILE TYPE	14 INCH SQ. PRESTRESSED CONCRETE	14 INCH SQ. PRESTRESSED CONCRETE	16 INCH ϕ "TUBEX" STEEL PILE	14 INCH SQ. PRESTRESSED CONCRETE
CONC. STRENGTH fc'	7000 psi	7000 psi	4000 psi	7000 psi

PILE DESIGN SCHEDULE NOTES:

1. CONTRACTOR TO FURNISH, DESIGN, DETAIL AND INSTALL PILES IN CONFORMANCE WITH THE REQUIREMENTS OF SECTION 02317 AND THESE DRAWINGS. DESIGN CALCULATIONS MUST BE PREPARED SIGNED, AND STAMPED BY A REGISTERED CIVIL OR STRUCTURAL ENGINEER LICENSED IN THE STATE OF CALIFORNIA AND MUST BE SUBMITTED WITH SHOP DRAWINGS REQUIRED BY SECTION 02317.
2. PILE DESIGN CRITERIA:
   - A. PILE DESIGN BASED ON SUBSURFACE GEOTECHNICAL EVALUATION FOR PINOLE/HERCULIES WATER POLLUTION CONTROL PLANT UPGRADE, DATED MARCH 11, 2014.
   - A. PILES TO BE EITHER 14" SQUARE PRECAST PRESTRESSED DRIVEN, AND 16" DIAMETER "TUBEX" GROUT INJECTION TORQUE–DOWN STEEL PILES AS NOTED IN SCHEDULE.
   - B. PILES SHALL CONFORM TO THE REQUIREMENTS OF SECTION 1810 OF THE 2013 CALIFORNIA BUILDING CODE.
   - C. CONCRETE FOR PRESTRESSED PILES SHALL TEST NOT LESS THAN 7,000 PSI AT 28 DAYS. NO PILES SHALL BE DRIVEN WITH LESS THAN 28 DAY AGE.
   - D. CONCRETE FOR "TUBEX" STEEL PILES SHALL NOT TEST LESS THAN 4,000 PSI AT 28 DAYS
   - E. PRESTRESSING STEEL: ASTM A–416 GRADE 270.
   - F. MILD REINFORCING STEEL: ASTM A–615 GRADE 60.
   - G. PILE DESIGN IS BASED ON FIXED HEAD CONDITION WITH 1/4" LATERAL DISPLACEMENT AT TOP. FOR MINIMUM REQUIRED PILE CAPACITIES (WORKING LOADS) SEE PILE DESIGN SCHEDULE.
   - H. PILES SHALL BE DESIGNED FOR AXIAL COMPRESSION COMBINED WITH LATERAL LOADS SHOWN IN THE PILE DESIGN SCHEDULE. PROVIDE MILD STEEL REINFORCING TO MEET MINIMUM STEEL REQUIREMENTS AND/OR RESIST BENDING MOMENTS AS REQUIRED.
   - I. ALL FORCES AND BENDING MOMENTS SHOWN IN SCHEDULE ARE SERVICE LEVEL.
3. SEE SPEC FOR REQUIRED SUBMITTAL TESTING AND DRIVING REQUIREMENTS.
4. THE GEOTECHNICAL ENGINEER SHALL VISUALLY OBSERVE ALL PILE INSTALLATION OPERATIONS, AND REVIEW THE CONTRACTORS DRIVING EQUIPMENT, HAMMER ENERGY AND DRIVING LOGS FOR EACH PILE.

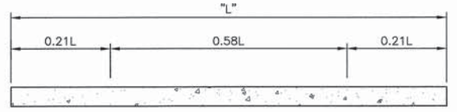

NOTES

1. PICK UP POINTS TO BE SHOWN ON PILE.

PRESTRESSED PILE HANDLING DETAIL (4)

SCALE: NTS

PILE SCHEDULE			
SEQ. NO.	PILE I.D.	PILE TIP ELEVATION	LOCATION
1	13P–1	72.0'	GRIT CHAMBER
2	13P–2	72.0'	GRIT CHAMBER
3	13P–3	72.0'	GRIT CHAMBER
4	13P–4	72.0'	GRIT CHAMBER
5	13P–5	72.0'	GRIT CHAMBER
6	13P–6	72.0'	GRIT CHAMBER
7	13P–7	72.0'	GRIT CHAMBER
8	13P–8	72.0'	GRIT CHAMBER
9	13P–9	72.0'	GRIT CHAMBER
10	13P–10	72.0'	GRIT CHAMBER
11	13P–11	72.0'	GRIT CHAMBER
12	13P–12	72.0'	GRIT CHAMBER
13	13P–13	72.0'	GRIT CHAMBER
14	13P–14	72.0'	GRIT CHAMBER
15	13P–15	72.0'	GRIT CHAMBER
16	13P–16	72.0'	GRIT CHAMBER
17	13P–17	72.0'	GRIT CHAMBER
18	13P–18	72.0'	GRIT CHAMBER
19	13P–19	72.0'	GRIT CHAMBER
20	13P–20	72.0'	GRIT CHAMBER
21	13P–21	72.0'	GRIT CHAMBER
22	13P–22	72.0'	GRIT CHAMBER
23	13P–23	70.0'	GRIT CHAMBER
24	13P–24	70.0'	GRIT CHAMBER
25	13P–25	70.0'	GRIT CHAMBER
26	13P–26	70.0'	GRIT CHAMBER
27	13P–27	70.0'	GRIT CHAMBER
28	13P–28	70.0'	GRIT CHAMBER
29	13P–29	72.0'	GRIT CHAMBER
30	13P–30	72.0'	GRIT CHAMBER
31	13P–31	72.0'	GRIT CHAMBER
32	13P–32	72.0'	GRIT CHAMBER
33	13P–33	72.0'	GRIT CHAMBER
34	13P–34	72.0'	GRIT CHAMBER
35	13P–35	72.0'	GRIT CHAMBER
36	13P–36	72.0'	GRIT CHAMBER
37	13P–37	72.0'	GRIT CHAMBER
38	13P–38	72.0'	GRIT CHAMBER
39	13P–39	72.0'	GRIT CHAMBER
40	13P–40	72.0'	GRIT CHAMBER
41	13P–41	72.0'	GRIT CHAMBER
42	13P–42	72.0'	GRIT CHAMBER
43	13P–43	72.0'	GRIT CHAMBER
44	13P–44	72.0'	GRIT CHAMBER
45	13P–45	72.0'	GRIT CHAMBER
46	13P–46	72.0'	GRIT CHAMBER
47	13P–47	72.0'	GRIT CHAMBER
48	13P–48	72.0'	GRIT CHAMBER
49	13P–49	72.0'	GRIT CHAMBER
50	13P–50	72.0'	GRIT CHAMBER
51	13P–51	72.0'	GRIT CHAMBER
52	13P–52	72.0'	GRIT CHAMBER
53	13P–53	72.0'	GRIT CHAMBER
54	**13P–54**	**72.0'**	**GRIT CHAMBER**
55	13P–55	72.0'	GRIT CHAMBER
56	13P–56	72.0'	GRIT CHAMBER
57	13P–57	72.0'	GRIT CHAMBER
58	13P–58	72.0'	GRIT CHAMBER
59	13P–59	72.0'	GRIT CHAMBER
60	13P–60	72.0'	GRIT CHAMBER
61	13P–61	72.0'	GRIT CHAMBER
62	13P–62	72.0'	GRIT CHAMBER
63	14P–1	77.0'	ELECTRICAL/MAINTENANCE BUILDING
64	14P–2	77.0'	ELECTRICAL/MAINTENANCE BUILDING
65	14P–3	77.0'	ELECTRICAL/MAINTENANCE BUILDING
66	14P–4	77.0'	ELECTRICAL/MAINTENANCE BUILDING
67	14P–5	77.0'	ELECTRICAL/MAINTENANCE BUILDING
68	14P–6	77.0'	ELECTRICAL/MAINTENANCE BUILDING

PILE SCHEDULE (CONTINUED)			
SEQ. NO.	PILE I.D.	PILE TIP ELEVATION	LOCATION
69	14P–7	77.0'	ELECTRICAL/MAINTENANCE BUILDING
70	14P–8	77.0'	ELECTRICAL/MAINTENANCE BUILDING
71	14P–9	77.0'	ELECTRICAL/MAINTENANCE BUILDING
72	14P–10	77.0'	ELECTRICAL/MAINTENANCE BUILDING
73	14P–11	77.0'	ELECTRICAL/MAINTENANCE BUILDING
74	14P–12	77.0'	ELECTRICAL/MAINTENANCE BUILDING
75	14P–13	77.0'	ELECTRICAL/MAINTENANCE BUILDING
76	14P–14	77.0'	ELECTRICAL/MAINTENANCE BUILDING
77	14P–15	77.0'	ELECTRICAL/MAINTENANCE BUILDING
78	14P–16	77.0'	GENERATOR PAD
79	**14P–17**	**77.0'**	**GENERATOR PAD**
80	14P–18	77.0'	GENERATOR PAD
81	14P–19	77.0'	GENERATOR PAD
82	14P–20	77.0'	GENERATOR PAD
83	14P–21	77.0'	GENERATOR PAD
84	14P–22	77.0'	GENERATOR PAD
85	14P–23	77.0'	GENERATOR PAD
86	14P–24	77.0'	GENERATOR PAD
87	14P–25	77.0'	GENERATOR PAD
88	61P–1	68.0'	SOLIDS HANDLING BUILDING
89	61P–2	68.0'	SOLIDS HANDLING BUILDING
90	61P–3	68.0'	SOLIDS HANDLING BUILDING
91	61P–4	68.0'	SOLIDS HANDLING BUILDING
92	61P–5	68.0'	SOLIDS HANDLING BUILDING
93	61P–6	68.0'	SOLIDS HANDLING BUILDING
94	61P–7	68.0'	SOLIDS HANDLING BUILDING
95	61P–8	68.0'	SOLIDS HANDLING BUILDING
96	61P–9	68.0'	SOLIDS HANDLING BUILDING
97	61P–10	68.0'	SOLIDS HANDLING BUILDING
98	61P–11	68.0'	SOLIDS HANDLING BUILDING
99	61P–12	68.0'	SOLIDS HANDLING BUILDING
100	61P–13	68.0'	SOLIDS HANDLING BUILDING
101	61P–14	68.0'	SOLIDS HANDLING BUILDING
102	61P–15	68.0'	SOLIDS HANDLING BUILDING
103	61P–16	68.0'	SOLIDS HANDLING BUILDING
104	61P–17	68.0'	SOLIDS HANDLING BUILDING
105	61P–18	68.0'	SOLIDS HANDLING BUILDING
106	61P–19	68.0'	SOLIDS HANDLING BUILDING
107	61P–20	68.0'	SOLIDS HANDLING BUILDING
108	61P–21	68.0'	SOLIDS HANDLING BUILDING
109	61P–22	68.0'	SOLIDS HANDLING BUILDING
110	61P–23	68.0'	SOLIDS HANDLING BUILDING
111	61P–24	68.0'	SOLIDS HANDLING BUILDING
112	61P–25	68.0'	SOLIDS HANDLING BUILDING
113	61P–26	68.0'	SOLIDS HANDLING BUILDING
114	61P–27	68.0'	SOLIDS HANDLING BUILDING
115	61P–28	68.0'	SOLIDS HANDLING BUILDING
116	61P–29	68.0'	SOLIDS HANDLING BUILDING
117	61P–30	68.0'	SOLIDS HANDLING BUILDING
118	61P–31	68.0'	SOLIDS HANDLING BUILDING
119	61P–32	68.0'	SOLIDS HANDLING BUILDING
120	61P–33	68.0'	SOLIDS HANDLING BUILDING
121	61P–34	68.0'	SOLIDS HANDLING BUILDING
122	61P–35	68.0'	SOLIDS HANDLING BUILDING
123	61P–36	68.0'	SOLIDS HANDLING BUILDING
124	61P–37	68.0'	SOLIDS HANDLING BUILDING
125	61P–38	68.0'	SOLIDS HANDLING BUILDING
126	61P–39	68.0'	SOLIDS HANDLING BUILDING
127	61P–40	68.0'	SOLIDS HANDLING BUILDING
128	61P–41	68.0'	SOLIDS HANDLING BUILDING
129	61P–42	68.0'	SOLIDS HANDLING BUILDING
130	61P–43	68.0'	SOLIDS HANDLING BUILDING
131	61P–44	68.0'	SOLIDS HANDLING BUILDING
132	61P–45	68.0'	SOLIDS HANDLING BUILDING
133	61P–46	68.0'	SOLIDS HANDLING BUILDING
134	61P–47	68.0'	SOLIDS HANDLING BUILDING

FOR CONTINUATION SEE SHEET 00S11

PILE SCHEDULE

FILE: 215786–00S10.dwg
DATE: Jun 30, 2015–8:35:11am, jwebb

HDR Engineering, Inc.

ISSUE	DATE	DESCRIPTION
A	JUNE 2015	ISSUED FOR BID

PROJECT MANAGER	C. OLSON
DESIGNED	M. RAMANATHAN
DESIGNED	
CHECKED	C. OLSON
DRAWN	D. ELDREDGE
DATE	JUNE 30, 2015
PROJECT NUMBER	215786

REGISTERED PROFESSIONAL ENGINEER — DAVID T. YAVANGAR — NO. 54655 EXP. 12/31/15 — CIVIL — STATE OF CALIFORNIA — 6/30/15

CITY OF PINOLE CALIFORNIA 1903

PINOLE/HERCULES WATER POLLUTION CONTROL PLANT UPGRADE
CLIENT PN

STRUCTURAL

TYPICAL PILE DETAILS AND SCHEDULE

0 1" 2"

FILENAME	215786–00S10
SCALE	AS NOTED

SHEET **00S10**

PILE SCHEDULE (CONTINUED)

SEQ. NO.	PILE I.D.	PILE TIP ELEVATION	LOCATION
135	61P–48	68.0'	SOLIDS HANDLING BUILDING
136	61P–49	68.0'	SOLIDS HANDLING BUILDING
137	61P–50	68.0'	SOLIDS HANDLING BUILDING
138	61P–51	68.0'	SOLIDS HANDLING BUILDING
139	61P–52	68.0'	SOLIDS HANDLING BUILDING
140	61P–53	68.0'	SOLIDS HANDLING BUILDING
141	**61P–54**	**68.0'**	**SOLIDS HANDLING BUILDING**
142	61P–55	68.0'	SOLIDS HANDLING BUILDING
143	61P–56	68.0'	SOLIDS HANDLING BUILDING
144	61P–57	68.0'	SOLIDS HANDLING BUILDING
145	61P–58	68.0'	SOLIDS HANDLING BUILDING
146	61P–59	68.0'	SOLIDS HANDLING BUILDING
147	61P–60	68.0'	SOLIDS HANDLING BUILDING
148	61P–61	68.0'	SOLIDS HANDLING BUILDING
149	61P–62	68.0'	SOLIDS HANDLING BUILDING
150	75P–1	77.0'	CHEMICAL STORAGE AND FEED BUILDING
151	75P–2	77.0'	CHEMICAL STORAGE AND FEED BUILDING
152	75P–3	77.0'	CHEMICAL STORAGE AND FEED BUILDING
153	75P–4	77.0'	CHEMICAL STORAGE AND FEED BUILDING
154	75P–5	77.0'	CHEMICAL STORAGE AND FEED BUILDING
155	75P–6	77.0'	CHEMICAL STORAGE AND FEED BUILDING
156	75P–7	77.0'	CHEMICAL STORAGE AND FEED BUILDING
157	75P–8	77.0'	CHEMICAL STORAGE AND FEED BUILDING
158	75P–9	77.0'	CHEMICAL STORAGE AND FEED BUILDING
159	75P–10	77.0'	CHEMICAL STORAGE AND FEED BUILDING
160	75P–11	77.0'	CHEMICAL STORAGE AND FEED BUILDING
161	75P–12	77.0'	CHEMICAL STORAGE AND FEED BUILDING
162	75P–13	77.0'	CHEMICAL STORAGE AND FEED BUILDING
163	75P–14	77.0'	CHEMICAL STORAGE AND FEED BUILDING
164	75P–15	77.0'	CHEMICAL STORAGE AND FEED BUILDING
165	75P–16	77.0'	CHEMICAL STORAGE AND FEED BUILDING
166	75P–17	77.0'	CHEMICAL STORAGE AND FEED BUILDING
167	75P–18	77.0'	CHEMICAL STORAGE AND FEED BUILDING
168	75P–19	77.0'	CHEMICAL STORAGE AND FEED BUILDING
169	**75P–20**	**77.0'**	**CHEMICAL STORAGE AND FEED BUILDING**
170	75P–21	77.0'	CHEMICAL STORAGE AND FEED BUILDING
171	75P–22	77.0'	CHEMICAL STORAGE AND FEED BUILDING
172	75P–23	77.0'	CHEMICAL STORAGE AND FEED BUILDING
173	75P–24	77.0'	CHEMICAL STORAGE AND FEED BUILDING
174	75P–25	77.0'	CHEMICAL STORAGE AND FEED BUILDING
175	75P–26	77.0'	CHEMICAL STORAGE AND FEED BUILDING
176	75P–27	77.0'	CHEMICAL STORAGE AND FEED BUILDING
177	75P–28	77.0'	CHEMICAL STORAGE AND FEED BUILDING
178	75P–29	77.0'	CHEMICAL STORAGE AND FEED BUILDING
179	75P–30	77.0'	CHEMICAL STORAGE AND FEED BUILDING
180	75P–31	77.0'	CHEMICAL STORAGE AND FEED BUILDING
181	75P–32	77.0'	CHEMICAL STORAGE AND FEED BUILDING
182	75P–33	77.0'	CHEMICAL STORAGE AND FEED BUILDING
183	75P–34	77.0'	CHEMICAL STORAGE AND FEED BUILDING
184	75P–35	77.0'	CHEMICAL STORAGE AND FEED BUILDING
185	75P–36	77.0'	CHEMICAL STORAGE AND FEED BUILDING

PILE SCHEDULE (CONTINUED)

SEQ. NO.	PILE I.D.	PILE TIP ELEVATION	LOCATION
186	76P–1	77.0'	FERRIC CHLORIDE CHEMICAL STORAGE
187	76P–2	77.0'	FERRIC CHLORIDE CHEMICAL STORAGE
188	76P–3	77.0'	FERRIC CHLORIDE CHEMICAL STORAGE
189	76P–4	77.0'	FERRIC CHLORIDE CHEMICAL STORAGE
190	76P–5	77.0'	FERRIC CHLORIDE CHEMICAL STORAGE
191	76P–6	77.0'	FERRIC CHLORIDE CHEMICAL STORAGE
192	76P–7	77.0'	FERRIC CHLORIDE CHEMICAL STORAGE
193	76P–8	77.0'	FERRIC CHLORIDE CHEMICAL STORAGE
194	76P–9	77.0'	FERRIC CHLORIDE CHEMICAL STORAGE
195	91P–1	77.0'	EFFLUENT PUMP STATION SURGE TANK
196	91P–2	77.0'	EFFLUENT PUMP STATION SURGE TANK
197	91P–3	77.0'	EFFLUENT PUMP STATION SURGE TANK
198	91P–4	77.0'	EFFLUENT PUMP STATION SURGE TANK
199	91P–5	77.0'	EFFLUENT PUMP STATION SURGE TANK
200	91P–6	77.0'	EFFLUENT PUMP STATION SURGE TANK
201	91P–7	77.0'	EFFLUENT PUMP STATION SURGE TANK
202	91P–8	77.0'	EFFLUENT PUMP STATION SURGE TANK

PILE SCHEDULE NOTES:

1. THE PILE CUT OFF ELEVATION IS THE TOP OF THE PILE ELEVATION WITH RESPECT TO ASSUMED REFERENCE GROUND FLOOR EL. TO BE 0.00, IN FEET.
2. SEE DETAILS 1, 2 & 3 ON SHEET 00S10 FOR TYPICAL PILE DETAILS.
3. SEE DRAWING 00S01 THRU 00S09 FOR GENERAL NOTES AND STANDARD DETAILS.
4. PILE NUMBERS WRITTEN WITH BOLD LETTERS REPRESENT INDICATOR PILES.
5. PILES SHOULD BE DRIVEN TO TIP ELEVATIONS PER SCHEDULE, OR TO PRACTICAL REFUSAL.
6. IF REFUSAL OCCURS BEFORE THE HOLE EXTENSION OF 5 FEET (PER DETAIL 1/00S10), CONTACT THE ENGINEER FOR LOCATION OF REPLACEMENT PILE AND REVISED PILE CAP.

PILE SCHEDULE (CONT'D)

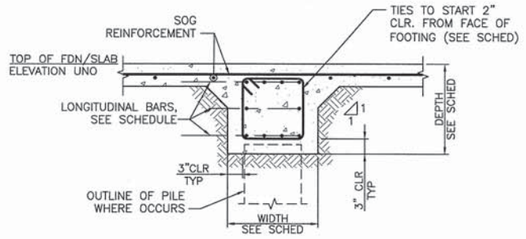

TYPICAL CAP/GRADE BEAM DETAIL

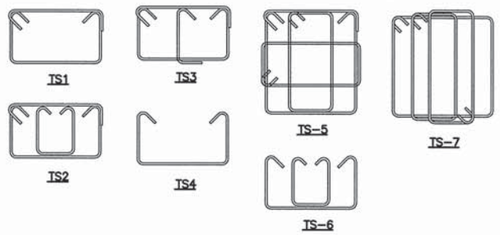

TYPICAL STIRRUP DETAIL

CONCRETE GRADE BEAM SCHEDULE — f'c=4000 psi

BEAM MARK SEE PLANS	SIZE "W" (INCH)	SIZE "D" (INCH)	LONGITUDINAL REINFORCEMENT TOP REINF "T"	LONGITUDINAL REINFORCEMENT MIDDLE REINF "M"	LONGITUDINAL REINFORCEMENT BOTT REINF "B"	SHEAR REINFORCEMENT NO. SIZE	SHEAR REINFORCEMENT SPACING (INCH)	SHEAR REINFORCEMENT TYPE	REMARKS
13GB–1	36"	36"	6–#8	–	6–#8	#4	9"	TS7	FULL LENGTH OF GRADE BEAM
14GB–1	30"	30"	4–#8	–	4–#8	#4	9"	TS2	FULL LENGTH OF GRADE BEAM
61GB–1	54"	36"	8–#8	–	8–#8	#4	8"	TS–7	
61GB–2	VAR	36"	8–#8	–	8–#8	#4	8"	TS–7	54" TO 36" EXTRA REBARS DEVELOPED IN 61GB–4
61GB–3	36"	36"	6–#8	–	6–#8	#4	8"	TS–7	
61GB–4	36"	VAR	6–#8	–	6–#8	#4	8"	TS–7	42" TO 36"
61GB–5	36"	42"	6–#8	–	6–#8	#4	8"	TS–7	
61GB–6	48"	42"	7–#8	–	7–#8	#4	8"	TS–7	
61GB–7	VAR	42"	7–#8		7–#8	#4	8"	TS–7	48" TO 36" EXTRA REBARS DEVELOPED IN 61GB–5

NOTES:

1. SEE FOUNDATION PLAN FOR GRADE BEAM LOCATION.
2. TOP OF GRADE BEAM ELEV TO MATCH TOP OF SLAB/FOOTING, UNO.
3. LONGITUDINAL REINF SHALL BE CONTINUOUS THRU SUPPORTING SLAB/FOOTINGS.
4. GRADE BEAMS SHALL BE CENTERED WITH PILES/FOOTINGS/COLUMNS UNLESS SPECIFICALLY NOTED OTHERWISE.

TYPICAL CAP/GRADE BEAM DETAIL AND SCHEDULE (1/–)
SCALE: NTS

TYPICAL WALL REINFORCEMENT

WALL MARK	THICK (IN)	VERTICAL BARS	HORIZONTAL BARS	REMARKS
12W–1	16"	#7@8" EF	#7@8" EF	–
12W–2	12"	#6@8" EF	#6@8" EF	–
12W–3	16"	#7@8" EF	#6@8" EF	–
12W–4	8"	#6@8"	#5@12" EF	ONE LAYER OF REBARS E.W.
13W–1	12"	#6@8" EF	#5@12" EF	–
13W–2	18"	#6@8" EF	#5@8" EF	–
13W–3	18"	#6@8" EF	#6@8" EF	HORIZ BARS TO BE HOOP REINFORCEMENT
13W–4	12"	#6@8" EF	#6@8" EF	HORIZ BARS TO BE HOOP REINFORCEMENT
13W–5	8"	#5@8"	#5@12"	–
32W–1	12"	#7@8" EF	#5@8" EF	–
32W–2	12"	#6@8" EF	#6@8" EF	–
32W–3	12"	#7@8" EF	#6@8" EF	–
32W–4	12"	#6@8" EF	#5@8" EF	–
32W–5	12"	#7@8" EF	#7@8" EF	–
32W–6	12"	#5@8" EF	#5@8" EF	–
61W–1	12"	#6@8" EF	#6@8" EF	HORIZ REINF BTWN GRIDS 3 & 4 IS #6@6"
71W–1	18"	#6@9" EF	#7@9" OF, #6@9 IF	#7@9" OUTSIDE FACE VERT DOWEL
71W–2	18"	#6@9" EF	#6@9" EF	–
71W–3	18"	#7@9" EF	#7@9" OF, #6@9 IF	#8@9" OUTSIDE FACE VERT DOWEL

NOTES:

REFER TO STRUCTURAL PLANS FOR SPECIFIC WALL DESIGNATIONS.

TYPICAL WALL REINFORCEMENT SCHEDULE (2/–)
SCALE: NTS

FILE: 215786–00S11.dwg
DATE: Jun 30, 2015–8:35:17am, jwebb

HDR Engineering, Inc.

ISSUE	DATE	DESCRIPTION
A	JUNE 2015	ISSUED FOR BID

PROJECT MANAGER	C. OLSON
DESIGNED	O. TAVANGAR
DESIGNED	
CHECKED	C. OLSON
DRAWN	D. ELDREDGE
DATE	JUNE 30, 2015
PROJECT NUMBER	215786

REGISTERED PROFESSIONAL ENGINEER — OMID P. TAVANGAR — NO. 54655 EXP. 12/31/15 — CIVIL — STATE OF CALIFORNIA — 6/30/15

CITY OF PINOLE CALIFORNIA 1903

PINOLE/HERCULES WATER POLLUTION CONTROL PLANT UPGRADE
CLIENT PN

STRUCTURAL

GRADE BEAM AND CONCRETE WALL SCHEDULES AND DETAILS

0 1" 2"

FILENAME	215786–00S11
SCALE	AS NOTED

SHEET **00S11**

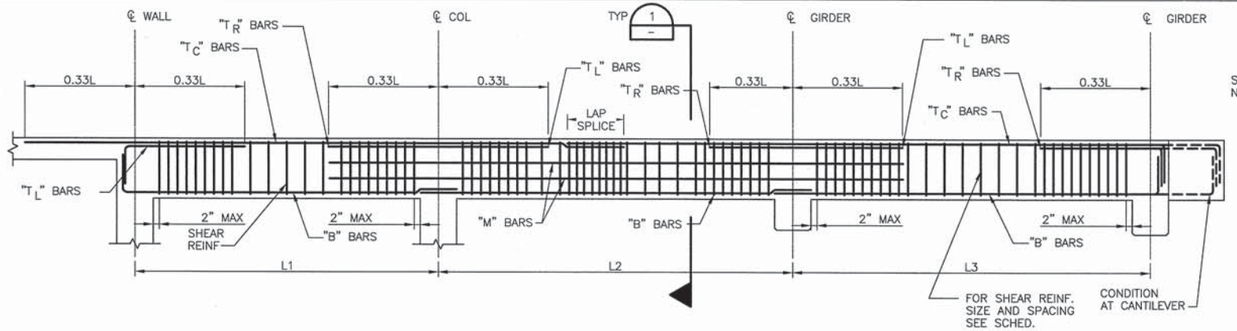

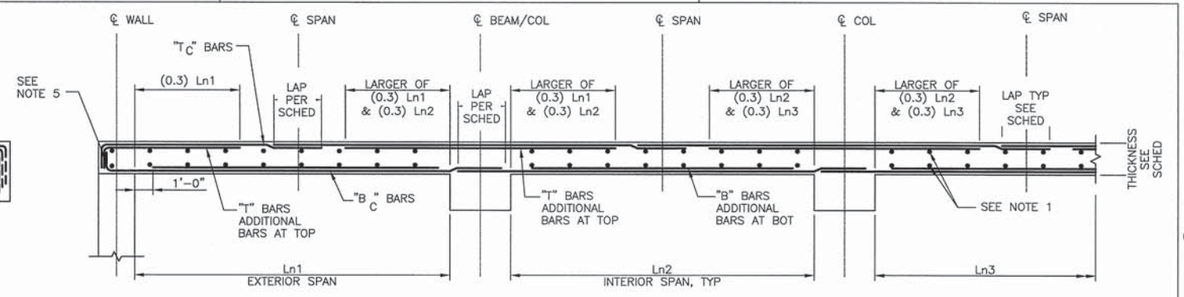

CONCRETE BEAM SCHEDULE

f'c=4000 psi

BEAM MARK SEE PLANS	SIZE "W" (INCH)	SIZE "D" (INCH)	TOP REINFORCEMENT LEFT "T_L"	TOP REINFORCEMENT CENTER "T_C"	TOP REINFORCEMENT RIGHT "T_R"	MIDDLE REINF "M"	BOTT REINF "B"	SHEAR REINFORCEMENT NO. SIZE	SHEAR REINFORCEMENT SPACING (INCH)	SHEAR REINFORCEMENT TYPE	REMARKS
12BM–1	16	28	–	3–#8	–	–	3–#8	#4	8"	TS1	–
32BM–1	12	22	–	3–#6	–	–	3–#6	#4	8"	TS1	–
32BM–3	16	16	–	3–#6	–	–	3–#6	#4	8"	TS1	–
61BM–1	24	24	2–#6	4–#6	2–#6	4–#6	4–#6	#4	8"	TS1	SEE DETAILS
61BM–2	24	24	2–#6	4–#6	2–#6	–	4–#6	#4	8"	TS2	–
61BM–3	24	42	8–#9	4–#9	8–#9	4–#9	8–#8	#4	8"	TS2	TOP & BOTTOM REBARS IN (2) LAYERS
61BM–4	24	24	2–#8	4–#8	2–#8	–	4–#8	#4	8"	TS2	–
61BM–5	12	16	–	3–#6	–	–	3–#6	#4	8"	TS1	–
71BM–1	12	18	–	2–#6	–	–	2–#6	#4	24"	TS1	–

CONC. BEAM NOTES:

1. SLAB REINFORCEMENT NOT SHOWN FOR CLARITY.
2. THE TOP REINFORCEMENT OF TWO ADJACENT BEAMS AT THE COMMON END WILL BE GOVERNED BY THE LARGER OF THE TWO.
3. "M" BARS SCHEDULED ARE TOTAL REQUIRED. PROVIDE 1/2 OF "M" BARS EACH SIDE OF BEAM.
4. ALL LONGITUDINAL BARS SHALL BE CONTINUOUS WITH STANDARD HOOK AT ENDS.
5. "LEFT" IS DEFINED AS NORTH OR WEST END AND "RIGHT" IS DEFINED AS SOUTH OR EAST END OF CONCRETE BEAMS.
6. TOP AND BOTTOM BARS SHALL BE CONTINUOUS FROM WALL TO WALL/CANTILEVER.
7. DEPTH SHOWN IS FOR MINIMUM. SEE DETAILS FOR MAXIMUM DEPTH.

CONC. SLAB NOTES:

1. TRANSVERSE BARS (TEMPERATURE REINFORCEMENT)
2. ALL BARS AND CONTINUOUS BARS SHALL BE IN THE SAME PLANE UNLESS NOTED OTHERWISE.
3. IN PLACEMENT OF REINFORCING, "Tc" & "T" BARS AND "Bc" & "B" BARS SHALL BE ALTERNATED TO ACHIEVE UNIFORM DISTRIBUTION AND SPACING.
4. THE LARGER QUANTITY OF "T" BARS FOR TWO ADJACENT SLAB MARKS WILL GOVERN THE "T" BARS FOR BOTH SLABS.
5. HOOK BOTTOM BARS AT EXTERIOR SUPPORTS.
6. SLABS ARE NOTED AS XXS–X ON PLANS.
7. FOR ADDITIONAL REBAR PLACEMENT INFO SEE SHEETS S19 THRU S29.

CONCRETE SLAB SCHEDULE

f'c=4000 psi

SLAB MARK SEE PLANS	THICK (INCH)	TOP REINFORCEMENT CONTIN "T_C"	TOP REINFORCEMENT ADDITIONAL "T" EXTERIOR SUPPORT	TOP REINFORCEMENT ADDITIONAL "T" INTERIOR SUPPORT	BOTTOM REINFORCEMENT CONTIN "B_C"	BOTTOM REINFORCEMENT ADDITIONAL "B"	TEMPERATURE REINFORCEMENT TOP & BOTTOM	REMARKS
13S–1	8"	#5@8"	–	–	#5@8"	–	#5@8"	–
13S–2	36"	#5@8"	–	–	#5@8"	–	#5@8"	–
14S–1	12"	#7@12"	–	–	#7@12"	–	#5@12"	–
32S–1	12"	#6@8"	–	–	#6@8"	–	#5@8"	–
32S–2	18"	#7@8"	–	–	#7@8"	–	#6@8"	–
32S–3	10"	#5@8"	–	–	#5@8"	–	#5@8"	–
32S–4	16"	#7@8"	–	–	#7@8"	–	#7@8"	–
61S–1	41"	#7@8"	–	–	#7@8"	–	#7@8"	–
61S–2	VAR	#7@8"	–	–	#7@8"	–	#7@8"	SEE SECTION A FOR THICKNESS
61S–3	15"	#7@8"	–	–	#7@8"	–	#5@8"	–
61S–4	12"	#7@8"	–	–	#7@8"	–	#5@8"	–
61S–5	12"	#6@8"	#5@8"	–	#6@8"	–	#5@8"	#7@8" ADD'L TOP REINF @ GRID 3
71S–1	12"	#5@12"	–	–	#5@12"	–	#5@12"	–

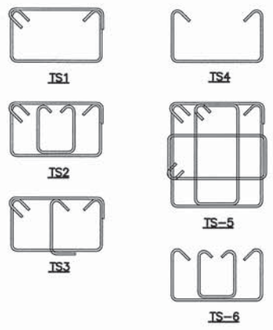

CONCRETE BEAM REINFORCING DETAIL AND SCHEDULE

STIRRUP DETAIL

ONE–WAY SLAB REINFORCING DETAIL AND SCHEDULE

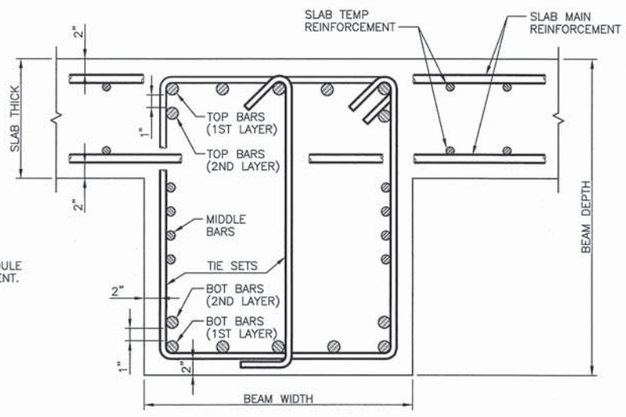

NOTES:

1. SEE DETAIL AND SCHEDULE FOR ALL REINFORCEMENT.

BAR PLACEMENT DETAIL

NTS

1

FILE: 215786–00S12.dwg
DATE: Jun 30, 2015–8:35:20am, jwebb

HDR Engineering, Inc.

ISSUE	DATE	DESCRIPTION
A	JUNE 2015	ISSUED FOR BID

PROJECT MANAGER	C. OLSON
DESIGNED	M. RAMANATHAN
DESIGNED	
CHECKED	C. OLSON
DRAWN	D. ELDREDGE
DATE	JUNE 30, 2015
PROJECT NUMBER	215786

REGISTERED PROFESSIONAL ENGINEER — OMID TAVANGAR — NO. 54655 EXP. 12/31/15 — CIVIL — STATE OF CALIFORNIA — 6/30/15

CITY OF PINOLE CALIFORNIA — 1903

PINOLE/HERCULES
WATER POLLUTION
CONTROL PLANT UPGRADE
CLIENT PN

STRUCTURAL

TYPICAL CONCRETE BEAM / SLAB DETAILS AND SCHEDULE

0 1" 2"

FILENAME	215786–00S12
SCALE	AS NOTED

SHEET **00S12**

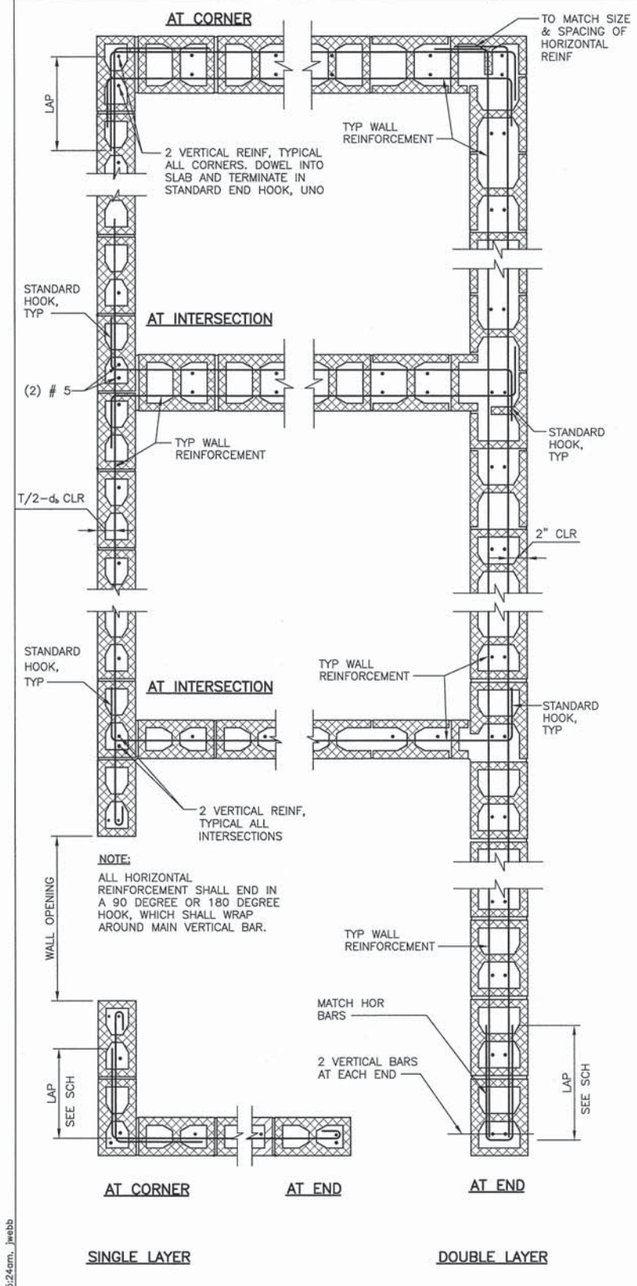

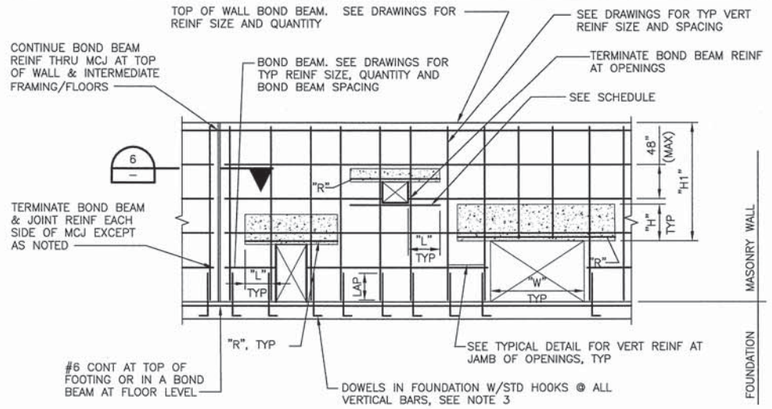

WALL ELEVATION

NOTES:

1. ONLY LINTEL GROUT IS SHOWN. GROUT SOLID ALL CELLS. SEE CMU WALL REINF SCHEDULE.
2. PROVIDE BOND BEAM AT ALL ELEVATED FLOORS WITH SAME REINFORCING AS TOP OF WALL, UNO.
3. STRAIGHT BARS EMBEDDED ONE CONCRETE LAP LENGTH INTO CONC FOUNDATION MAY BE USED AT CONTRACTOR'S OPTION.
4. "H" SHALL NOT BE SPLICED.
5. SHORE LINTEL MINIMUM 7 DAYS AFTER GROUTING.
6. LAP SEE DETAIL 4/–.

CMU REINFORCING SEISMIC DESIGN CATEGORY "D" AND ABOVE

2 – NTS

TYPE	REINFORCING LOCATION	12" WALL THK
VERTS	VERTICAL BARS	1–#5@16" OC CENTERED, UNO
	JAMBS	2–#7 UNO
	CORNERS/INTERSECTIONS	2–#5 SEE DETAIL 1
	MCJ	2–#5 DOUBLE CENTERED EA SIDE, UNO PER DETAILS 1&2
HORIZ	TOP OF WALL BOND BEAMS	2–#5
	HORIZ JOINT REINF	9 GAGE WIRE, JOINT REINF AT 16" VERT SPACING BETWEEN BOND BEAMS
	BELOW OPENINGS	2–#5
	LINTELS	TYP, SEE DETAIL 5
	INTERMEDIATE BOND BEAMS	1–#5@24" OC VERT SPACING

NOTES:

1. PROVIDE REINFORCING NOTED FOR ALL MASONRY WALLS UNLESS OTHERWISE NOTED ON DRAWINGS.
2. MAINTAIN MINIMUM 3"x3" CONTINUOUS VERTICAL CELL AT EACH REBAR. PLACE WALLS TO MAXIMUM 4'–0" HEIGHT BEFORE GROUTING.
3. PLACE REBAR IN WALL WITH LAP LENGTH PER DETAIL 4.
4. GROUT ALL CELLS. LOCATE TWO VERTICAL RUN OF REINFORCEMENT AT ALL CORNERS AND EACH SIDE OF ALL MASONRY MCJ'S.
5. PROVIDE WIRE REBAR POSITIONERS TO HOLD BARS IN PLACE.
6. STOP GROUT POUR 1/2" BELOW TOP OF COURSE AT EACH GROUT LIFT.
7. VERTICAL BARS SHALL NOT BE SPLICES EXCEPT AT FLOOR LEVEL. USE OF OPEN ENDED CMU UNITS ARE ACCEPTABLE.

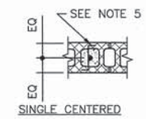

SINGLE CENTERED

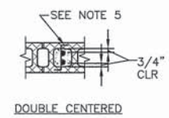

DOUBLE CENTERED

CMU REINFORCING SCHEDULE

3 – NTS

MASONRY LAP SPLICE LENGTHS : f'm=1,500 psi, fy=60,000 psi

BAR SIZE	6" CMU	8" CMU		10" CMU		12" CMU	
	BAR @ CL	BAR @ CL	BAR @ EDGE	BAR @ CL	BAR @ EDGE	BAR @ CL	BAR @ EDGE
#3	2'–0"	2'–0"	2'–0"	2'–0"	2'–0"	2'–0"	2'–0"
#4	2'–1"	2'–1"	2'–7"	2'–1"	2'–5"	2'–1"	2'–4"
#5	3'–3"	2'–7"	4'–0"	2'–7"	3'–10"	2'–7"	3'–7"
#6	–	4'–9"	8'–2"	4'–4"	7'–8"	4'–4"	7'–3"
#7	–	6'–7"	–	5'–1"	10'–5"	5'–1"	9'–10"

NOTES:

1. WHEN REQUIRED SPLICE LENGTH EXCEEDS 4'–8" – USE MECHANICAL TENSION SPLICES WITH LOW LIFT GROUTING.

MASONRY REINFORCING SPLICE TABLE

4 – NTS

MARK	"W"	"R"	"L"	"H"	STIRRUPS	REMARKS
ML–1	1'–4" THRU 3'–4"	1–#5	25"	8"	–	
ML–2	1'–4" THRU 3'–4"	2–#5	25"	16"	–	
ML–3	3'–5" THRU 6'–8"	2–#5	25"	24"	–	
ML–4	6'–9" THRU 10'–0"	2–#6	30"	32"	–	
ML–5	10'–1" THRU 12'–0"	2–#7	35"	40"	#3@16"	
ML–6	12'–1" THRU 14'–0"	2–#7	35"	40"	#3@8"	

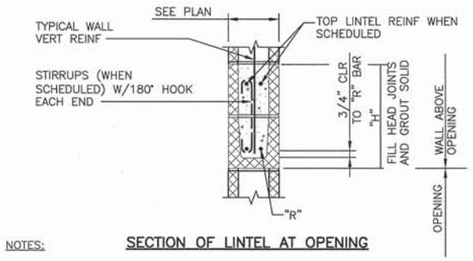

NOTES: SECTION OF LINTEL AT OPENING

1. OPENINGS 8" OR LESS WIDE MAY OCCUR WITHOUT LINTEL REINFORCING AS LONG AS NO REINFORCING IS INTERRUPTED.
2. ML–1 TO BE USED ONLY AT NON–LOAD BEARING SITUATIONS.
3. SEE DRAWINGS FOR LINTEL TYPES. WHERE LINTEL TYPES ARE NOT SHOWN PROVIDE LINTELS FROM THE ABOVE SCHEDULE BASED ON THICKNESS OF WALL AND MAX CLEAR OPENING SIZE AND VERIFY LINTEL TYPE W/ENGINEER PRIOR TO CONSTRUCTION.

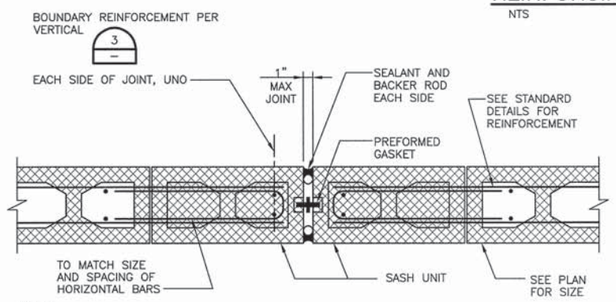

NOTES:

1. CONDITION SHOWN FOR TWO LAYERS OF REINFORCEMENT. FOR ONE LAYER CONDITION, HOOK HORIZONTAL REINF AT JOINT AND ELIMINATE ⊐ BARS.
2. NO HORIZONTAL REINFORCEMENT SHALL EXTEND THROUGH THE JOINT EXCEPT AS SHOWN IN TYPICAL CMU WALL ELEVATION.
3. MAXIMUM JOINT SPACING SHALL BE 24 FT. UNLESS SPECIFICALLY SHOWN OTHERWISE.

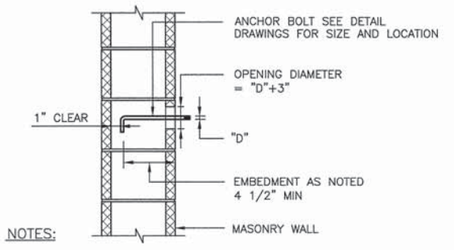

NOTES:

1. SET ANCHOR BOLTS WITH TEMPLATE.
2. CUT BLOCK WEB AS REQUIRED TO ALLOW PLACEMENT OF ANCHOR BOLT WITH 1/2" MINIMUM GROUT BETWEEN ANCHOR BOLT AND BLOCK.

REINFORCEMENT AT CMU WALL

1 – NTS

CMU LINTEL SCHEDULE

5 – NTS

MASONRY CONTROL JOINT (MCJ)

6 – NTS

ANCHOR BOLT IN MASONRY

7 – NTS

FILE: 215786–00S13.dwg
DATE: Jun 30, 2015–8:35:24am, jwebb

HDR Engineering, Inc.

ISSUE	DATE	DESCRIPTION
A	JUNE 2015	ISSUED FOR BID

PROJECT MANAGER	C. OLSON
DESIGNED	M. RAMANATHAN
DESIGNED	
CHECKED	C. OLSON
DRAWN	D. ELDREDGE
DATE	JUNE 30, 2015
PROJECT NUMBER	215786

REGISTERED PROFESSIONAL ENGINEER — CAMILO TAVARONE — NO. 54655 EXP. 12/31/15 — CIVIL — STATE OF CALIFORNIA — 6/30/15

CITY OF PINOLE CALIFORNIA 1903

PINOLE/HERCULES
WATER POLLUTION
CONTROL PLANT UPGRADE
CLIENT PN

STRUCTURAL

TYPICAL MASONRY DETAILS

0 1" 2"

FILENAME	215786–00S13
SCALE	AS NOTED

SHEET 00S13

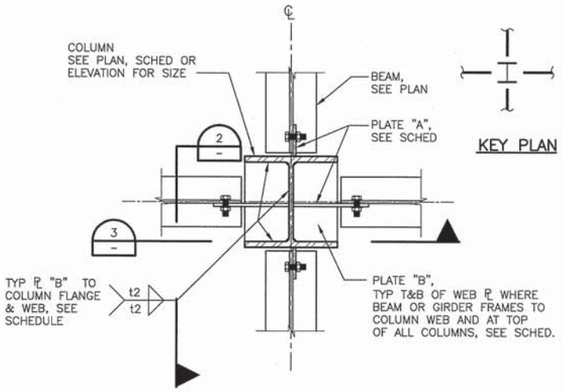

PLAN SECTION AT NON-FRAME COLUMN (1)
NTS

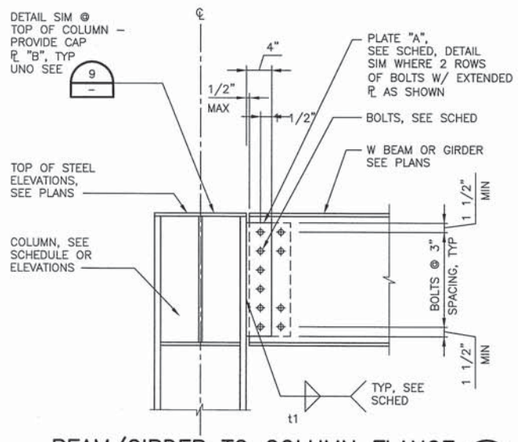

BEAM/GIRDER TO COLUMN FLANGE (2)
NTS

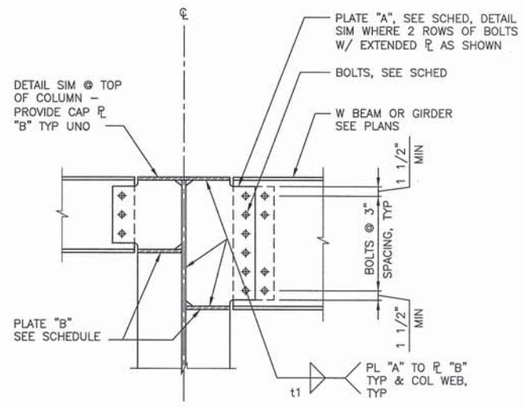

BEAM/GIRDER TO COLUMN WEB (3)
NTS

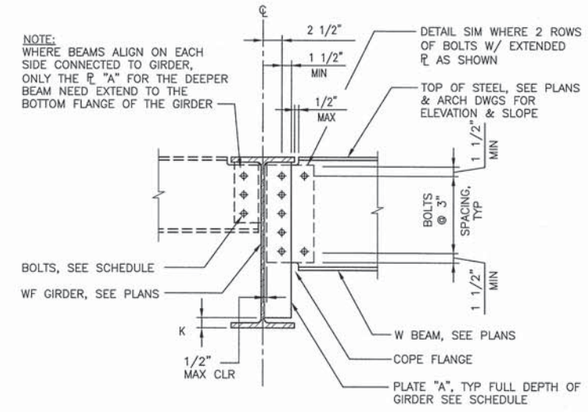

BEAM TO GIRDER (4)
NTS

COLUMN SCHEDULE Fy = 50,000 PSI		
COLUMN MARK	SIZE	DOUBLER ℄ NO. OF SIDES – THICK
12C-1	W12x45	–
12C-2	W12x53	–
61C-3	W12x87	–

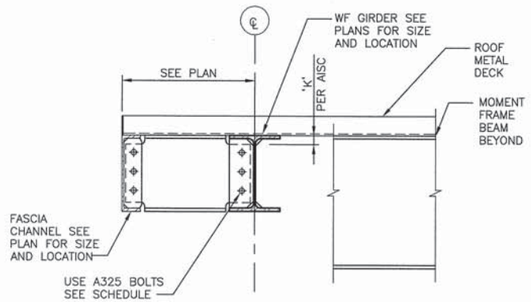

COLUMN SCHEDULE (5)
NTS

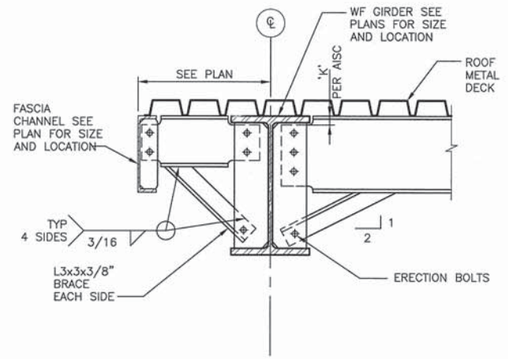

ROOF OVERHANG (6)
NTS

GIRDER BRACE (7)
NTS

		BEAM-TO-GIRDER CONNECTIONS					BEAM-TO-COLUMN CONNECTIONS				
BEAM/ GIRDER SIZE	BOLT TYPE & SIZE UNO (4)	PLATE "A" THICKNESS [IN] (1)	PLATE "B" THICKNESS [IN]	WELD t1 [IN]	WELD t2 [IN]	QUANTITY OF BOLTS REQD (2,3)	PLATE "A" THICKNESS (IN)	PLATE "B" THICKNESS (IN)	WELD t1 (IN)	WELD t2 (IN)	QUANTITY OF BOLTS REQD (2,3)
C8, C12 W8, W10	3/4"ø A325-N	3/8	1/2	1/4	1/4	2	3/8	1/2	1/4	1/4	2
W12, W14	7/8"ø A325-N	3/8	1/2	1/4	1/4	3	3/8	1/2	1/4	1/4	3
W16	7/8"ø A325-N	3/8	1/2	1/4	1/4	4	1/2	1/2	5/16	5/16	4
W18	7/8"ø A325-N	3/8	1/2	1/4	1/4	5	1/2	1/2	5/16	5/16	7
W21	7/8"ø A325-N	1/2	1/2	5/16	5/16	6	1/2	1/2	5/16	5/16	8
W24	7/8"ø A325-N	1/2	1/2	5/16	5/16	7	3/4	5/8	3/8	3/8	9

CONNECTION NOTES:

1. AT BEAM TO GIRDER MOMENT CONNECTIONS, THICKNESS OF PLATE "A" = SCHEDULED THICKNESS + 1/4".
2. AT BEAM TO GIRDER MOMENT CONNECTIONS, QUANTITY OF BOLTS REQD = SCHEDULED VALUE + 3 MINIMUM. WHERE 2 ROWS OF BOLTS REQUIRED, FILL ROW CLOSEST TO GIRDER WEB.
3. TO BEAM END FIRST W/ BALANCE OF BOLTS PLACED IN 2ND ROW W/ EQUAL NUMBER OF BOLTS TOP & BOTTOM OF CONNECTION PLATE – SEE (2) (3) (4)
4. PROVIDE A325-SC BOLTS AT ALL BEAMS CONNECTED TO BRACING DIAGONALS.

BEAM/GIRDER CONNECTION SCHED (9)
NTS

FILE: 215786-00S14.dwg
DATE: Jun 30, 2015 - 8:35:28am, jwebb

HDR Engineering, Inc.

ISSUE	DATE	DESCRIPTION
A	JUNE 2015	ISSUED FOR BID

PROJECT MANAGER	C. OLSON
DESIGNED	O. TAVANGAR
DESIGNED	
CHECKED	O. TAVANGAR
DRAWN	D. ELDREDGE
DATE	JUNE 30, 2015
PROJECT NUMBER	215786

REGISTERED PROFESSIONAL ENGINEER
OMID TAVANGAR
NO. 54655
EXP. 12/31/15
CIVIL
STATE OF CALIFORNIA
6/30/15

CITY OF PINOLE CALIFORNIA 1903

PINOLE/HERCULES
WATER POLLUTION
CONTROL PLANT UPGRADE
CLIENT PN

STRUCTURAL

TYPICAL STEEL DETAILS - I

0 1" 2"

FILENAME	215786-00S14
SCALE	AS NOTED

SHEET **00S14**

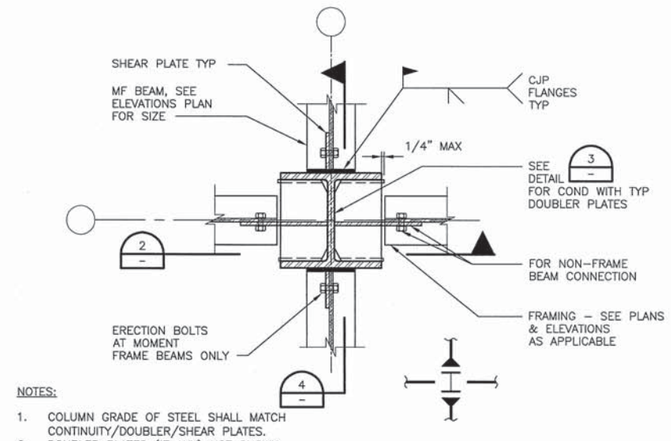

NOTES:

1. COLUMN GRADE OF STEEL SHALL MATCH CONTINUITY/DOUBLER/SHEAR PLATES.
2. DOUBLER PLATES (IF ANY) NOT SHOWN FOR CLARITY.

TYPICAL SPECIAL MOMENT RESISTING FRAME BEAM/COLUMN CONNECTION (SMRF). WELDED UNREINFORCED FLANGE-WELDED WEB (WUF-W) CONNECTION DEFINED PER ASCE 358 (1)

NTS

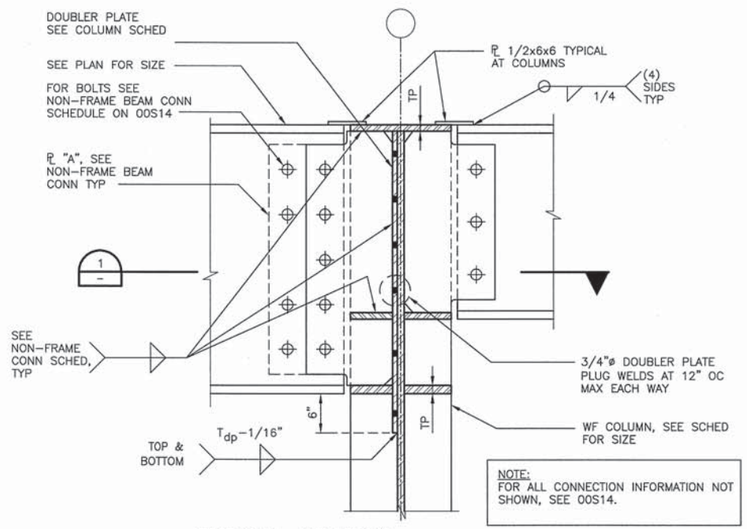

NOTE:
FOR ALL CONNECTION INFORMATION NOT SHOWN, SEE 00S14.

TYPICAL SECTION AT NON FRAME BEAMS (2)

NTS

SMRF NOTES:

1. CJP GROOVE WELD AT TOP & BOTTOM FLANGES. AT BOTTOM FLANGE REMOVE WELD BACKING, BACKGOUGE AND ADD 5/16" MINIMUM FILLET WELD, WITH WELD: QC/QA CATEGORY AH/T. AT TOP FLANGE DO NOT REMOVE BACKING, BUT ADD 5/16" MINIMUM FILLET WELD BETWEEN BACKING AND COLUMN, WITH WELD QC/QA CATEGORY AH/T
2. CJP GROOVE WELD FULL LENGTH OF WEB BETWEEN WELD ACCESS HOLES. PROVIDE NON-FUSIBLE WELD TABS. REMOVE WELD TABS AFTER WELDING AND GRIND END OF WELD SMOOTH AT WELD ACCESS HOLE. WELD: QC/QA CATEGORY BH/T.
3. SHEAR TAB TO MATCH BEAM WEB THICKNESS, LENGTH SHALL BE SO TO ALLOW OVERLAP WITH THE WELD ACCESS HOLE AT TOP AND BOTTOM, AND THE WIDTH SHALL EXTEND 2" MINIMUM BACK ALONG THE BEAM, BEYOND THE END OF THE WELD ACCESS HOLE, (SEE DETAIL 6).
4. FULL-DEPTH PARTIAL PENETRATION FROM FAR SIDE. WELD: QC/QA CATEGORY BM/T.
5. FILLET WELD SHEAR TAB TO BEAM WEB. WELD SIZE SHALL BE EQUAL TO THICKNESS OF SHEAR TAB MINUS 1/16". WELD SHALL EXTEND OVER THE SHEAR TAB ENTIRE HEIGHT AND ACROSS THE TOP AND BOTTOM. WELD: QC/QA CATEGORY BL/L.
6. 2-3/4"ø ERECTION BOLTS EACH END.
7. CJP TYPICAL WELD: QC/QA CATEGORY BM/T. FOR EXTERIOR BEAM-COLUMN CONNECTIONS (BEAM ONE SIDE ONLY), WELD OF CONTINUITY PLATE TO COLUMN FLANGE AT FREE SIDE MAY BE FILLET WELDS AT TOP AND BOTTOM FACE OF PLATE.
8. UNLESS A THICKER OR WIDER CONTINUITY PLATE IS SHOWN ELSEWHERE, THE MINIMUM WIDTH SHALL EXTEND FLUSH WITH COLUMN FLANGES AND THICKNESS TO MATCH LARGER OF THE FOLLOWING: OF CONTINUITY PL T&B - THICKNESS "TP" OF PL EQUAL TO THE MAXIMUM OF THE FOLLOWING:
   (1) TF + 1/8" OF MOMENT GIRDER FRAMING INTO COL FLANGE.
   (2) 1/2"
9. REMOVE WELD TABS TO 1/4" MAX FROM EDGE OF CONTINUITY PLATE. GRIND END OF WELD SMOOTH (500 MICRO-IN), NOT FLUSH. DO NOT GOUGE COLUMN FLANGE.
10. ALL WELD METAL FOR MOMENT FRAMES SHALL HAVE CHARPY NOTCH TOUGH PROPERTIES OF 20 LB-FT AT -20 DEGREES FAHRENHEIT AND 40 LB-FT AT 70° FAHRENHEIT.
11. CJP GROOVE WELD AT TOP AND BOTTOM CONTINUITY PLATES, DO NOT REMOVE BACKING, BUT ADD 5/16" MINIMUM FILLET WELD BETWEEN BACKING AND COLUMN FLANGE/WEB, WITH WELD QC/QA CATEGORY OF BM/T.
12. SEE FEMA-353, RECOMMENDED SPECIFICATIONS AND QUALITY ASSURANCE GUIDELINES FOR STEEL MOMENT-FRAME CONSTRUCTION FOR SEISMIC APPLICATIONS AND, FOR FABRICATION DETAILS INCLUDING CUTTING METHODS AND SMOOTHNESS REQUIREMENTS.
13. ALL WELDERS PERFORMING RESTRICTED ACCESS HOLE SHALL BE QUALIFIED IN ACCORDANCE TO FEMA 353 FIGURE B-1.

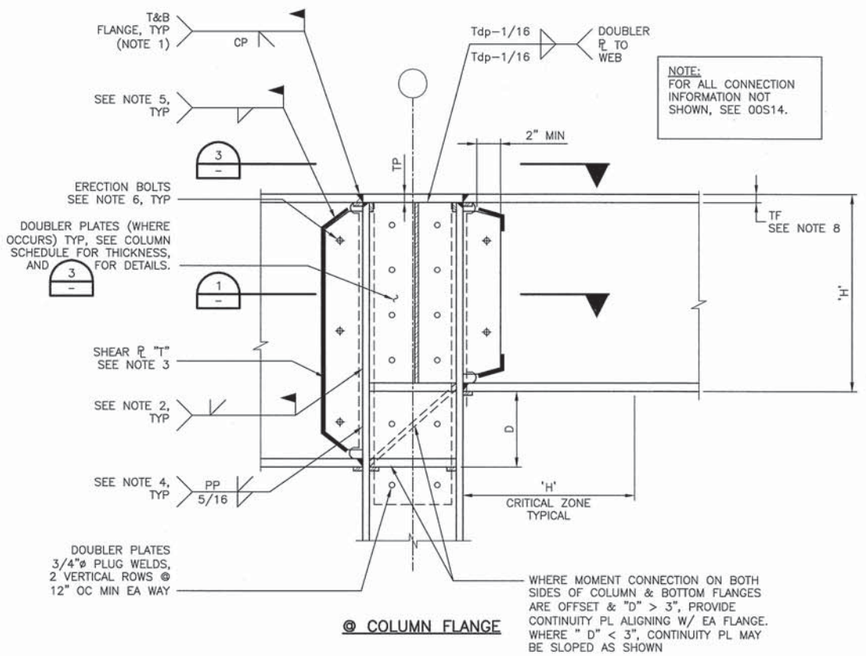

NOTE:
FOR ALL CONNECTION INFORMATION NOT SHOWN, SEE 00S14.

@ COLUMN FLANGE

TYPICAL SECTION AT FRAME BEAMS (4)

NTS

WUF-W (DEFINED PER ASCE 358) MOMENT FRAME CONNECTION NOTES (5)

NTS

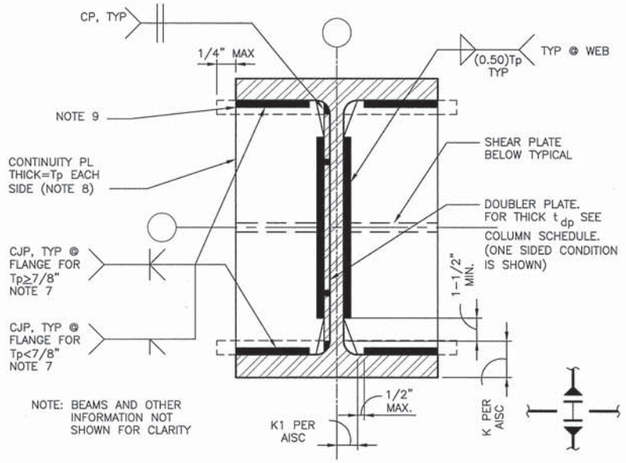

CONTINUITY AND DOUBLER PLATE DETAILS (3)

NTS

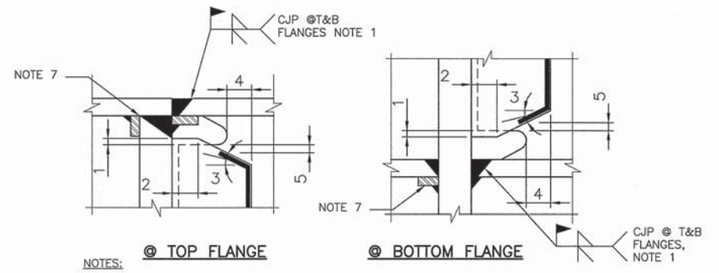

@ TOP FLANGE

@ BOTTOM FLANGE

NOTES:

1. 1/4" MINIMUM, 1/2" MAXIMUM.
2. 1" MINIMUM.
3. 30 DEGREES (+/- 10 DEGREES).
4. 2"MINIMUM.
5. 1/2 MINIMUM DISTANCE, 1" MAXIMUM DISTANCE, FROM END OF FILLET WELD TO EDGE OF WELD ACCESS HOLE.

TYPICAL SMFR CONNECTION DETAILS (6)

NTS

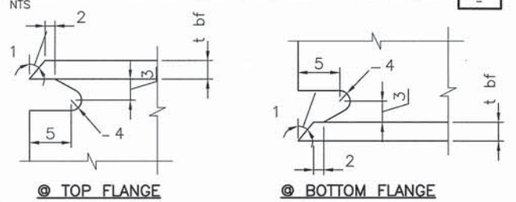

@ TOP FLANGE

@ BOTTOM FLANGE

NOTES:

1. BEVEL AS REQUIRED BY AWS D1.1 FOR SELECTED GROOVE WELD PROCEDURE.
2. LARGER OF tbf OR 1/2". (PLUS 1/2*tbf , OR MINUS 1/4*tbf).
3. 3/4*tbf TO tbf, 3/4" MINIMUM (± 1/4").
4. 3/8" MINIMUM RADIUS. (PLUS NOT LIMITED, OR MINUS 0).
5. 3*tbf (±1/2").

TYPICAL WELD ACCESS HOLE DETAIL (7)

NTS

FILE: 215786-00S15.dwg
DATE: Jun 30, 2015 - 8:35:32am, jweb

HDR Engineering, Inc.

ISSUE	DATE	DESCRIPTION
A	JUNE 2015	ISSUED FOR BID

PROJECT MANAGER	C. OLSON
DESIGNED	O. TAVANGAR
DESIGNED	
CHECKED	O. TAVANGAR
DRAWN	D. ELDREDGE
DATE	JUNE 30, 2015
PROJECT NUMBER	215786

REGISTERED PROFESSIONAL ENGINEER OMID TAVANGAR NO. 54655 EXP. 12/31/15 CIVIL STATE OF CALIFORNIA 6/30/15

CITY OF PINOLE CALIFORNIA 1903

PINOLE/HERCULES
WATER POLLUTION
CONTROL PLANT UPGRADE
CLIENT PN

STRUCTURAL

TYPICAL STEEL DETAILS - II

0 1" 2"

FILENAME	215786-00S15
SCALE	AS NOTED

SHEET 00S15

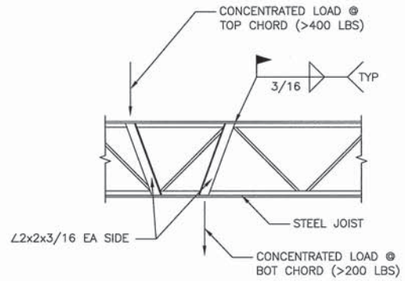

NOTE:

1. PROVIDE REINFORCEMENT WHEN CONCENTRATED LOAD IS MORE THAN 4" FROM PANEL JOINT.

TYPICAL JOIST REINFORCEMENT AT CONCENTRATED LOAD DETAIL

1 / –

NTS

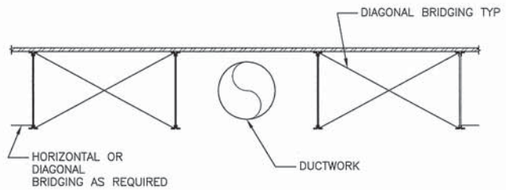

NOTES:

1. USE ONLY WHERE DUCTS ARE SHOWN BETWEEN JOISTS ON MECHANICAL SHEETS. VERIFY LOCATION WITH CONTRACTOR.
2. DO NOT INSTALL DUCTS IN TWO ADJACENT JOISTS SPACES.

TYPICAL INTERRUPTION OF BRIDGING AT DUCTWORK DETAIL

2 / –

NTS

FILE: 215786-00S16.dwg
DATE: Jun 30, 2015 - 8:35:36am, jwebb

HDR Engineering, Inc.

ISSUE	DATE	DESCRIPTION
A	JUNE 2015	ISSUED FOR BID

PROJECT MANAGER	C. OLSON
DESIGNED	M. RAMANATHAN
DESIGNED	
CHECKED	C. OLSON
DRAWN	D. ELDREDGE
DATE	JUNE 30, 2015
PROJECT NUMBER	215786

REGISTERED PROFESSIONAL ENGINEER
DAVID TAYANGAR
NO. 54655
EXP. 12/31/15
CIVIL
STATE OF CALIFORNIA
6/30/15

CITY OF PINOLE CALIFORNIA 1903

PINOLE/HERCULES
WATER POLLUTION
CONTROL PLANT UPGRADE
CLIENT PN

STRUCTURAL

TYPICAL STEEL DETAILS - III

0 1" 2"

FILENAME	215786-00S16
SCALE	AS NOTED

SHEET **00S16**

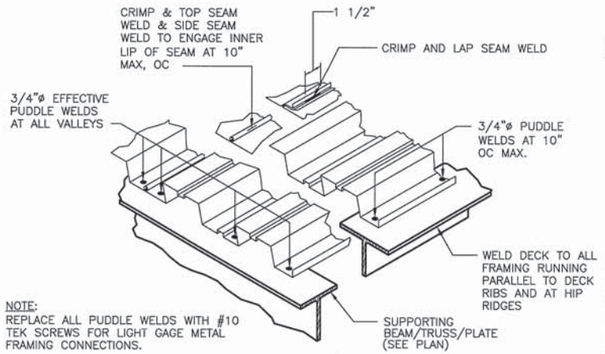

NOTE:
REPLACE ALL PUDDLE WELDS WITH #10 TEK SCREWS FOR LIGHT GAGE METAL FRAMING CONNECTIONS.

METAL DECK WELDING
NTS 1

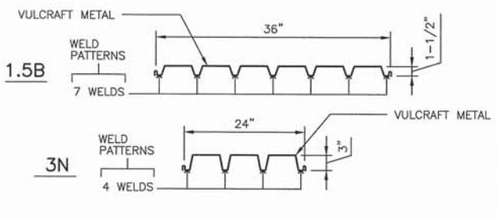

FOR DECK WELDS, SEE 1

APPLICATION	DEPTH	VULCRAFT DESIGN.	GAGE	MINIMUM SECTION PROPERTIES PER FOOT WIDTH: I in^4	S+in^3	S-in^3	Fy KSI
1. ELECTRICAL BUILDING 2. SOLIDS HANDLING CANOPY 3. MAINTENANCE SHOP	1 1/2"	1.5B	18	0.292	0.318	0.327	33

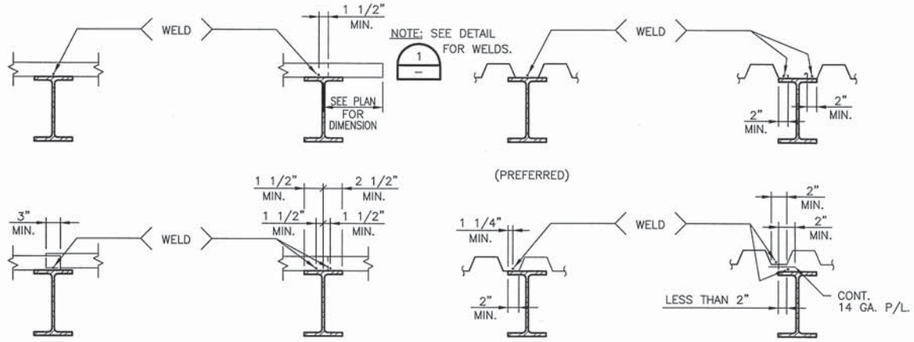

STEEL DECK TO BEAM WELD
NTS 3

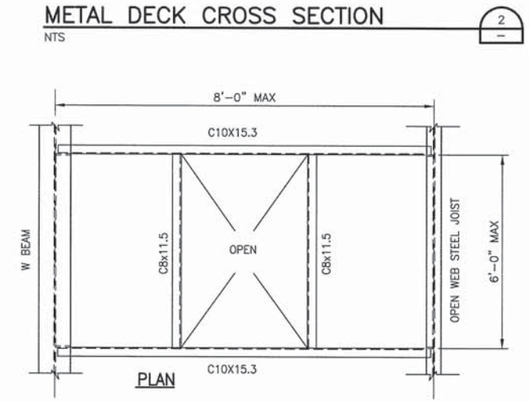

NOTE:
IF OPENINGS ARE CLOSER OR LARGER THAN SHOWN, REINFORCE DECK – SEE OTHER DETAILS.

UNREINFORCED OPENING
NTS 4

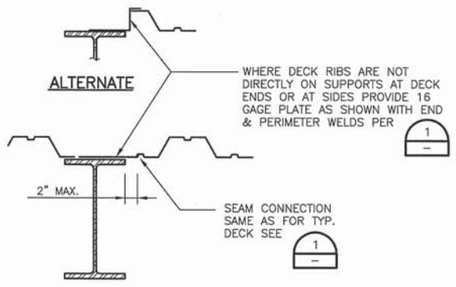

DETAIL AT CLOSURE
NTS 8

METAL DECK CROSS SECTION
NTS 2

PLAN

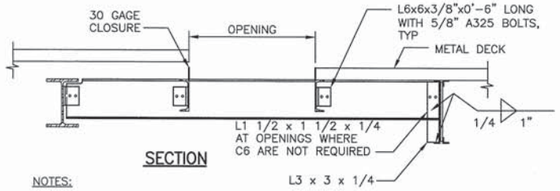

SECTION

NOTES:
1. THIS DETAIL APPLIES AT:
   A. CIRCULAR OPENING WITH DIAMETER 12" INCHES OR LARGER.
   B. RECTANGULAR OPENING WITH BOTH SIDES 12 INCHES OR LARGER.
2. SEE SECTION 05313 OF THE SPECIFICATIONS OR DETAILS 5 & 7 FOR REQUIRED REINFORCING OF METAL DECK AT OPENING SMALLER THAN THOSE NOTED ABOVE WHICH EVER RESULTS IN MORE STRINGENT REQUIREMENTS SHALL GOVERN.
3. REPLACE CHANNELS WITH C-STUDS FOR OPENINGS IN LIGHT GAGE METAL FRAMING. USE TEK SCREWS FOR LIGHT GAGE METAL FRAMING CONNECTIONS.

METAL DECK OPENING
NTS 5

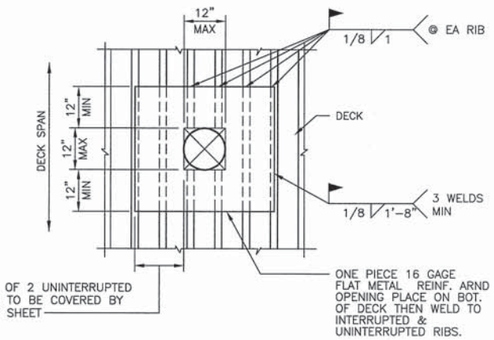

ROOF DECK OPENING DETAIL (12" MAX OPENING)
NTS 6

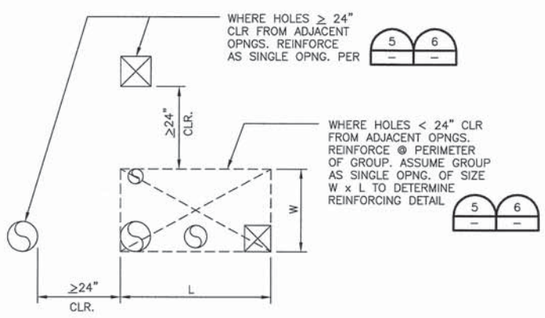

GROUPS OF HOLES IN ROOF DECK
NTS 7

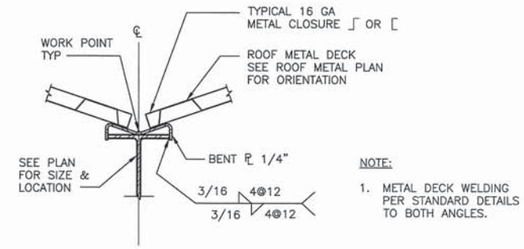

NOTE:
1. METAL DECK WELDING PER STANDARD DETAILS TO BOTH ANGLES.

METAL DECK CONNECTION
NTS 9

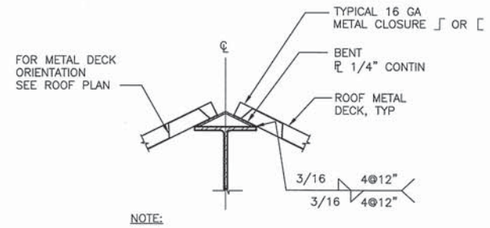

NOTE:
1. METAL DECK WELDING PER STANDARD DETAILS, TYPICAL.

METAL DECK CONNECTION
NTS 10

FILE: 215786-00S17.dwg
DATE: Jun 30, 2015-8:35:39am, jwebb

HDR Engineering, Inc.

ISSUE	DATE	DESCRIPTION
A	JUNE 2015	ISSUED FOR BID

PROJECT MANAGER	C. OLSON
DESIGNED	O. TAVANGAR
DESIGNED	
CHECKED	O. TAVANGAR
DRAWN	D. ELDREDGE
DATE	JUNE 30, 2015
PROJECT NUMBER	215786

REGISTERED PROFESSIONAL ENGINEER OMID TAVANGAR NO. 54655 EXP. 12/31/15 CIVIL STATE OF CALIFORNIA 6/30/15

CITY OF PINOLE CALIFORNIA 1903

PINOLE/HERCULES
WATER POLLUTION
CONTROL PLANT UPGRADE
CLIENT PN

STRUCTURAL

TYPICAL METAL DECK DETAILS

0 1" 2"

FILENAME	215786-00S17
SCALE	AS NOTED

SHEET 00S17

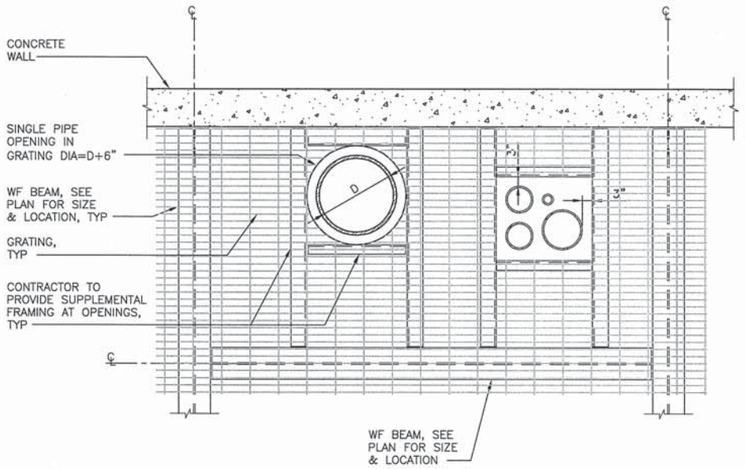

NOTES:
1. CONTRACTOR TO COORDINATE LOCATION OF PIPES & DUCT WORK WITH PROCESS AND MECHANICAL DRAWINGS.
2. CONTRACTOR TO PROVIDE SUPPLEMENTAL STEEL FRAMING AT OPENINGS, TYPICAL.

GRATING PENETRATION
NTS — 1

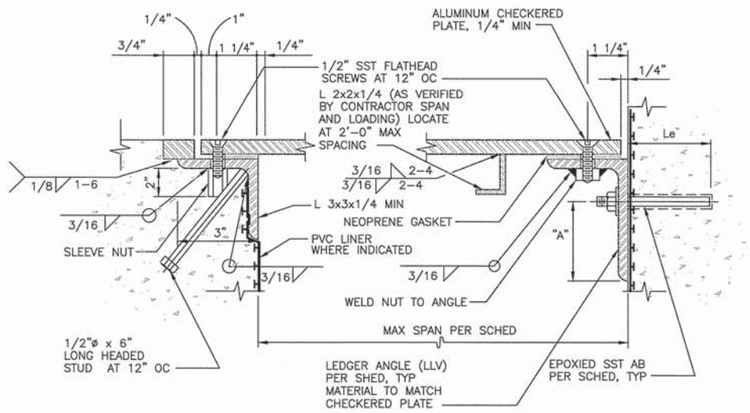

NOTES:
1. ALL METAL ITEMS ARE 6061-T6 ALUMINUM UNLESS NOTED OTHERWISE IN DESIGN DRAWINGS.
2. PVC LINER SHOWN FOR CONSTRUCTION WHERE APPLICABLE.
3. CHECKERED PLATE DESIGN EXCLUDES H20 LOADING.
4. ALL ALUMINUM IN CONTACT WITH CONCRETE SHALL BE COATED WITH ZINC CHROMATE PRIMER BEFORE EMBEDDING IN CONC.

ALUMINUM CHECKERED PLATE COVERED OPENING
NTS — 2

ALUMINUM CHECKERED PLATE COVER SCHEDULE

DESIGN LOADING PSF	MAX SPAN (FT)	LEDGER ANGLE SIZE	BOLT DIAMETER (IN)	BOLT SPACING (IN)	EMBED LENGTH, Le (IN)	"A" (INCH)
100	2'-0"	L3x2x1/4	1/2	24	5	1.25
	3'-0"	L3x2x1/4	1/2	24	5	1.25
	4'-0"	L3x2x1/4	1/2	24	5	1.25
	5'-0"	L3x2x1/4	5/8	24	6	1.25
150	2'-0"	L3 1/2x3x1/4	1/2	24	5	1.75
	3'-0"	L3 1/2x3x1/4	1/2	24	5	1.75
	4'-0"	L3 1/2x3x1/4	5/8	24	6	1.75
	5'-0"	L3 1/2x3x1/4	3/4	24	6	1.75
200	2'-0"	L4x3x1/4	5/8	24	6	2.00
	3'-0"	L4x3x1/4	5/8	24	6	2.00
	4'-0"	L4x3x1/4	5/8	24	6	2.00
	5'-0"	L4x3x5/16	3/4	24	6	2.00
250	2'-0"	L5x3x5/16	5/8	24	6	2.50
	3'-0"	L5x3x5/16	5/8	24	6	2.50
	4'-0"	L5x3x5/16	3/4	24	6	2.50
	5'-0"	L5x3x5/16	3/4	24	6	2.50

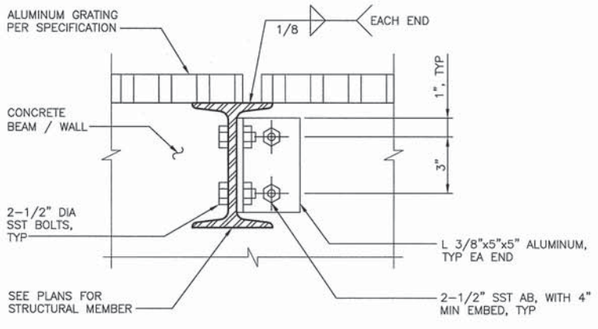

GRATE SUPPORT
NTS — 3

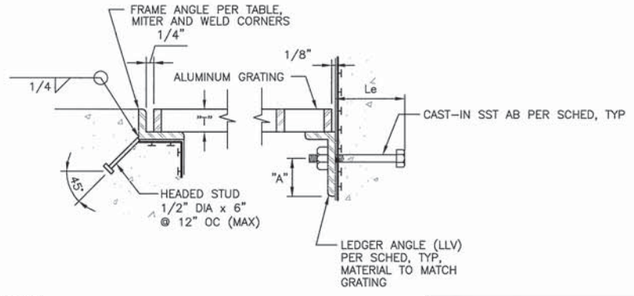

NOTES:
1. GRATING DEPTH TO BE DETERMINED BY MANUFACTURER AND APPROVED BY ENGINEER (UNO).
2. ALL ENDS AND OPENINGS SHALL BE BANDED.
3. ALL GRATING SHALL BE SECURED IN PLACE WITH REMOVABLE FASTENERS, SEE GRATING ANCHOR DETAIL.
4. WEIGHT OF GRATING SECTION SHALL NOT EXCEED 80 LBS.
5. BEARING BARS SHALL BE DEPTH T x 3/16" @ 1 3/16" OC, MINIMUM, AND CROSS BARS SHALL BE @ 4" OC.
6. ALL METAL ITEMS ARE 6061-T6 ALUMINUM UNLESS NOTED OTHERWISE.
7. PVC LINER SHOWN FOR CONSTRUCTION WHERE APPLICABLE.
8. ALL ALUMINUM IN CONTACT WITH CONCRETE SHALL BE COATED WITH ZINC CHROMATE PRIMER BEFORE EMBEDDING IN CONC.
9. GRATING DESIGN EXCLUDES H20 LOADING.

FRAME ANGLE TABLE

GRATING DEPTH "T"	FRAME ANGLE SIZE MIN
1"	1 3/4x1 1/4x1/4
1 1/4"	2x1 1/2x1/4
1 1/2"	1 3/4x1 3/4x1/4
1 3/4"	2x2x1/4
2"	2 1/2x2 1/2x1/2
2 1/4"	2 1/2x2 1/2x1/2
2 1/2"	3x2 1/2x1/2

ALUMINUM GRATING SUPPORT DETAIL
NTS — 4

ALUMINUM GRATING SUPPORT SCHEDULE

DESIGN LOADING PSF	MAX SPAN	LEDGER ANGLE	BOLT DIAMETER	BOLT SPACING	EMBEDED LENGTH Le	"A" (INCH)
100	2'-0"	L3x2x1/4	1/2 "	24	6	1.25
	3'-0"	L3x2x1/4	1/2 "	24	6	1.25
	4'-0"	L3x2x1/4	1/2 "	24	6	1.25
	5'-0"	L3x2x5/16	1/2 "	24	6	1.25
150	2'-0"	L3 1/2x3x1/4	1/2 "	24	6	1.75
	3'-0"	L3 1/2x3x1/4	1/2 "	24	6	1.75
	4'-0"	L3 1/2x3x5/16	1/2 "	24	6	1.75
	5'-0"	L3 1/2x3x5/16	5/8 "	24	6	1.75
200	2'-0"	L4x3x1/4	1/2 "	24	6	2.00
	3'-0"	L4x3x1/4	1/2 "	24	6	2.00
	4'-0"	L4x3x5/16	5/8 "	24	6	2.00
	5'-0"	L4x3x3/8	3/4 "	24	6	2.00
250	2'-0"	L5x3x5/16	1/2 "	24	6	2.50
	3'-0"	L5x3x5/16	5/8 "	24	6	2.50
	4'-0"	L5x3x5/16	5/8 "	24	6	2.50
	5'-0"	L5x3x5/16	3/4 "	24	6	2.50

FILE: 215786-00S18.dwg
DATE: Jun 30, 2015-8:35:42am, jwebb

HDR Engineering, Inc.

ISSUE	DATE	DESCRIPTION
A	JUNE 2015	ISSUED FOR BID

PROJECT MANAGER	C. OLSON
DESIGNED	M. RAMANATHAN
DESIGNED	
CHECKED	C. OLSON
DRAWN	D. ELDREDGE
DATE	JUNE 30, 2015
PROJECT NUMBER	215786

REGISTERED PROFESSIONAL ENGINEER — DAVID T. AVANGARD — NO. 54655 EXP. 12/31/15 — CIVIL — STATE OF CALIFORNIA — 6/30/15

CITY OF PINOLE CALIFORNIA — 1903

PINOLE/HERCULES
WATER POLLUTION
CONTROL PLANT UPGRADE
CLIENT PN

STRUCTURAL

TYPICAL GRATING DETAILS

0 1" 2"

FILENAME	215786-00S18
SCALE	AS NOTED

SHEET 00S18

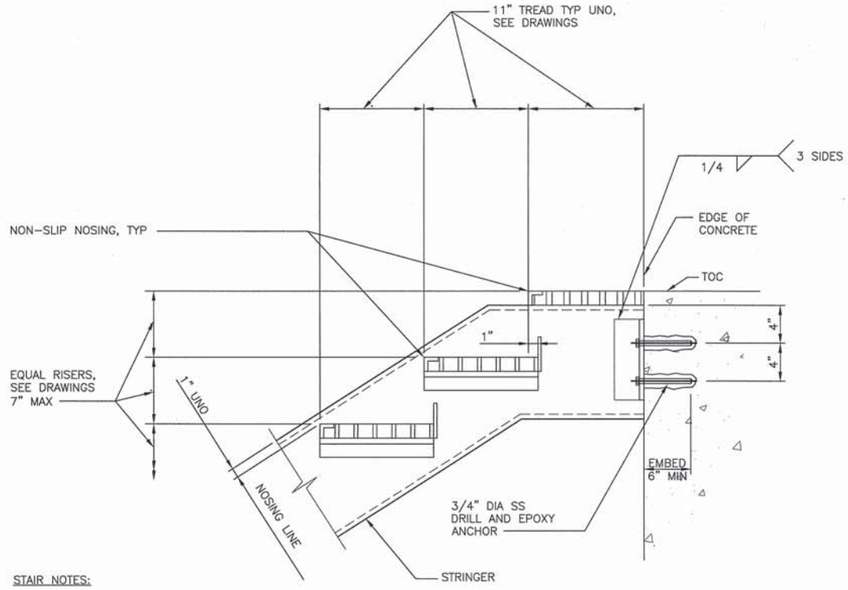

STAIR NOTES:

1. ALL STAIRS AND APPURTENANT ITEMS SHOWN ON DRAWINGS SHALL BE ALUMINUM, UNLESS SHOWN AS CONCRETE STAIRS ON DRAWINGS. ALL FASTENERS SHALL BE STAINLESS STEEL TYPE 316.
2. STAIR TREADS, STRINGERS, RAILING AND CONNECTION DESIGN BY FABRICATOR. SEE SPECIFICATION SECTION 05505.

ALUMINUM STAIR AT TOP (1)
NTS

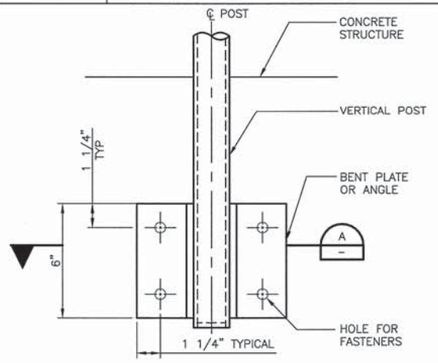

FRONT VIEW

NOTES:
1. VERTICAL POST SHALL BE 1 1/2" NOMINAL DIAMETER SCHEDULE 40 PIPE.
2. FASTENERS SHALL BE 1/2" DIAMETER STAINLESS STEEL ADHESIVE ANCHORS WITH 4" MININUM EMBEDMENT. PROVIDE STAINLESS STEEL NUTS AND WASHER.

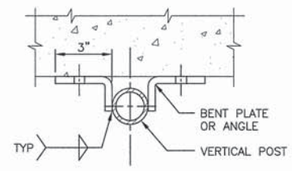

SECTION – A

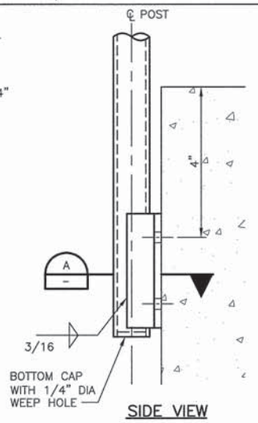

SIDE VIEW

GUARDRAIL POST ANCHORAGE DETAIL AT CONCRETE (2)
NTS

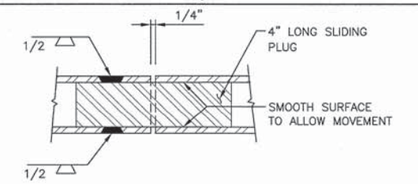

NOTES:
1. MECHANICAL ATTACHMENT MAY BE SUBSTITUTED FOR WELDING
2. GRIND WELDS SMOOTH

RAIL EXPANSION JOINT (3)
NTS

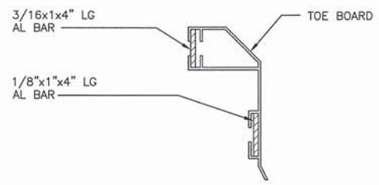

TOEBOARD VERTICAL SECTION

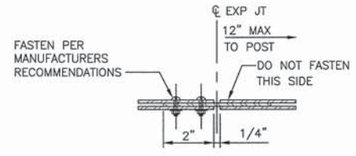

HORIZONTAL SECTION

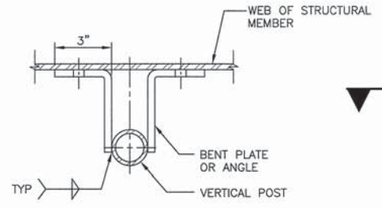

NOTE:
TOE BOARD NOT SHOWN.

PLAN VIEW

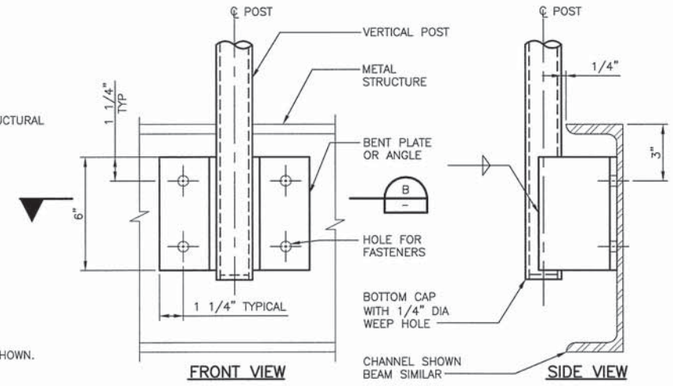

FRONT VIEW — SIDE VIEW

TYPICAL TOEBOARD EXPANSION JOINT (4)
NTS

SECTION (B)
NTS

RAILING POST ANCHORAGE DETAIL AT METAL (5)
NTS

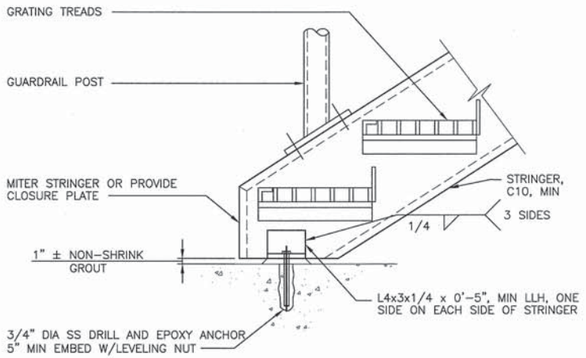

ALUMINUM STAIR AT BOTTOM (6)
NTS

NOTE: TOE BOARD TO MATCH EXISTING

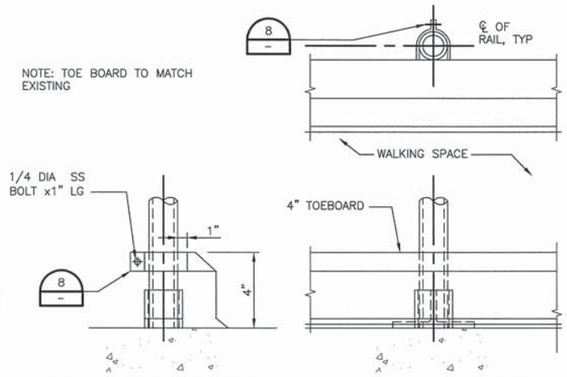

TOE BOARD DETAIL (7)
NTS

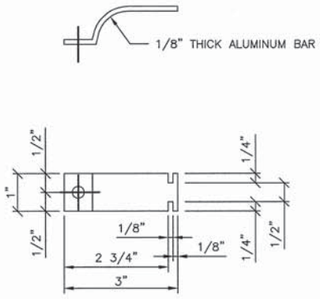

TOE BOARD CONNECTOR (8)
NTS

RAILING NOTES:

1. ALL RAILING SHALL BE ALUMINUM, UNLESS OTHERWISE SPECIFIED.
2. ALL FASTENERS SHALL BE STAINLESS STEEL.
3. RAILING SHALL BE INSTALLED SO AS NOT TO INTERFERE WITH ANY PIPING, EQUIPMENT OR EASE-OUT AIR PIPING ASSEMBLY. CONTRACTOR TO COORDINATE.
4. RAILING POST LOCATIONS SHALL BE FIELD MEASURED AND RAILING FABRICATED TO FIT. NO FIELD CUTTING OR WELDING WILL BE PERMITTED. RAILING WHICH DOES NOT FIT MOUNTING PREVIOUSLY SET IN CONCRETE WILL BE REJECTED.
5. WHERE NO CURB, PROVIDE TOE BOARD UNLESS SPECIFICALLY CALLED OUT AS NO TOE BOARD REQUIRED.
6. SPACING OF EXPANSION JOINT IN RAIL AND TOE BOARD SHALL NOT EXCEED 20 FEET.
7. RAILING POST TO BE EVENLY SPACED.

FILE: 215786-00S19.dwg
DATE: Jun 30, 2015 - 8:35:46am, jwebb

HDR Engineering, Inc.

ISSUE	DATE	DESCRIPTION
A	JUNE 2015	ISSUED FOR BID

PROJECT MANAGER	C. OLSON
DESIGNED	M. RAMANATHAN
DESIGNED	
CHECKED	C. OLSON
DRAWN	D. ELDREDGE
DATE	JUNE 30, 2015
PROJECT NUMBER	215786

REGISTERED PROFESSIONAL ENGINEER — DAVID T. KAVANAGH — NO. 54655 EXP. 12/31/15 — CIVIL — STATE OF CALIFORNIA — 6/30/15

CITY OF PINOLE CALIFORNIA 1903

PINOLE/HERCULES
WATER POLLUTION
CONTROL PLANT UPGRADE
CLIENT PN

STRUCTURAL

TYPICAL RAILING DETAILS - I

0 1" 2"

FILENAME	215786-00S19
SCALE	AS NOTED

SHEET **00S19**

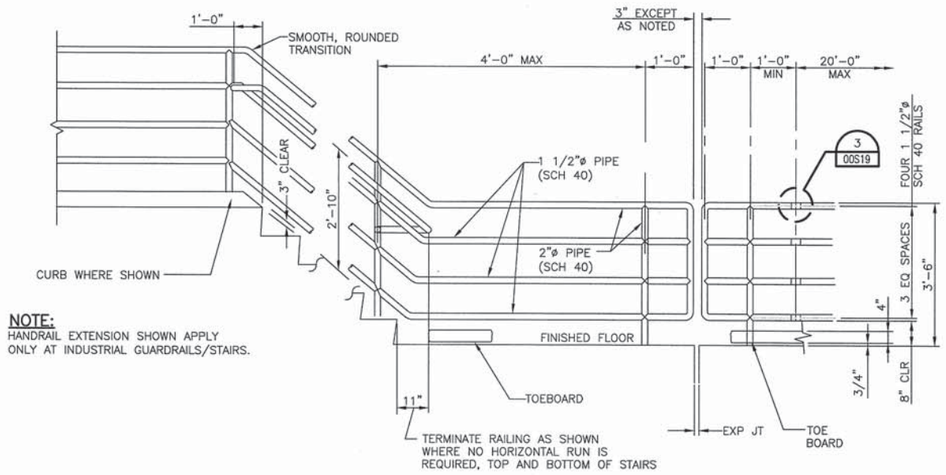

NOTE:
HANDRAIL EXTENSION SHOWN APPLY ONLY AT INDUSTRIAL GUARDRAILS/STAIRS.

INDUSTRIAL GUARDRAIL
NTS — 1 / –

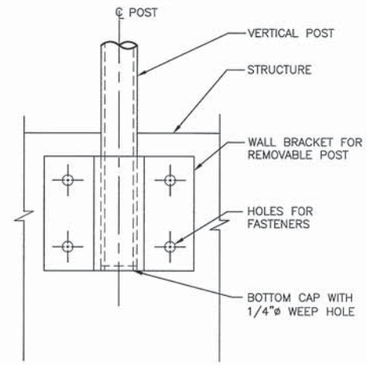

REMOVABLE GUARDRAIL POST WALL MOUNTING
NTS — 2 / –

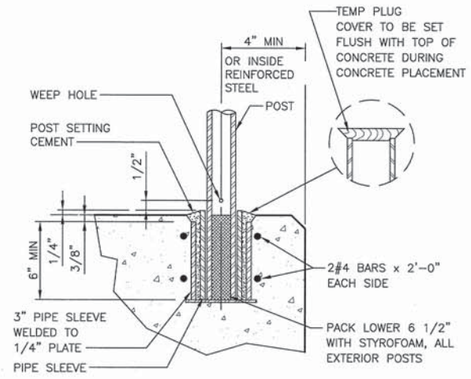

REMOVABLE GUARDRAIL POST SETTING
NTS — 3 / –

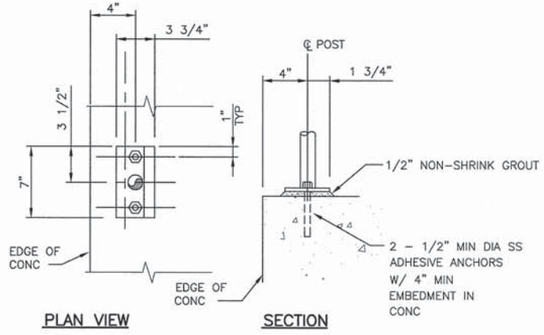

POST MOUNTING – RECTANGULAR BASE
NTS — 4 / –

FILE: 215786–00S20.dwg
DATE: Jun 30, 2015–8:35:50am, jwebb

HDR Engineering, Inc.

ISSUE	DATE	DESCRIPTION
A	JUNE 2015	ISSUED FOR BID

PROJECT MANAGER	C. OLSON
DESIGNED	M. RAMANATHAN
DESIGNED	
CHECKED	C. OLSON
DRAWN	D. ELDREDGE
DATE	JUNE 30, 2015
PROJECT NUMBER	215786

REGISTERED PROFESSIONAL ENGINEER — OMID TAYARANI — NO. 54659 EXP. 12/31/15 — CIVIL — STATE OF CALIFORNIA

CITY OF PINOLE CALIFORNIA — 1903

PINOLE/HERCULES WATER POLLUTION CONTROL PLANT UPGRADE
CLIENT PN

STRUCTURAL

TYPICAL RAILING DETAILS - II

0 1" 2"

FILENAME	215786–00S20
SCALE	AS NOTED

SHEET **00S20**

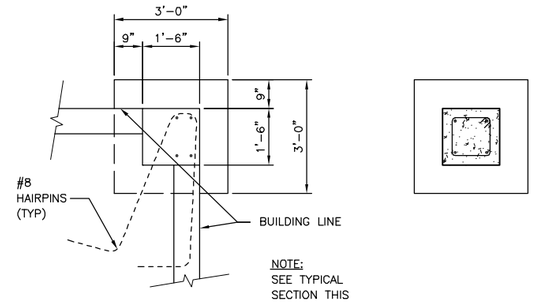

NOTE:
SEE TYPICAL SECTION THIS PAGE.

PLAN

SECTIONAL PLAN

DETAIL 1/ –
1/2" = 1'-0"

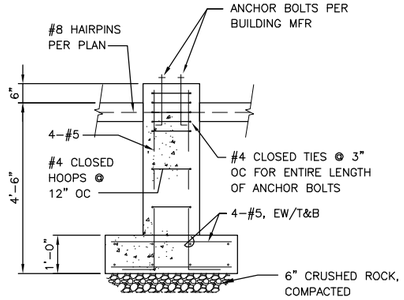

TYPICAL SECTION
THRU COLUMN FOOTING
NTS

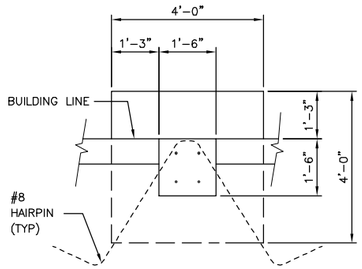

NOTE:
SEE TYPICAL SECTION THIS PAGE.

PLAN

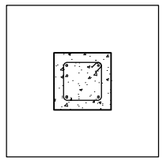

SECTIONAL PLAN

DETAIL 2/ –
1/2" = 1'-0"

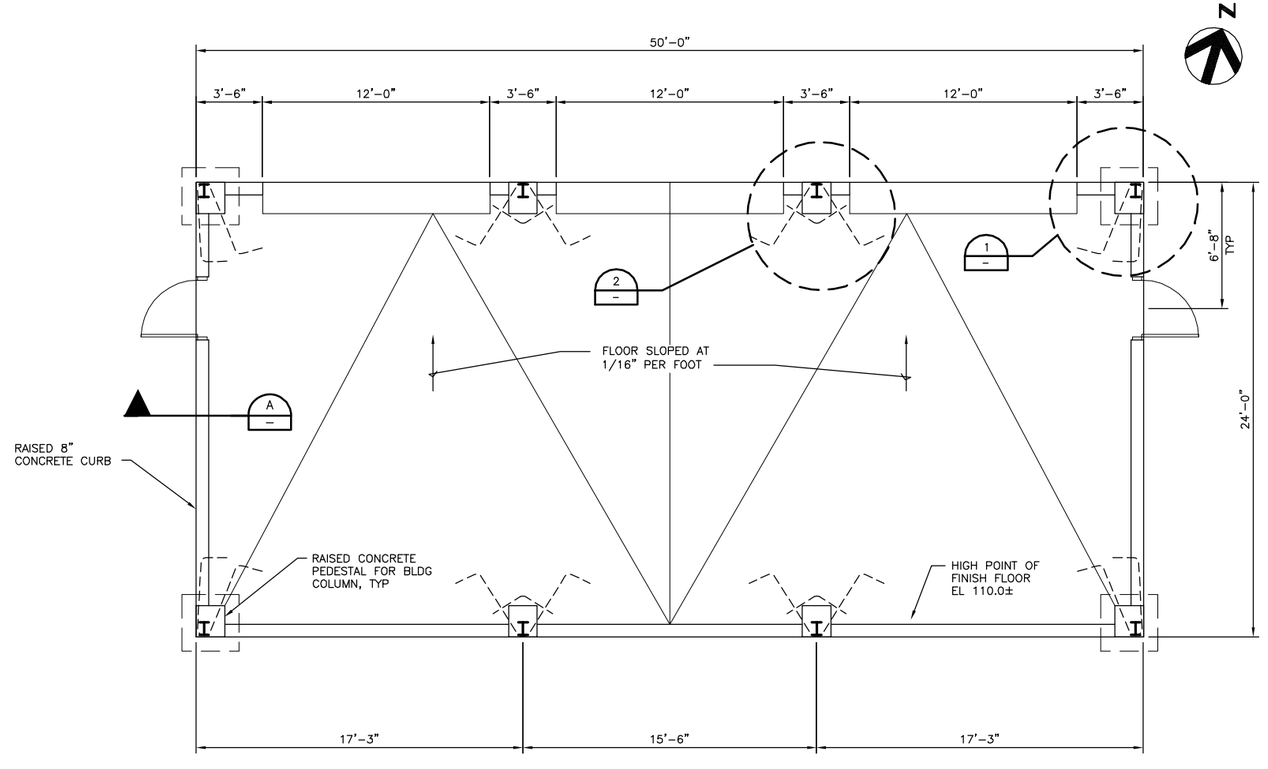

FLOOR PLAN
1/4" = 1'-0"

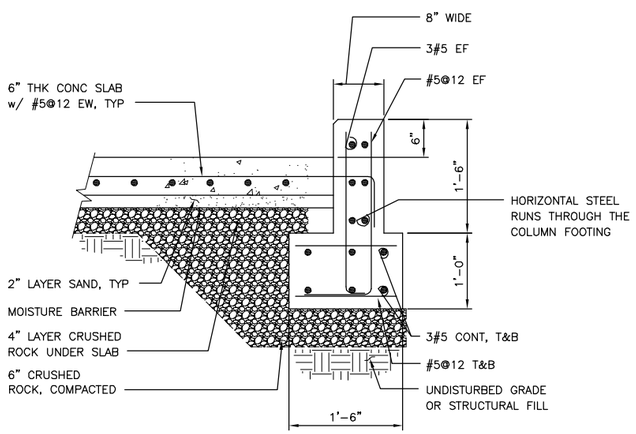

SECTION A/ –
1" = 1'-0"

FILE: 215786-01S101.dwg
DATE: Oct 06, 2015-6:09:41pm, ranider

HDR Engineering, Inc.

ISSUE	DATE	DESCRIPTION
A	JUNE 2015	ISSUED FOR BID

PROJECT MANAGER	C. OLSON
DESIGNED	
DESIGNED	
CHECKED	O. TAVANGAR
DRAWN	D. ELDREDGE
DATE	JUNE 30, 2015
PROJECT NUMBER	215786

CITY OF PINOLE CALIFORNIA 1903

PINOLE/HERCULES
WATER POLLUTION
CONTROL PLANT UPGRADE
CLIENT PN

STRUCTURAL

PUBLIC WORKS BUILDING
FOUNDATION PLAN AND DETAILS

0 1" 2"

FILENAME	215786-01S101
SCALE	NTS

SHEET
01S101

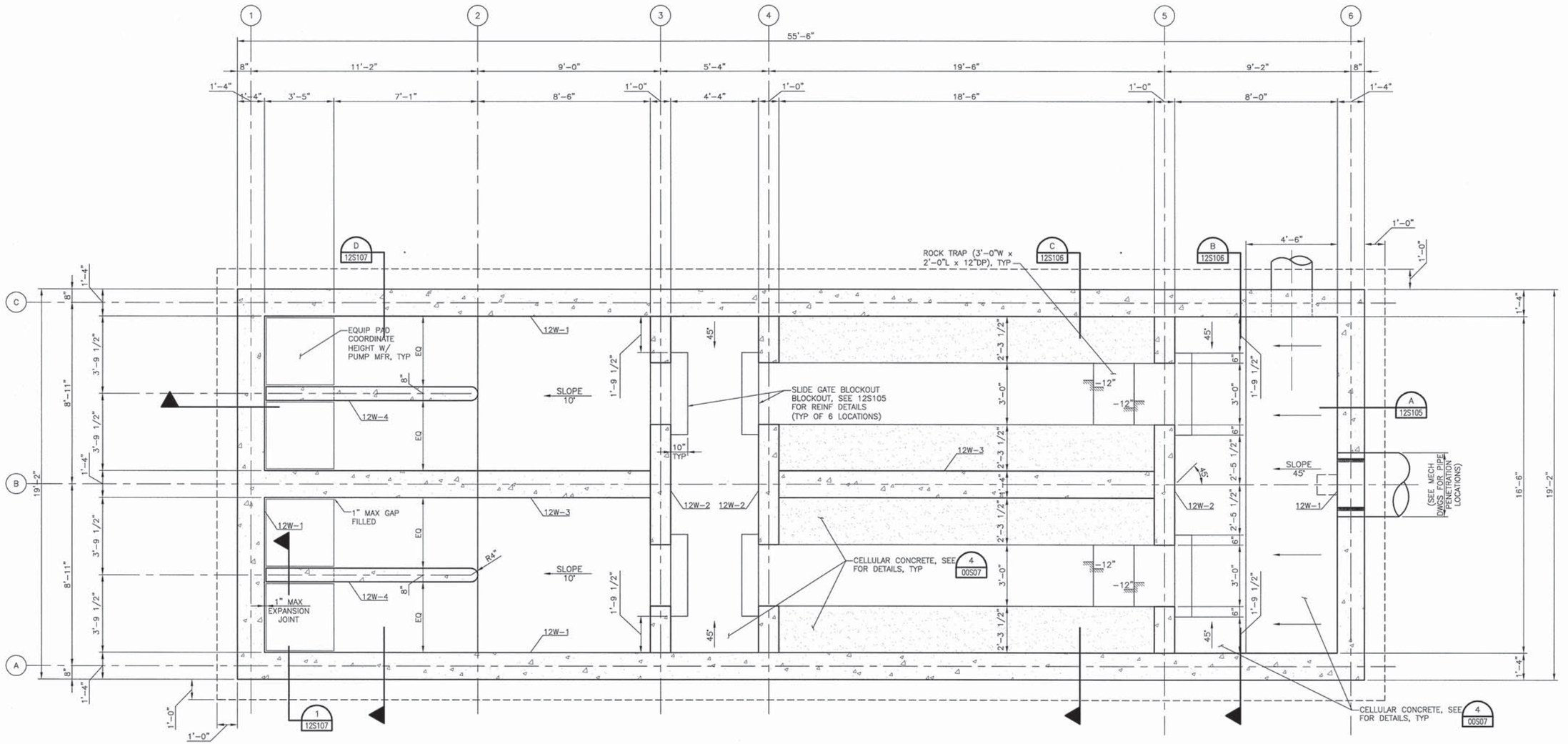

NOTE:
PVC LINER IS REQUIRED FOR THIS STRUCTURE. REFER TO NOTE 10

FOUNDATION PLAN
3/8" = 1'-0"

NOTES:

1. FOR GENERAL NOTES, SEE SHEET 00S01 AND 00S02.
2. FOR SPECIAL INSPECTION REQUIREMENTS, SEE 00S03 AND 00S04.
3. FOR TYPICAL CONCRETE DETAILS, SEE SHEETS 00S05 THRU 00S08.
4. FOR TYPICAL REINFORCING DETAILS, SEE 00S09.
5. FOR TYPICAL CONCRETE BEAM, SLAB, AND WALL DETAILS AND SCHEDULES, SEE SHEETS 00S11 AND 00S12.
6. "12W-X" DENOTES CONCRETE WALL. SEE SHEET 00S11 FOR WALL REINFORCING SCHEDULE.
7. ALL COLUMNS AND WALLS ARE CENTERED ON GRID LINES, UNLESS NOTED OTHERWISE.
8. ALL DIMENSIONS FOR OPENINGS ARE ROUGH OPENING SIZES, UNLESS NOTED OTHERWISE.
9. CONTRACTOR TO COORDINATE/VERIFY THE LOCATION AND SIZES OF ALL OPENINGS WITH PROCESS DRAWINGS.
10. INSTALL PVC LINER TO VERTICAL, SLOPED AND CEILING CONCRETE SURFACES ABOVE ELEVATION 90.66' AND BELOW ELEVATION 109.50'. PVC LINER TO RUN 6" MINIMUM BEHIND CELLULAR CONCRETE FILLETS FROM VERTICAL SURFACES ABOVE CELLULAR CONCRETE. TOP OF CELLULAR CONCRETE SURFACES DO NOT REQUIRE PVC LINER. VERTICAL SURFACES OF CELLULAR CONCRETE DO REQUIRE PVC LINER. CHANNEL FLOORS AT AND BETWEEN ELEVATION 90.66' TO 92.17' DO NOT REQUIRE PVC LINER. SEE SPECIFICATION SECTION 07101 AND DETAILS ON 00SXX.
11. DENOTES CHANGE IN TOP OF CONCRETE ELEVATION.

TRUE NORTH

PROJECT NORTH

FILE: 215786-12S101.dwg
DATE: Jun 30, 2015 - 10:43:57am, ranider

HDR Engineering, Inc.

ISSUE	DATE	DESCRIPTION
A	JUNE 2015	ISSUED FOR BID

PROJECT MANAGER	C. OLSON
DESIGNED	M. MOSTAFA
DESIGNED	
CHECKED	O. TAVANGAR
DRAWN	D. ELDREDGE
DATE	JUNE 30, 2015
PROJECT NUMBER	215786

REGISTERED PROFESSIONAL ENGINEER MOHAMMADREZA MOSTAFA NO. 78649 EXP. 09/30/15 CIVIL STATE OF CALIFORNIA 06/30/15

CITY OF PINOLE CALIFORNIA 1903

PINOLE/HERCULES WATER POLLUTION CONTROL PLANT UPGRADE CLIENT PN

SRUCTURAL

HEADWORKS FOUNDATION PLAN

0 1" 2"

FILENAME	215786-12S101
SCALE	AS NOTED
SHEET	12S101

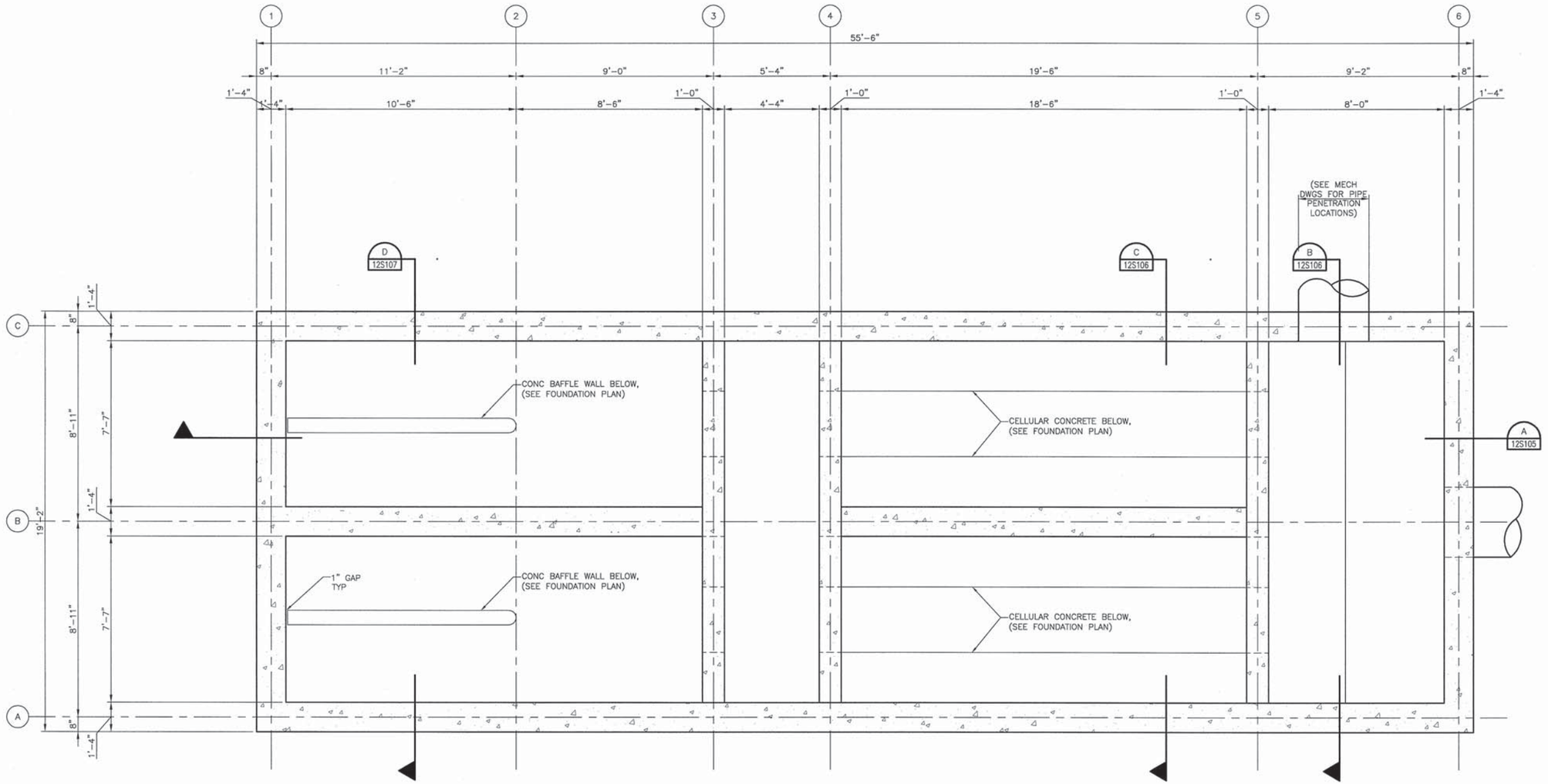

INTERMEDIATE PLAN

3/8" = 1'-0"

NOTES:

1. FOR GENERAL NOTES, SEE SHEET 00S01 AND 00S02.
2. FOR SPECIAL INSPECTION REQUIREMENTS, SEE 00S03 AND 00S04.
3. FOR TYPICAL CONCRETE DETAILS, SEE SHEETS 00S05 THRU 00S08.
4. FOR TYPICAL REINFORCING DETAILS, SEE 00S09.
5. FOR TYPICAL CONCRETE BEAM AND WALL DETAILS AND SCHEDULES, SEE SHEETS 00S11 AND 00S12.
6. ALL COLUMNS AND WALLS ARE CENTERED ON GRID LINES, UNLESS NOTED OTHERWISE.
7. ALL DIMENSIONS FOR OPENINGS ARE ROUGH OPENING SIZES, UNLESS NOTED OTHERWISE.

TRUE NORTH

PROJECT NORTH

FILE: 215786-12S102.dwg
DATE: Jun 30, 2015-10:45:12am, ranider

HDR Engineering, Inc.

ISSUE	DATE	DESCRIPTION
A	JUNE 2015	ISSUED FOR BID

PROJECT MANAGER	C. OLSON
DESIGNED	M. MOSTAFA
DESIGNED	
CHECKED	O. TAVANGAR
DRAWN	D. ELDREDGE
DATE	JUNE 30, 2015
PROJECT NUMBER	215786

REGISTERED PROFESSIONAL ENGINEER MOHAMMADREZA MOSTAFA NO. 78649 EXP. 09/30/15 CIVIL STATE OF CALIFORNIA 06/30/15

CITY OF PINOLE CALIFORNIA 1903

PINOLE/HERCULES WATER POLLUTION CONTROL PLANT UPGRADE CLIENT PN

STRUCTURAL

HEADWORKS INTERMEDIATE PLAN

0 1" 2"

FILENAME	215786-12S102
SCALE	AS NOTED

SHEET **12S102**

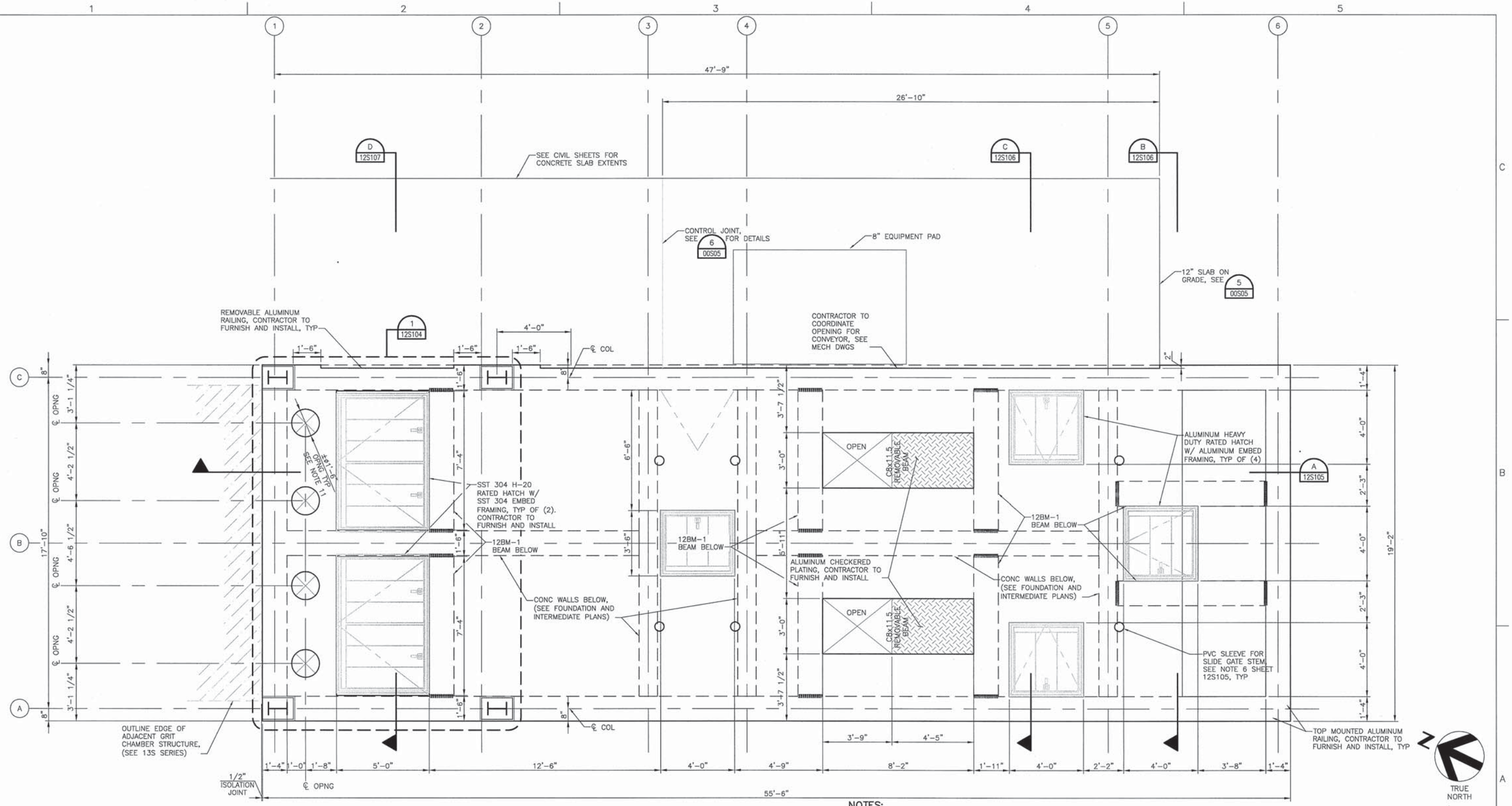

TOP PLAN

3/8" = 1'-0"

NOTES:

1. FOR GENERAL NOTES, SEE SHEET 00S01 AND 00S02.
2. FOR SPECIAL INSPECTION REQUIREMENTS, SEE 00S03 AND 00S04.
3. FOR TYPICAL CONCRETE DETAILS, SEE SHEETS 00S05 THRU 00S08.
4. FOR TYPICAL REINFORCING DETAILS, SEE 00S09.
5. FOR TYPICAL CONCRETE SLAB SEE SHEETS 12S105 AND 12S106.
6. FOR TYPICAL GRATING/CHECKERED PLATE DETAILS, SEE SHEET 00S18.
7. FOR TYPICAL RAILING DETAILS, SEE SHEET 00S19 AND 00S20.
8. ALL COLUMNS AND WALLS ARE CENTERED ON GRID LINES, UNLESS NOTED OTHERWISE.
9. ALL DIMENSIONS FOR OPENINGS ARE ROUGH OPENING SIZES, UNLESS NOTED OTHERWISE.
10. "12B-X" DENOTES CONCRETE BEAM. SEE SHEET 00S12 FOR DETAILS AND SCHEDULE.
11. CONTRACTOR TO COORDINATE/VERIFY THE LOCATION AND SIZES OF ALL OPENINGS WITH PROCESS DRAWINGS.

TRUE NORTH

PROJECT NORTH

FILE: 215786-12S103.dwg
DATE: Jun 30, 2015-11:06:53am, ranider

HDR Engineering, Inc.

ISSUE	DATE	DESCRIPTION
A	JUNE 2015	ISSUED FOR BID

PROJECT MANAGER	C. OLSON
DESIGNED	M. MOSTAFA
DESIGNED	
CHECKED	O. TAVANGAR
DRAWN	D. ELDREDGE
DATE	JUNE 30, 2015
PROJECT NUMBER	215786

REGISTERED PROFESSIONAL ENGINEER MOHAMMADREZA MOSTAFA NO. 78649 EXP. 09/30/15 CIVIL STATE OF CALIFORNIA 06/30/15

CITY OF PINOLE CALIFORNIA 1903

PINOLE/HERCULES WATER POLLUTION CONTROL PLANT UPGRADE CLIENT PN

STRUCTURAL

HEADWORKS TOP PLAN

0 1" 2"

FILENAME	215786-12S103
SCALE	AS NOTED

SHEET **12S103**

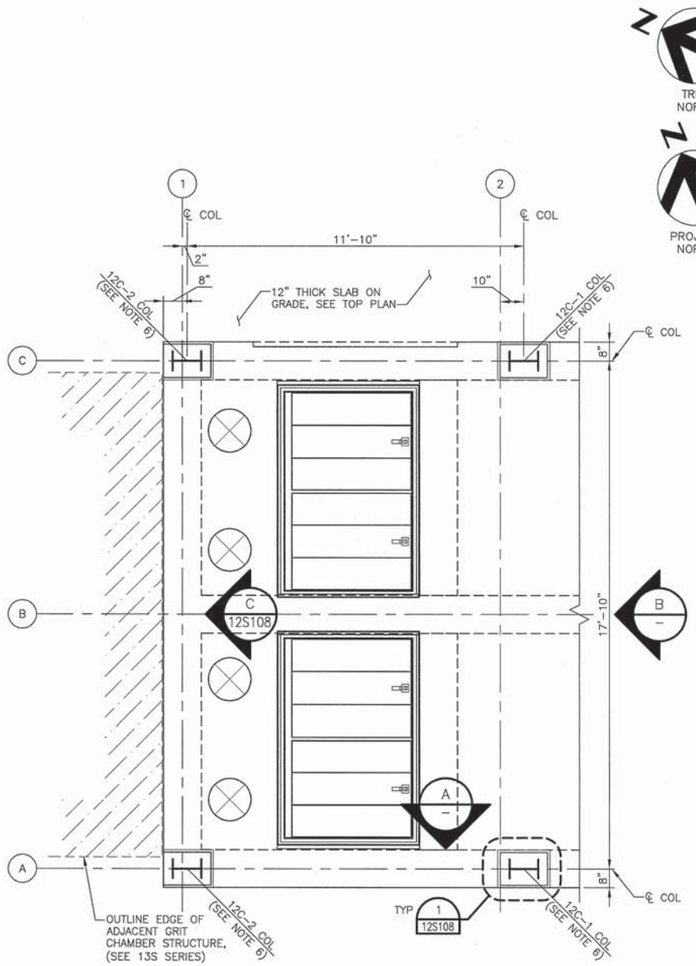

MONORAIL COL PLAN

3/8" = 1'–0"

1 12S103

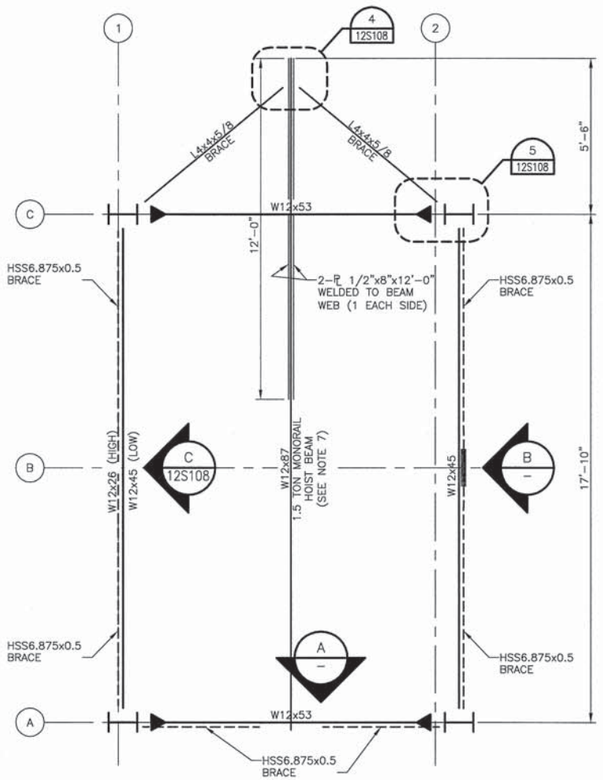

MONORAIL FRAMING PLAN

3/8" = 1'–0"

2 –

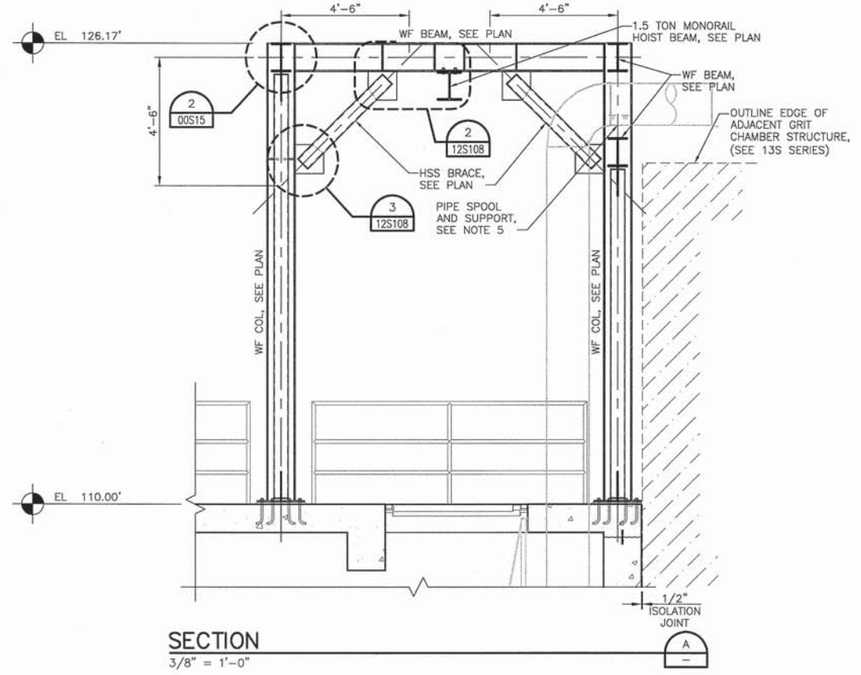

SECTION

3/8" = 1'–0"

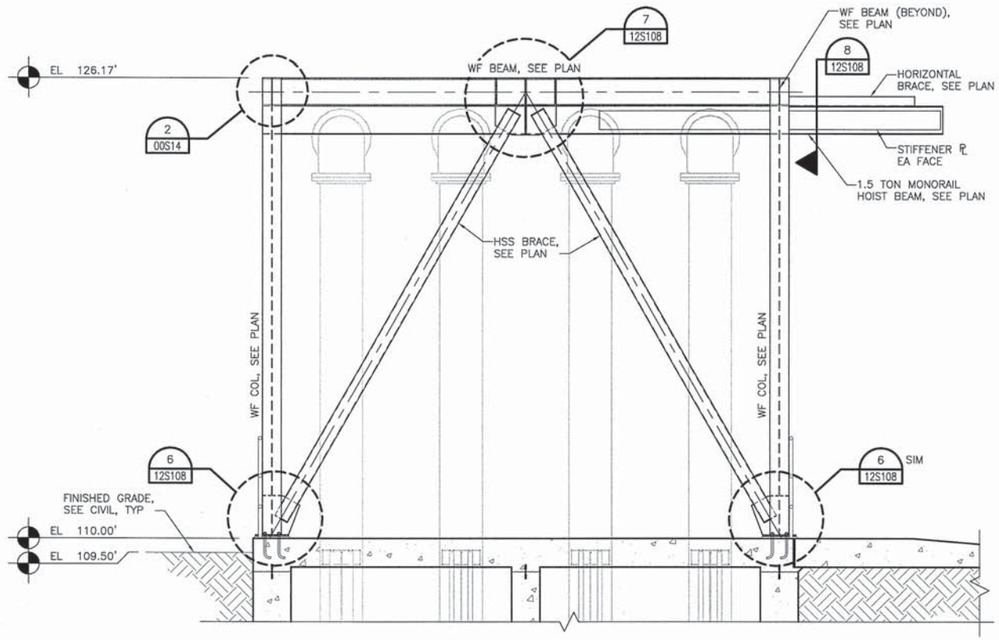

SECTION

3/8" = 1'–0"

B –

NOTES:

1. FOR MONORAIL CRANE TROLLEY AND HOIST SEE MANUFACTURER'S DRAWINGS AND SPECIFICATIONS.
2. THE DESIGN OF THE MONORAIL FRAMING IS BASED UPON THE CAPACITY OF A 3,000 LBS CRANE.
3. FOR CONCRETE WALL SCHEDULE SEE 00S11.
4. FOR CONCRETE SLAB REINFORCEMENT SEE 12S105.
5. DENOTES RIGID CONNECTION, SEE 2/00S10 FOR DETAILS.
6. 12C–X COL — DENOTES STEEL COLUMN. SEE COLUMN SCHEDULE FOR COLUMN TYPE AND SIZE ON 5/00S14.
7. 1.5 TON UNDERHUNG MONORAIL CRANE GIRDER.
8. COORDINATE FINAL BEAM ELEVATION FOR PIPE SUPPORT WITH PROCESS DRAWINGS.

FILE: 215786–12S104.dwg
DATE: Jun 30, 2015–10:51:42am, ranider

HDR Engineering, Inc.

ISSUE	DATE	DESCRIPTION
A	JUNE 2015	ISSUED FOR BID

PROJECT MANAGER	C. OLSON
DESIGNED	M. MOSTAFA
DESIGNED	
CHECKED	O. TAVANGAR
DRAWN	D. ELDREDGE
DATE	JUNE 30, 2015
PROJECT NUMBER	215786

REGISTERED PROFESSIONAL ENGINEER — MOHAMMADREZA MOSTAFA — NO. 78649 EXP. 09/30/15 — CIVIL — STATE OF CALIFORNIA — 06/30/15

CITY OF PINOLE CALIFORNIA 1903

PINOLE/HERCULES WATER POLLUTION CONTROL PLANT UPGRADE
CLIENT PN

STRUCTURAL

HEADWORKS - MONORAIL FRAMING PLAN AND SECTIONS

0 1" 2"

FILENAME	215786–12S104
SCALE	AS NOTED
SHEET	12S104

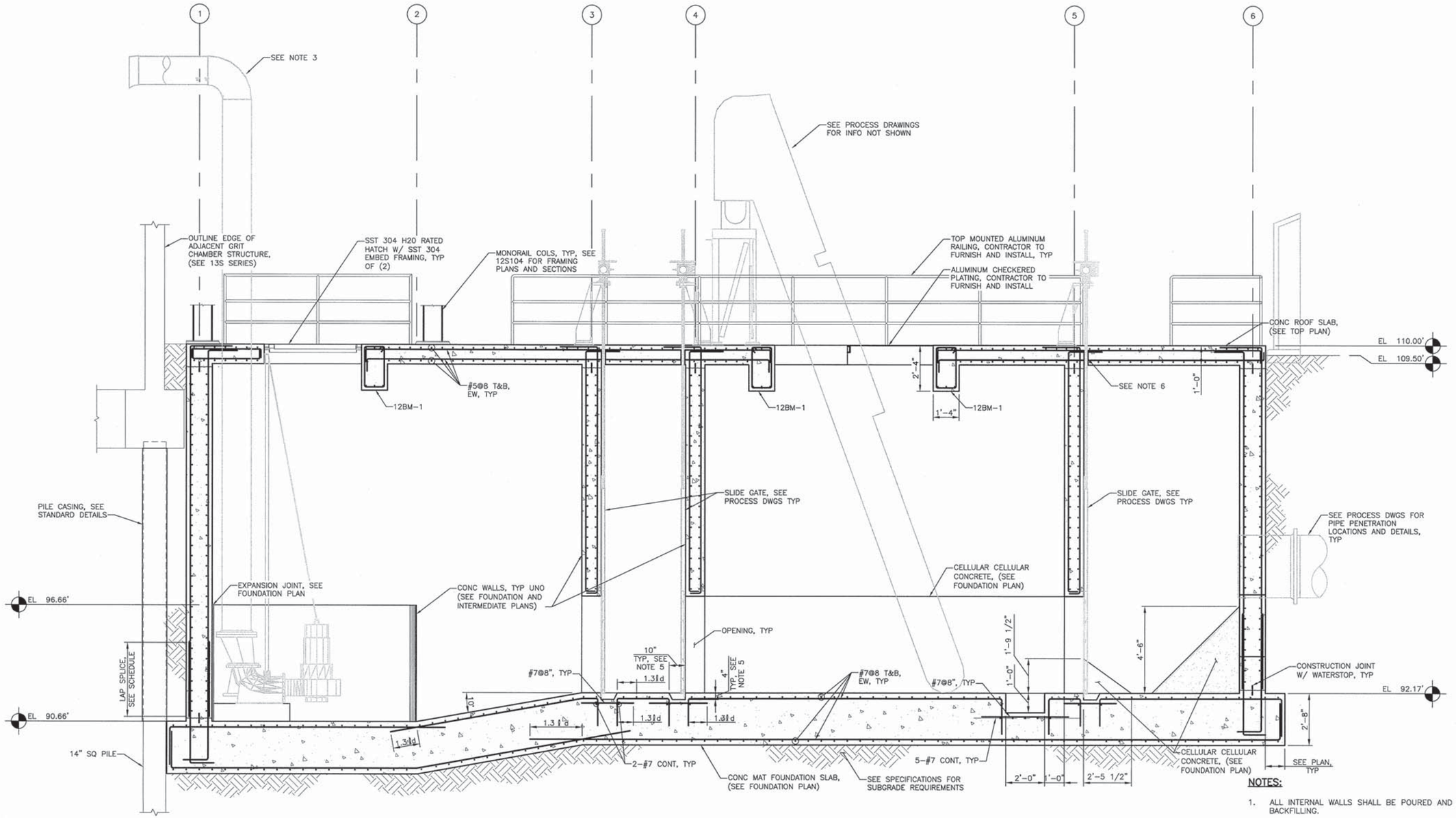

SECTION

SCALE: 3/8" = 1'-0"

A / 12S101

NOTES:

1. ALL INTERNAL WALLS SHALL BE POURED AND SET PRIOR TO BACKFILLING.
2. FOR WALL MARKS AND WALL SCHEDULE SEE 12S101 AND 00S11.
3. FOR PIPE CONNECTIONS, EQUIPMENT AND DETAILS SEE MECHANICAL DRAWINGS.
4. FOR CELLULAR CONCRETE SEE SPECIFICATIONS.
5. CONTRACTOR TO VERIFY THE SIZE OF THE BLOCKOUT WITH THE GATE MANUFACTURER PRIOR TO CONCRETE POUR.
6. PROVIDE PVC SLEEVES FOR SLIDE GATE STEM PENETRATIONS. CORE DRILLING NOT PERMITTED TYPICAL ALL SLIDE GATE STEM PENETRATIONS.

FILE: 215786-12S105.dwg
DATE: Jun 30, 2015-8:37:23am, jwebb

HDR Engineering, Inc.

ISSUE	DATE	DESCRIPTION
A	JUNE 2015	ISSUED FOR BID

PROJECT MANAGER	C. OLSON
DESIGNED	M. MOSTAFA
DESIGNED	
CHECKED	O. TAVANGAR
DRAWN	D. ELDREDGE
DATE	JUNE 30, 2015
PROJECT NUMBER	215786

REGISTERED PROFESSIONAL ENGINEER MOHAMMADREZA MOSTAFA NO. 78649 EXP. 09/30/15 CIVIL STATE OF CALIFORNIA 06/30/15

CITY OF PINOLE CALIFORNIA 1903

PINOLE/HERCULES WATER POLLUTION CONTROL PLANT UPGRADE
CLIENT PN

STRUCTURAL

HEADWORKS SECTIONS - 1

0 1" 2"

FILENAME	215786-12S105
SCALE	AS NOTED

SHEET **12S105**

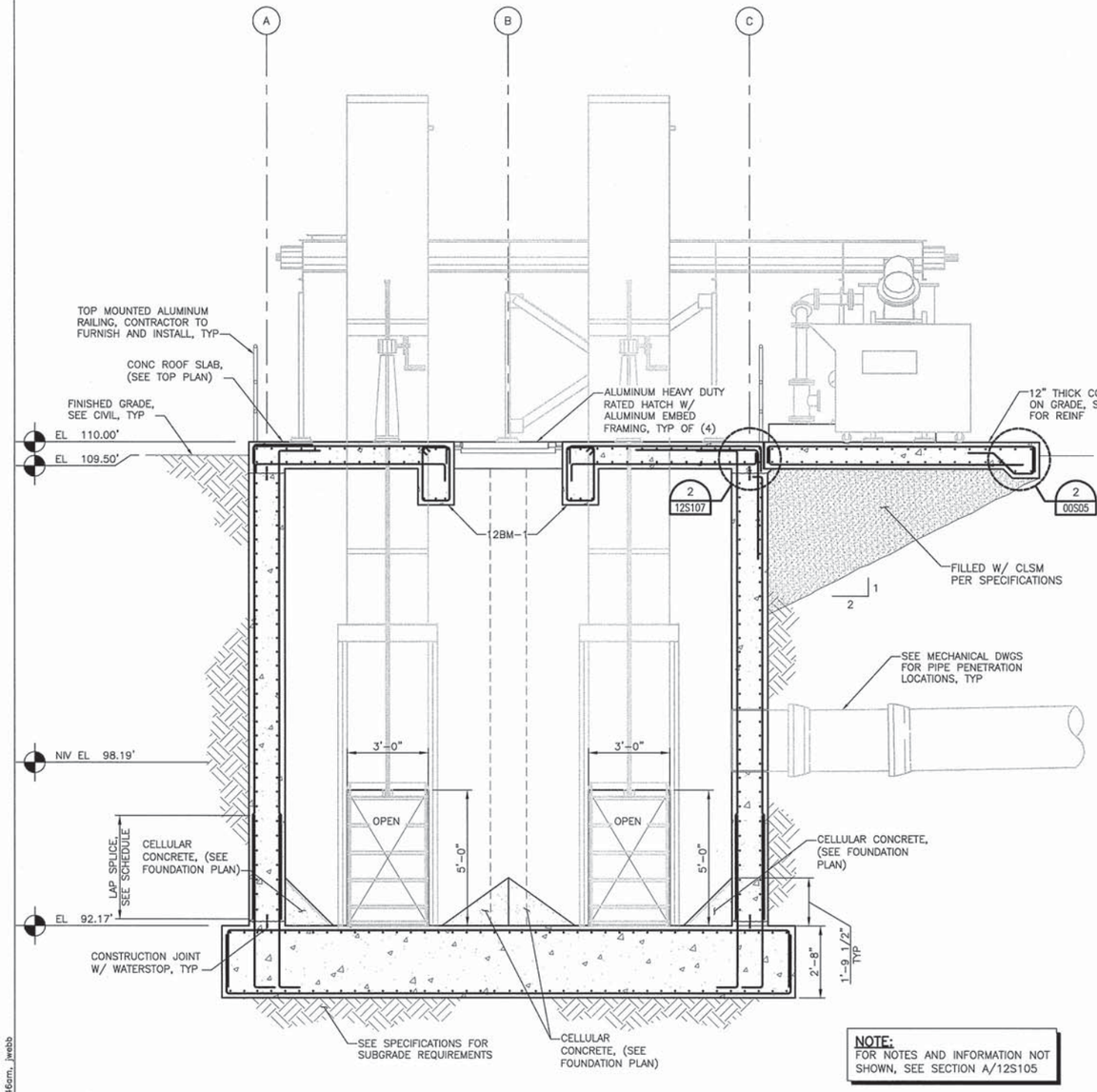

NOTE:
FOR NOTES AND INFORMATION NOT SHOWN, SEE SECTION A/12S105

SECTION
3/8" = 1'-0"
B
12S101

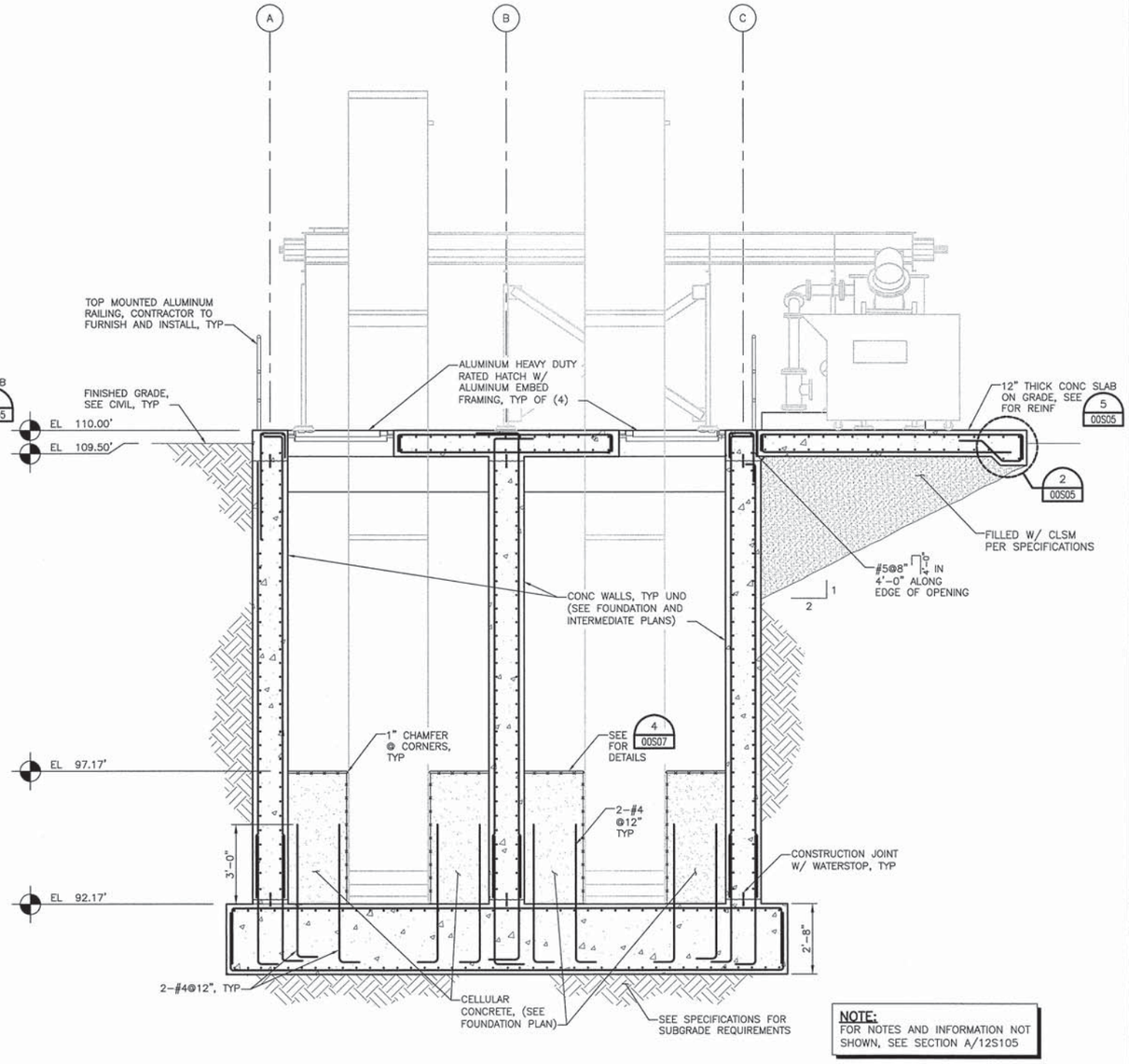

NOTE:
FOR NOTES AND INFORMATION NOT SHOWN, SEE SECTION A/12S105

SECTION
3/8" = 1'-0"
C
12S101

FILE: 215786-12S106.dwg
DATE: Jun 30, 2015 - 8:37:46am, jwebb

HDR
HDR Engineering, Inc.

ISSUE	DATE	DESCRIPTION
A	JUNE 2015	ISSUED FOR BID

PROJECT MANAGER	C. OLSON
DESIGNED	M. MOSTAFA
DESIGNED	
CHECKED	O. TAVANGAR
DRAWN	D. ELDREDGE
DATE	JUNE 30, 2015
PROJECT NUMBER	215786

REGISTERED PROFESSIONAL ENGINEER
MOHAMMADREZA MOSTAFA
NO. 78649
EXP. 09/30/15
CIVIL
STATE OF CALIFORNIA
06/30/15

CITY OF PINOLE CALIFORNIA 1903

PINOLE/HERCULES
WATER POLLUTION
CONTROL PLANT UPGRADE
CLIENT PN

STRUCTURAL

HEADWORKS SECTIONS - 2

0 1" 2"

FILENAME	215786-12S106
SCALE	AS NOTED

SHEET
12S106

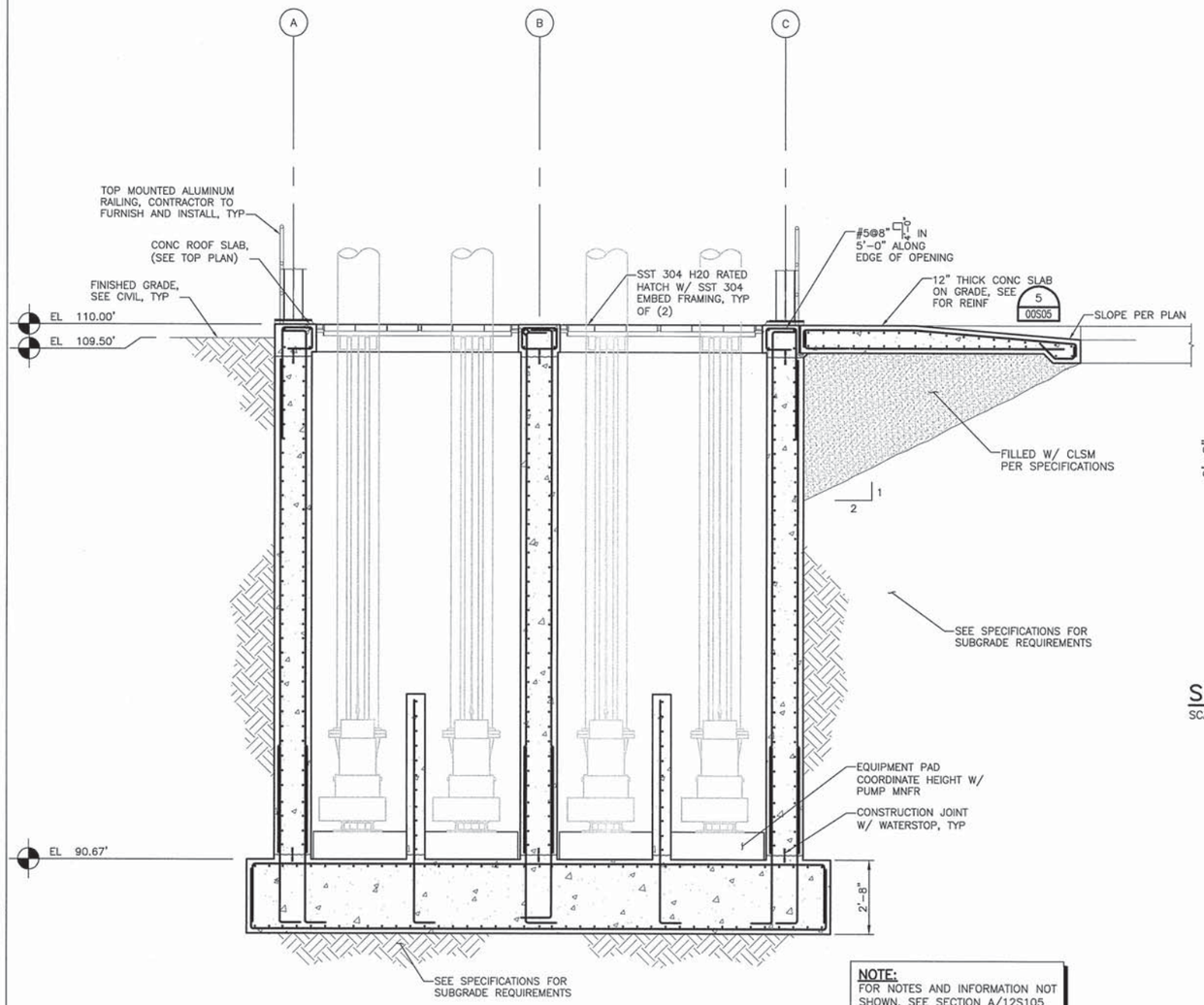

NOTE:
FOR NOTES AND INFORMATION NOT SHOWN, SEE SECTION A/12S105

SECTION
3/8" = 1'-0"
D
12S101

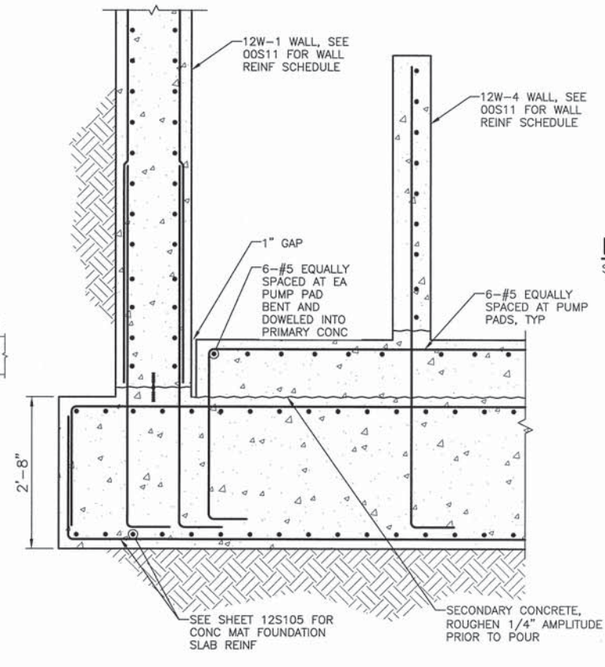

SECTION
SCALE: 3/4"=1'-0"
1
12S101

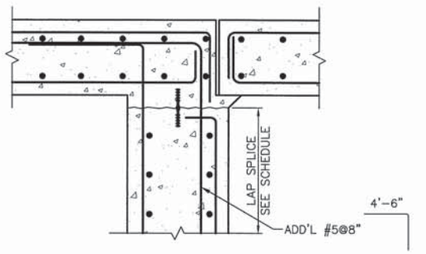

NOTE:
FOR INFORMATION NOT SHOWN, SEE SECTION B/12S106

DETAIL
SCALE:1"=1'-0"
2
12S106

FILE: 215786-12S107.dwg
DATE: Jun 30, 2015-8:36:10am, jwebb

HDR
HDR Engineering, Inc.

ISSUE	DATE	DESCRIPTION
A	JUNE 2015	ISSUED FOR BID

PROJECT MANAGER	C. OLSON
DESIGNED	M. MOSTAFA
DESIGNED	
CHECKED	O. TAVANGAR
DRAWN	D. ELDREDGE
DATE	JUNE 30, 2015
PROJECT NUMBER	215786

REGISTERED PROFESSIONAL ENGINEER MOHAMMADREZA MOSTAFA NO. 78649 EXP. 09/30/15 CIVIL STATE OF CALIFORNIA
06/30/15

CITY OF PINOLE CALIFORNIA 1903

PINOLE/HERCULES
WATER POLLUTION
CONTROL PLANT UPGRADE
CLIENT PN

STRUCTURAL

HEADWORKS SECTIONS - 3

0 1" 2"

FILENAME	215786-12S107
SCALE	AS NOTED

SHEET
12S107

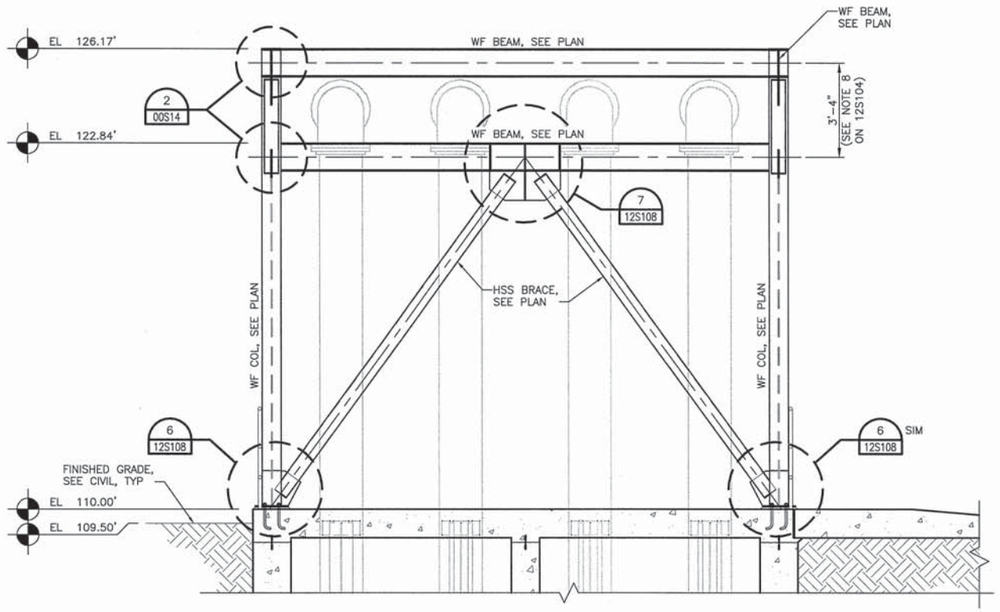

SECTION

3/8" = 1'-0"

C

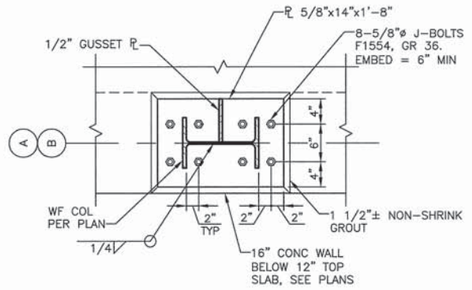

BASE PLATE DETAIL (TYP)

SCALE: 1"=1'-0"

1 12S104

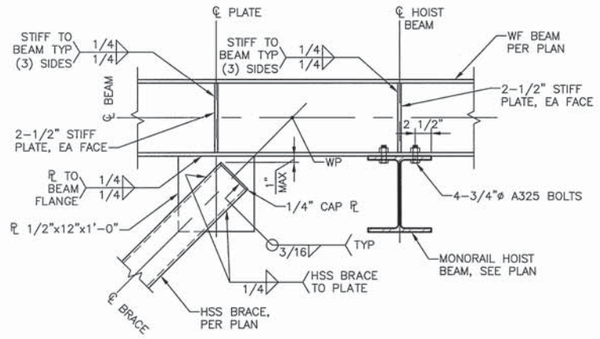

BRACE TO BEAM CONN

SCALE: 1"=1'-0"

2 12S104

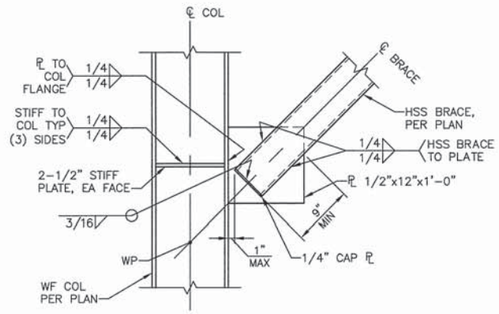

BRACE TO COL CONN

SCALE: 1"=1'-0"

3 12S104

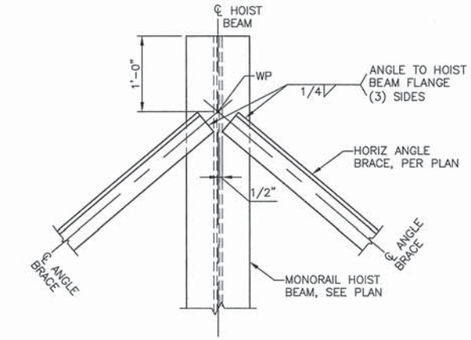

HORIZ BRACE TO HOIST BEAM CONN

SCALE: 1"=1'-0"

4 12S104

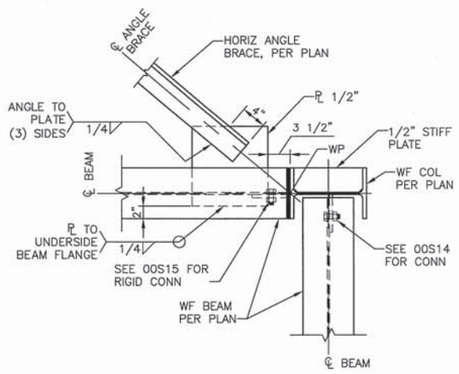

HORIZ BRACE TO BEAM CONN

SCALE: 1"=1'-0"

5 12S104

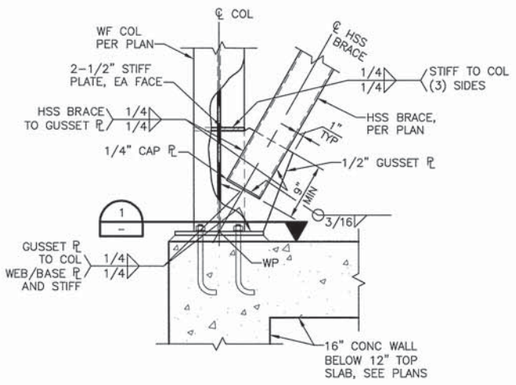

BRACE TO COL CONN

SCALE: 1"=1'-0"

6 12S104

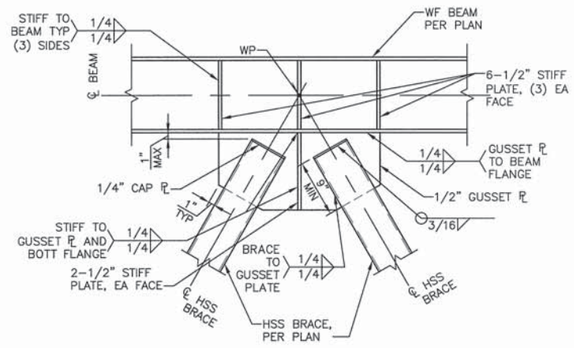

BRACE TO BEAM CONN

SCALE: 1"=1'-0"

7 12S104

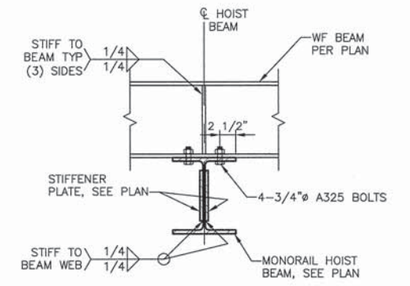

STIFFENER PLATE TO BEAM CONN

SCALE: 1"=1'-0"

8 12S104

FILE: 215786-12S108.dwg
DATE: Jun 30, 2015 - 8:38:36am, jwebb

HDR Engineering, Inc.

ISSUE	DATE	DESCRIPTION
A	JUNE 2015	ISSUED FOR BID

PROJECT MANAGER	C. OLSON
DESIGNED	M. MOSTAFA
DESIGNED	
CHECKED	O. TAVANGAR
DRAWN	D. ELDREDGE
DATE	JUNE 30, 2015
PROJECT NUMBER	215786

REGISTERED PROFESSIONAL ENGINEER MOHAMMADREZA MOSTAFA NO. 78649 EXP. 09/30/15 CIVIL STATE OF CALIFORNIA
06/30/15

CITY OF PINOLE CALIFORNIA 1903

PINOLE/HERCULES
WATER POLLUTION
CONTROL PLANT UPGRADE
CLIENT PN

STRUCTURAL

HEADWORKS SECTIONS AND DETAILS

0 1" 2"

FILENAME	215786-12S108
SCALE	AS NOTED

SHEET 12S108

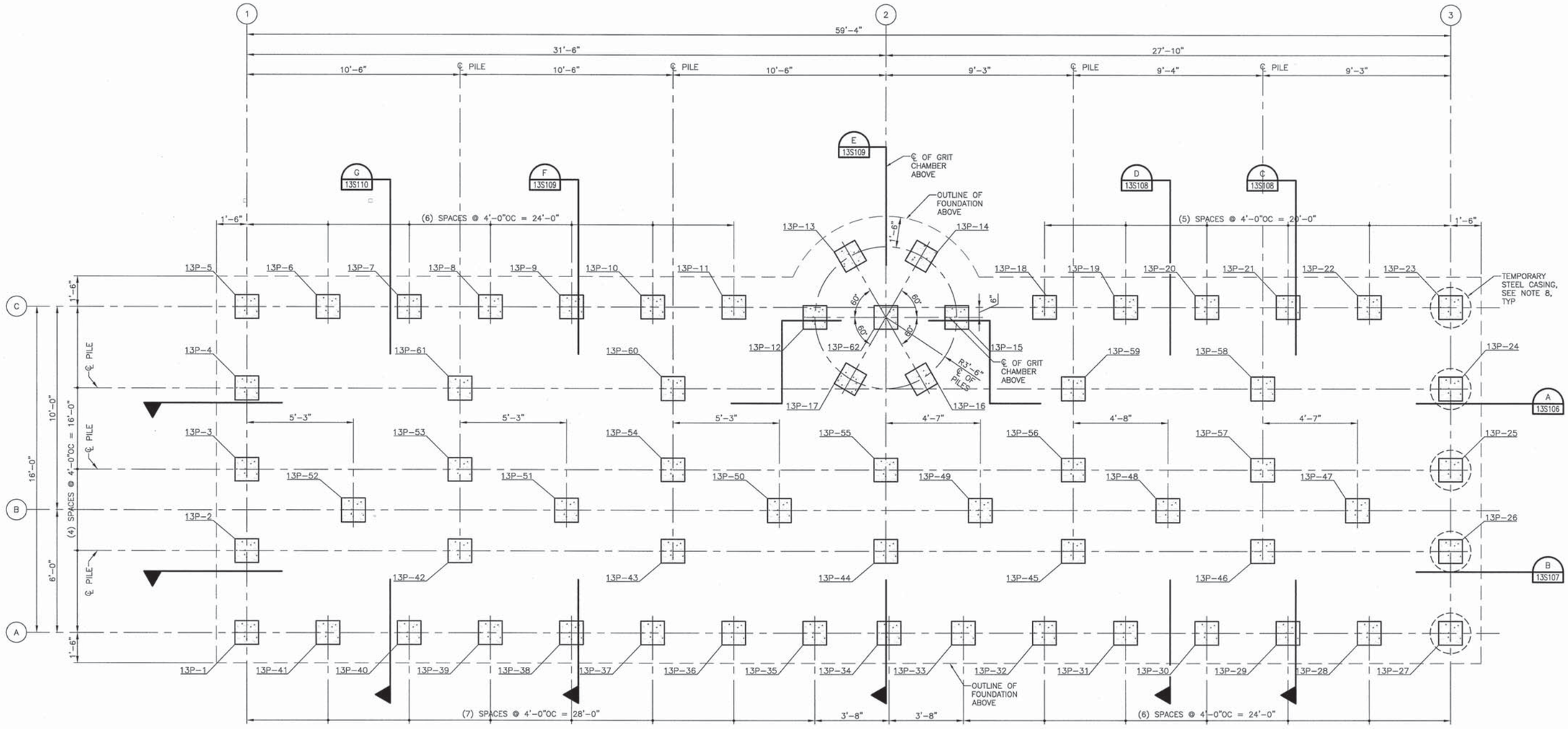

PILE LAYOUT PLAN

3/8" = 1'-0"

NOTES:

1. FOR GENERAL NOTES, SEE SHEET 00S01 AND 00S02.
2. FOR SPECIAL INSPECTION REQUIREMENTS, SEE 00S03 AND 00S04.
3. FOR TYPICAL CONCRETE DETAILS, SEE SHEETS 00S05 THRU 00S08.
4. FOR TYPICAL REINFORCING DETAILS, SEE 00S09.
5. FOR TYPICAL PILE DETAILS AND SCHEDULE, SEE SHEET 00S10.
6. "13P-X" DENOTES 14" SQUARE PRESTRESSED PRECAST CONCRETE PILES. SEE SHEET 00S10 FOR DETAILS AND SCHEDULE.
7. ALL COLUMNS, WALLS, PILES, AND PILECAPS ARE CENTERED ON GRID LINES, UNLESS NOTED OTHERWISE.
8. FOR PROTECTION OF ADJACENT FOUNDATION, PILES 13P-23 THROUGH 13P-27 SHALL BE DRIVEN THROUGH STEEL CASINGS EXTENDING FROM TOP OF SUBGRADE DOWN TO BOTTOM OF HEADWORKS STRUCTURE FOUNDATION. AFTER PILE INSTALLATION, CASINGS SHALL BE REMOVED AND VOID FILLED WITH LOW DENSITY CONCRETE FILL.

TRUE NORTH

PROJECT NORTH

FILE: 215786-13S101.dwg
DATE: Jun 30, 2015 - 1:04:56pm, rsnider

HDR Engineering, Inc.

ISSUE	DATE	DESCRIPTION
A	JUNE 2015	ISSUED FOR BID

PROJECT MANAGER	C. OLSON
DESIGNED	M. MOSTAFA
DESIGNED	
CHECKED	O. TAVANGAR
DRAWN	D. ELDREDGE
DATE	JUNE 30, 2015
PROJECT NUMBER	215786

REGISTERED PROFESSIONAL ENGINEER MOHAMMADREZA MOSTAFA NO. 78649 EXP. 09/30/15 CIVIL STATE OF CALIFORNIA 06/30/15

CITY OF PINOLE CALIFORNIA 1903

PINOLE/HERCULES WATER POLLUTION CONTROL PLANT UPGRADE
CLIENT PN

STRUCTURAL

GRIT REMOVAL PILE LAYOUT PLAN

0 1" 2"

FILENAME	215786-13S101
SCALE	AS NOTED

SHEET 13S101

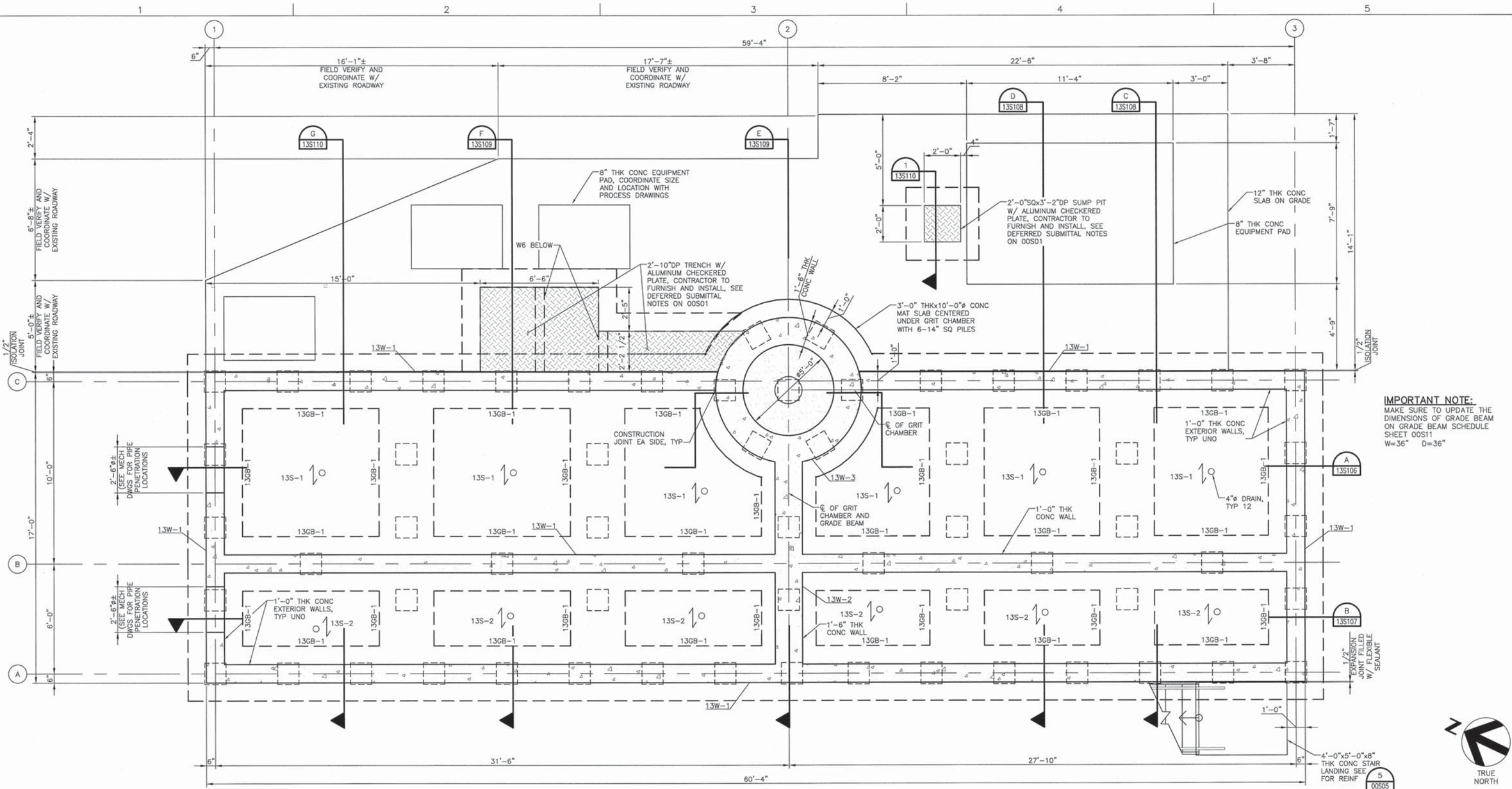

NOTE:
PVC LINER IS REQUIRED FOR THIS STRUCTURE. REFER TO NOTE 10

NOTES:

1. FOR GENERAL NOTES, SEE SHEET 00S01 AND 00S02.
2. FOR SPECIAL INSPECTION REQUIREMENTS, SEE 00S03 AND 00S04.
3. FOR TYPICAL CONCRETE DETAILS, SEE SHEETS 00S05 THRU 00S08.
4. FOR TYPICAL REINFORCING DETAILS, SEE 00S09.
5. FOR TYPICAL CONCRETE BEAM, SLAB, AND WALL DETAILS AND SCHEDULES, SEE SHEETS 00S11 AND 00S12.
6. "13GB-X" DENOTES CONCRETE GRADE BEAM. SEE SHEET 00S11 FOR DETAILS AND SCHEDULE.
7. "13W-X" DENOTES CONCRETE WALL. SEE SHEET 00S11 FOR WALL REINFORCING SCHEDULE.
8. ALL COLUMNS, WALLS, PILES, AND PILECAPS ARE CENTERED ON GRID LINES, UNLESS NOTED OTHERWISE.
9. ALL DIMENSIONS FOR OPENINGS ARE ROUGH OPENING SIZES, UNLESS NOTED OTHERWISE. CONTRACTOR TO VERIFY LOCATIONS AND SIZE OF OPENINGS WITH PROCESS DRAWINGS, TYPICAL.
10. INSTALL PVC LINER TO VERTICAL, SLOPED AND CEILING CONCRETE SURFACES ABOVE ELEVATION 90.66' AND BELOW ELEVATION 115.75'. PVC LINER TO RUN 6" MINIMUM BEHIND CELLULAR CONCRETE FILLETS FROM VERTICAL SURFACES ABOVE CELLULAR CONCRETE. TOP OF CELLULAR CONCRETE SURFACES DO NOT REQUIRE PVC LINER. VERTICAL SURFACES OF CELLULAR CONCRETE DO REQUIRE PVC LINER. CHANNEL FLOORS AT AND BETWEEN ELEVATION 90.66' TO 92.17' DO NOT REQUIRE PVC LINER. SEE SPECIFICATION SECTION 07101 AND DETAILS ON 00SXX.

IMPORTANT NOTE:
MAKE SURE TO UPDATE THE DIMENSIONS OF GRADE BEAM ON GRADE BEAM SCHEDULE SHEET 00S11
W=36" D=36"

TRUE NORTH

PROJECT NORTH

FOUNDATION PLAN
3/8" = 1'-0"

FILE: 215786-13S102.dwg
DATE: Jun 30, 2015-1:05:54pm, ranider

HDR Engineering, Inc.

ISSUE	DATE	DESCRIPTION
A	JUNE 2015	ISSUED FOR BID

PROJECT MANAGER	C. OLSON
DESIGNED	M. MOSTAFA
DESIGNED	
CHECKED	O. TAVANGAR
DRAWN	D. ELDREDGE
DATE	JUNE 30, 2015
PROJECT NUMBER	215786

REGISTERED PROFESSIONAL ENGINEER MOHAMMADREZA MOSTAFA NO. 78649 EXP. 09/30/15 CIVIL STATE OF CALIFORNIA 06/30/15

CITY OF PINOLE CALIFORNIA 1903

PINOLE/HERCULES WATER POLLUTION CONTROL PLANT UPGRADE CLIENT PN

STRUCTURAL

GRIT REMOVAL FOUNDATION PLAN

0 1" 2"

FILENAME	215786-13S102
SCALE	AS NOTED

SHEET 13S102

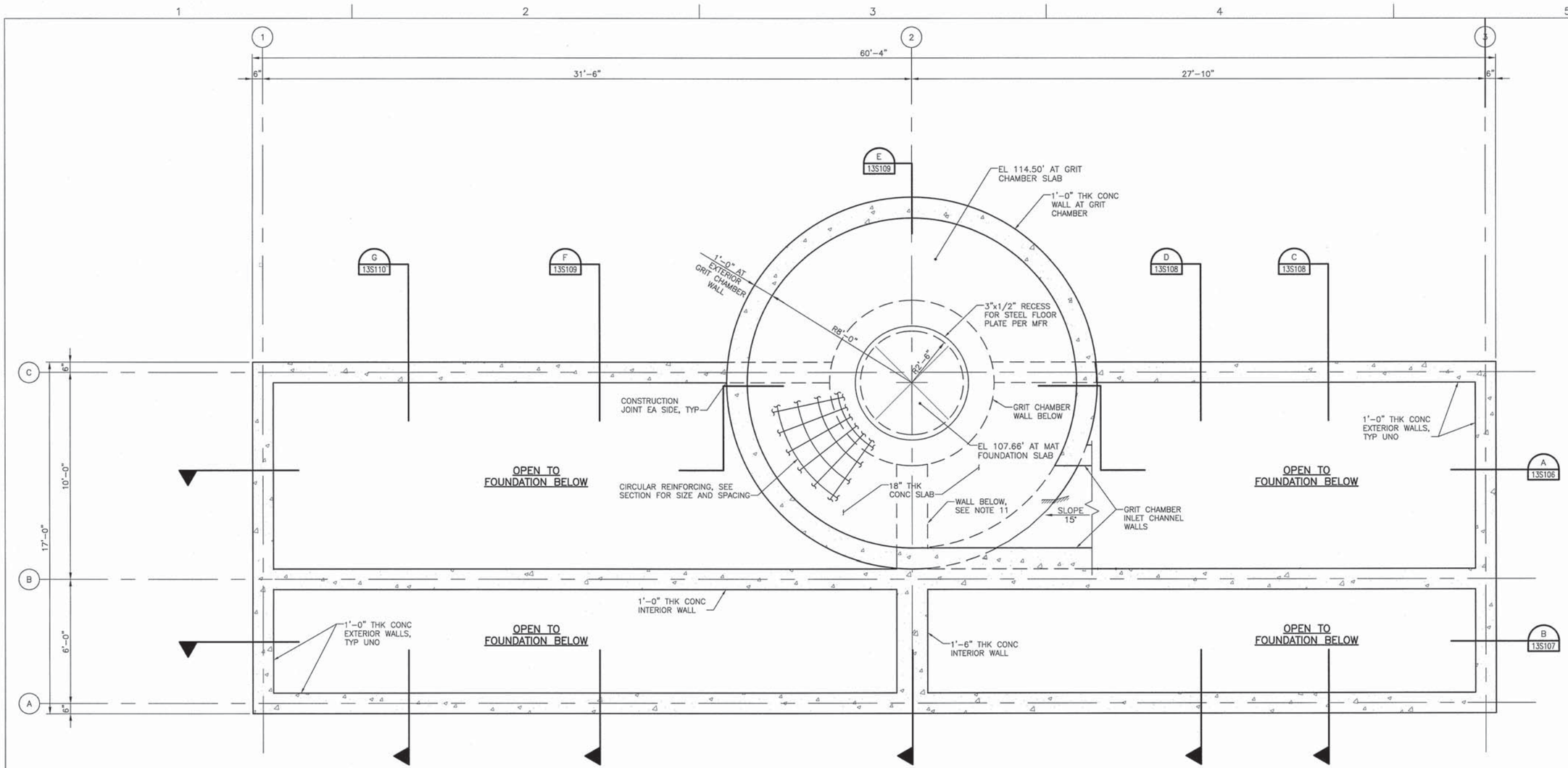

NOTES:

1. FOR GENERAL NOTES, SEE SHEET 00S01 AND 00S02.
2. FOR SPECIAL INSPECTION REQUIREMENTS, SEE 00S03 AND 00S04.
3. FOR TYPICAL CONCRETE DETAILS, SEE SHEETS 00S05 THRU 00S08.
4. FOR TYPICAL REINFORCING DETAILS, SEE 00S09.
5. DENOTES CHANGE ELEVATION (SLOPE UP).
6. "13W-X" DENOTES CONCRETE WALL. SEE SHEET 00S11 FOR WALL REINFORCING SCHEDULE.
7. FOR TYPICAL CONCRETE BEAM, SLAB, AND WALL DETAILS AND SCHEDULES, SEE SHEETS 00S11 AND 00S12.
8. ALL COLUMNS, WALLS, PILES, AND PILECAPS ARE CENTERED ON GRID LINES, UNLESS NOTED OTHERWISE.
9. ALL DIMENSIONS FOR OPENINGS ARE ROUGH OPENING SIZES, UNLESS NOTED OTHERWISE.
10. INSTALL PVC LINER TO VERTICAL, SLOPED AND CEILING CONCRETE SURFACES ABOVE ELEVATION 115.75' AND BELOW ELEVATION 122.00'. PVC LINER TO RUN 6" MINIMUM BEHIND CELLULAR CONCRETE FILLETS FROM VERTICAL SURFACES ABOVE CELLULAR CONCRETE. TOP OF CELLULAR CONCRETE SURFACES DO NOT REQUIRE PVC LINER. VERTICAL SURFACES OF CELLULAR CONCRETE DO REQUIRE PVC LINER. CHANNEL FLOORS AT AND BETWEEN ELEVATION 115.75' TO 117.42' DO NOT REQUIRE PVC LINER. SEE SPECIFICATION SECTION 07101 AND DETAILS ON 00SXX.
11. THE WALL REBAR IS DOWELED INTO THE SLAB OF THE GRIT CHAMBER.

TRUE NORTH

PROJECT NORTH

INTERMEDIATE PLAN – @ EL 114.50'

3/8" = 1'-0"

FILE: 215786-13S103.dwg
DATE: Jun 30, 2015-1:09:03pm, rsnider

HDR Engineering, Inc.

ISSUE	DATE	DESCRIPTION
A	JUNE 2015	ISSUED FOR BID

PROJECT MANAGER	C. OLSON
DESIGNED	M. MOSTAFA
DESIGNED	
CHECKED	O. TAVANGAR
DRAWN	D. ELDREDGE
DATE	JUNE 30, 2015
PROJECT NUMBER	215786

REGISTERED PROFESSIONAL ENGINEER MOHAMMADREZA MOSTAFA NO. 78649 EXP. 09/30/15 CIVIL STATE OF CALIFORNIA 06/30/15

CITY OF PINOLE CALIFORNIA 1903

PINOLE/HERCULES
WATER POLLUTION
CONTROL PLANT UPGRADE
CLIENT PN

STRUCTURAL

GRIT REMOVAL
INTERMEDIATE PLAN - AT ELEVATION 114.50'

0 1" 2"

FILENAME	215786-13S103
SCALE	AS NOTED

SHEET 13S103

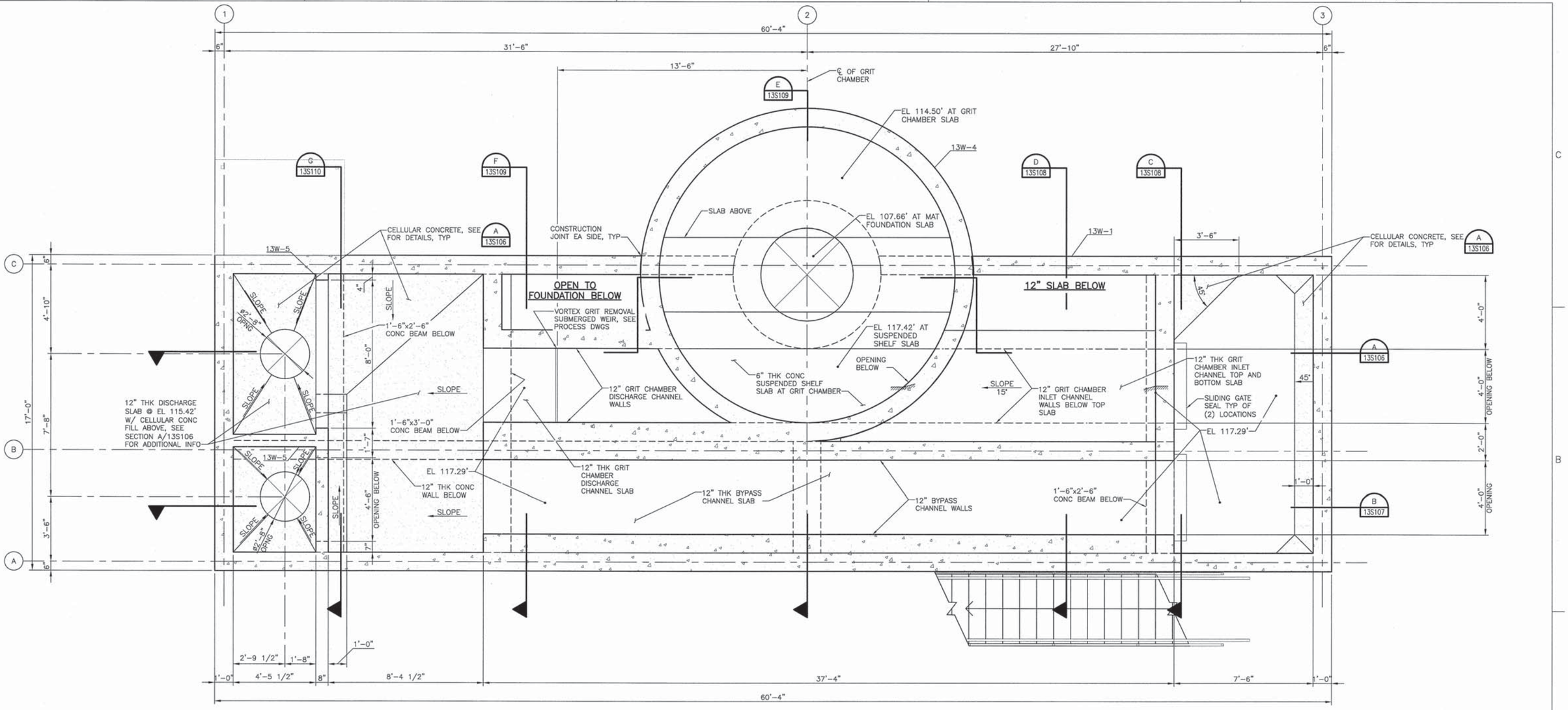

INTERMEDIATE PLAN – @ EL 121.00'

3/8" = 1'-0"

NOTES:

1. FOR GENERAL NOTES, SEE SHEET 00S01 AND 00S02.
2. FOR SPECIAL INSPECTION REQUIREMENTS, SEE 00S03 AND 00S04.
3. FOR TYPICAL CONCRETE DETAILS, SEE SHEETS 00S05 THRU 00S08.
4. FOR TYPICAL REINFORCING DETAILS, SEE 00S09.
5. DENOTES CHANGE ELEVATION (SLOPE UP).
6. DENOTES CHANGE ELEVATION (SLOPE DOWN).
7. "13W-X" DENOTES CONCRETE WALL. SEE SHEET 00S11 FOR WALL REINFORCING SCHEDULE.
8. FOR TYPICAL CONCRETE BEAM, SLAB, AND WALL DETAILS AND SCHEDULES, SEE SHEETS 00S11 AND 00S12.
9. ALL COLUMNS, WALLS, PILES, AND PILECAPS ARE CENTERED ON GRID LINES, UNLESS NOTED OTHERWISE.
10. ALL DIMENSIONS FOR OPENINGS ARE ROUGH OPENING SIZES, UNLESS NOTED OTHERWISE. CONTRACTOR TO VERIFY SIZE AND LOCATIONS OF OPENINGS WITH PROCESS DRAWINGS, TYPICAL.
11. SEE NOTE 10 ON SHEET 13S103 FOR PVC LINER REQUIREMENTS.

TRUE NORTH

PROJECT NORTH

FILE: 215786-13S104.dwg
DATE: Jun 30, 2015-1:10:00pm, reinder

HDR Engineering, Inc.

ISSUE	DATE	DESCRIPTION
A	JUNE 2015	ISSUED FOR BID

PROJECT MANAGER	C. OLSON
DESIGNED	M. MOSTAFA
DESIGNED	
CHECKED	O. TAVANGAR
DRAWN	D. ELDREDGE
DATE	JUNE 30, 2015
PROJECT NUMBER	215786

REGISTERED PROFESSIONAL ENGINEER MOHAMADREZA MOSTAFA NO. 78649 EXP. 09/30/15 CIVIL STATE OF CALIFORNIA 06/30/15

CITY OF PINOLE CALIFORNIA 1903

PINOLE/HERCULES WATER POLLUTION CONTROL PLANT UPGRADE CLIENT PN

STRUCTURAL

GRIT REMOVAL INTERMEDIATE PLAN - AT ELEVATION 121.00'

0 1" 2"

FILENAME	215786-13S104
SCALE	AS NOTED

SHEET **13S104**

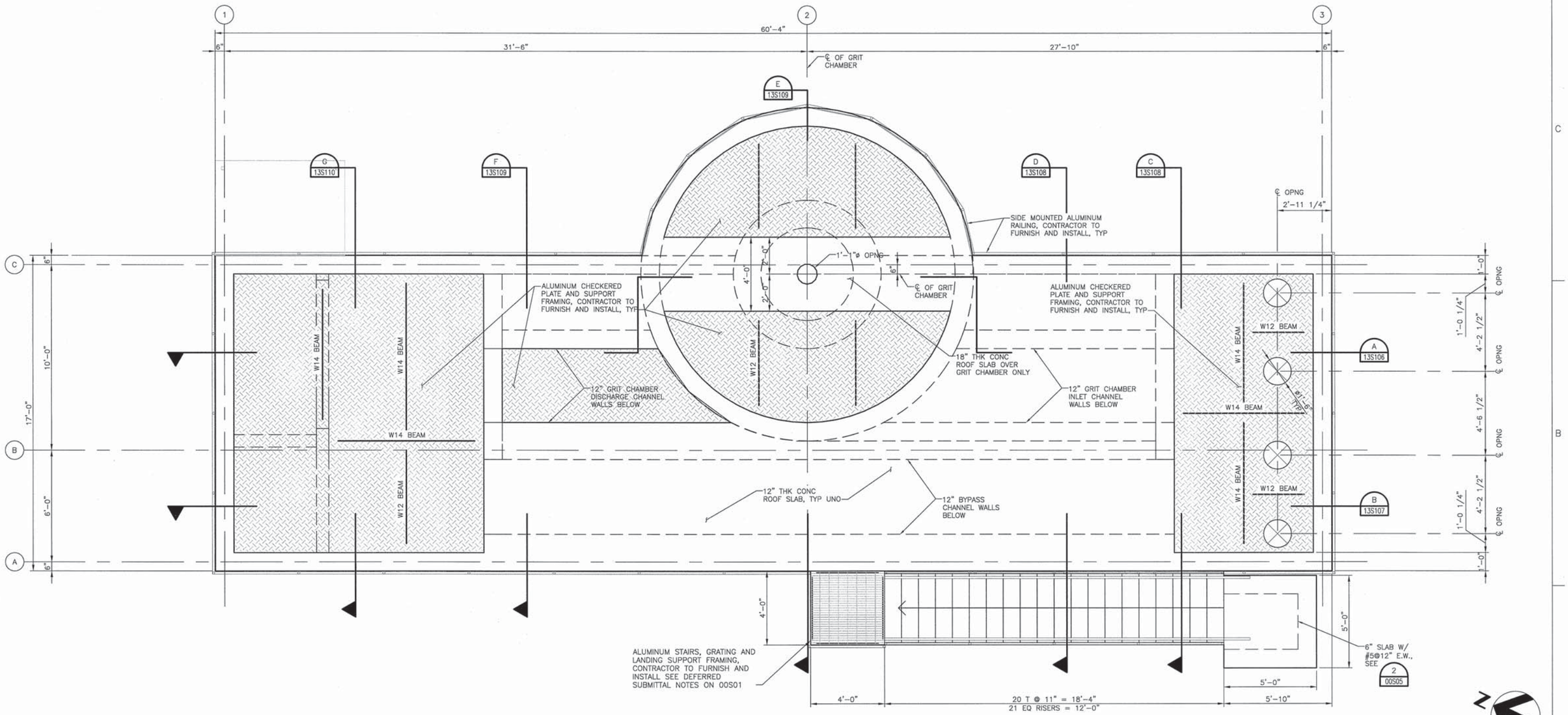

TOP PLAN

3/8" = 1'-0"

NOTES:

1. FOR GENERAL NOTES, SEE SHEET 00S01 AND 00S02.
2. FOR SPECIAL INSPECTION REQUIREMENTS, SEE 00S03 AND 00S04.
3. FOR TYPICAL CONCRETE DETAILS, SEE SHEETS 00S05 THRU 00S08.
4. FOR TYPICAL REINFORCING DETAILS, SEE 00S09.
5. FOR TYPICAL CONCRETE BEAM, SLAB, AND REINFORCEMENTS SEE SHEETS 13S107 THRU 13S110.
6. ALUMINUM CHECKERED PLATE AND SUPPORT BEAM SIZES, RAILINGS WILL BE DESIGNED PER THE CONTRACTOR'S DESIGN. SEE DEFERRED SUBMITTALS ON SHEET 00S01.
7. FOR TYPICAL CHECKERED PLATE DETAILS, SEE SHEETS 00S19 AND 00S20.
8. FOR TYPICAL RAILING DETAILS, SEE SHEETS 00S19 AND 00S20.
9. ALL COLUMNS, WALLS, PILES, AND PILECAPS ARE CENTERED ON GRID LINES, UNLESS NOTED OTHERWISE.
10. ALL DIMENSIONS FOR OPENINGS ARE ROUGH OPENING SIZES, UNLESS NOTED OTHERWISE. CONTRACTOR TO VERIFY SIZE AND LOCATIONS OF THE OPENINGS WITH PROCESS DRAWINGS, TYPICAL.
11. SEE NOTE 10 ON SHEET 13S103 FOR PVC LINER REQUIREMENTS.

TRUE NORTH

PROJECT NORTH

FILE: 215786-13S105.dwg
DATE: Jun 30, 2015-1:10:51pm, rsnider

HDR Engineering, Inc.

ISSUE	DATE	DESCRIPTION
A	JUNE 2015	ISSUED FOR BID

PROJECT MANAGER	C. OLSON
DESIGNED	M. MOSTAFA
DESIGNED	
CHECKED	O. TAVANGAR
DRAWN	D. ELDREDGE
DATE	JUNE 30, 2015
PROJECT NUMBER	215786

REGISTERED PROFESSIONAL ENGINEER MOHAMMADREZA MOSTAFA NO. 78649 EXP. 09/30/15 CIVIL STATE OF CALIFORNIA 06/30/15

CITY OF PINOLE CALIFORNIA 1903

PINOLE/HERCULES
WATER POLLUTION
CONTROL PLANT UPGRADE
CLIENT PN

STRUCTURAL

GRIT REMOVAL TOP PLAN

0 1" 2"

FILENAME	215786-13S105
SCALE	AS NOTED

SHEET **13S105**

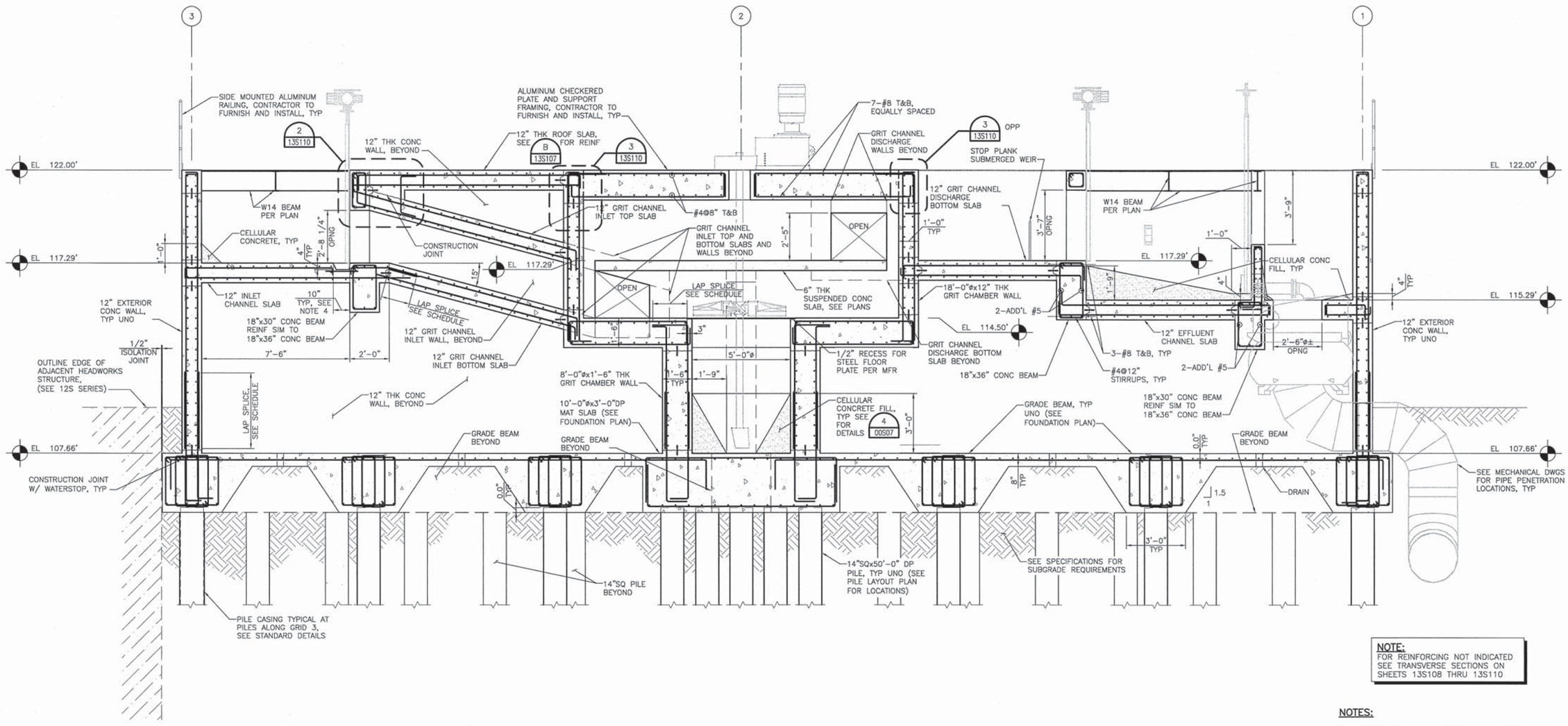

NOTE:
FOR REINFORCING NOT INDICATED SEE TRANSVERSE SECTIONS ON SHEETS 13S108 THRU 13S110

SECTION
3/8" = 1'-0"

A 13S101

NOTES:

1. FOR WALL MARKS AND WALL SCHEDULE SEE 13S102/103 AND 00S11 FOR ALL WALL REINFORCING NOT INDICATED IN THE SECTIONS.
2. FOR PIPE CONNECTIONS, EQUIPMENT AND DETAILS SEE MECHANICAL DRAWINGS.
3. FOR CELLULAR CONCRETE SEE SPECIFICATIONS. FOR DETAILS SEE SHEET 00S07.
4. CONTRACTOR TO VERIFY THE LOCATIONS AND DIMENSIONS OF THE GATE RECESS PER THE MANUFACTURERS DRAWINGS.

FILE: 215786-13S106.dwg
DATE: Jun 30, 2015- 11:17:21am, rsnider

HDR Engineering, Inc.

ISSUE	DATE	DESCRIPTION
A	JUNE 2015	ISSUED FOR BID

PROJECT MANAGER	C. OLSON
DESIGNED	M. MOSTAFA
DESIGNED	
CHECKED	O. TAVANGAR
DRAWN	D. ELDREDGE
DATE	JUNE 30, 2015
PROJECT NUMBER	215786

REGISTERED PROFESSIONAL ENGINEER MOHAMMADREZA MOSTAFA NO. 78649 EXP. 09/30/15 CIVIL STATE OF CALIFORNIA 6/30/15

CITY OF PINOLE CALIFORNIA 1903

PINOLE/HERCULES WATER POLLUTION CONTROL PLANT UPGRADE CLIENT PN

STRUCTURAL

GRIT REMOVAL SECTIONS - 1

0 1" 2"

FILENAME	215786-13S106
SCALE	AS NOTED

SHEET 13S106

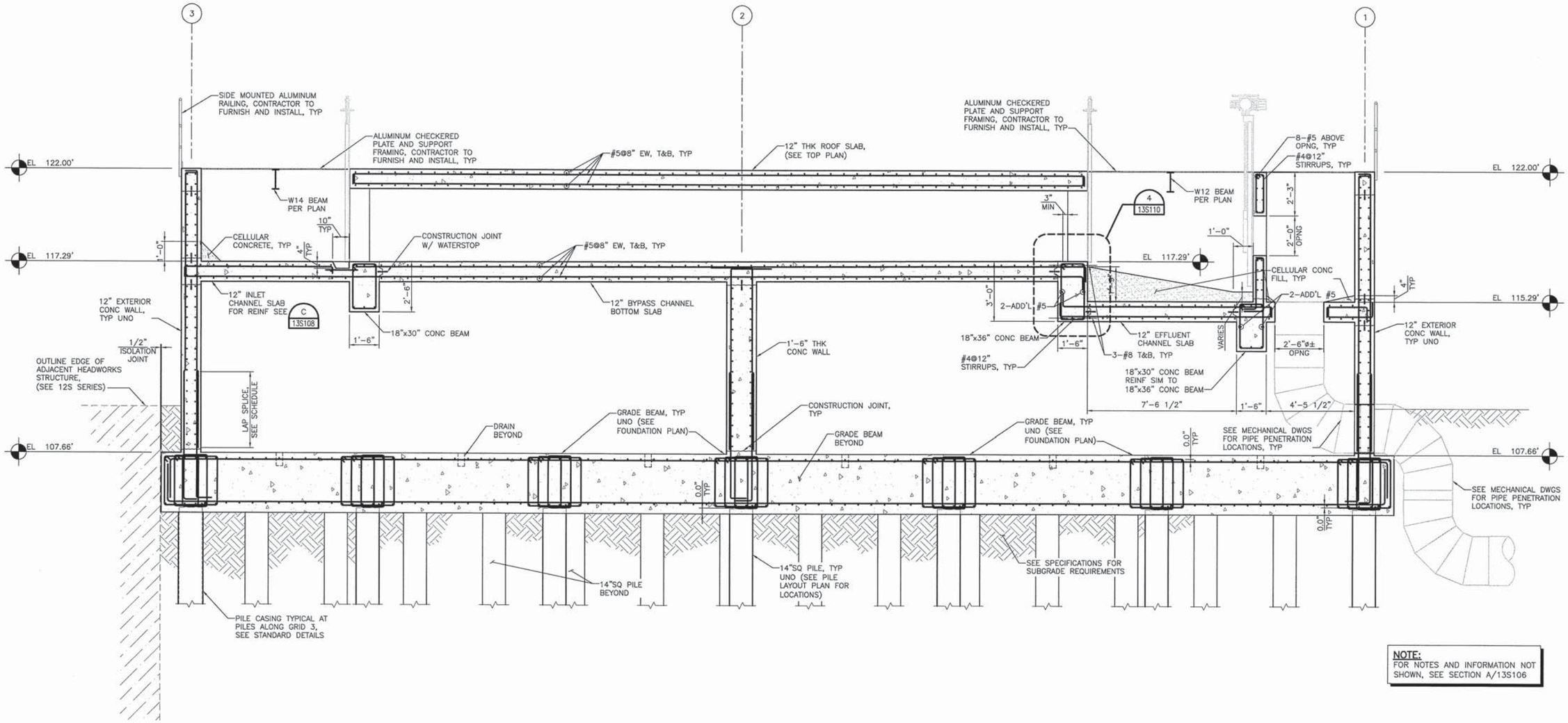

NOTE:
FOR NOTES AND INFORMATION NOT SHOWN, SEE SECTION A/13S106

SECTION
3/8" = 1'-0"

B 13S101

FILE: 215786-13S107.dwg
DATE: Jun 30, 2015 - 8:40:20am, jwebb

HDR Engineering, Inc.

ISSUE	DATE	DESCRIPTION
A	JUNE 2015	ISSUED FOR BID

PROJECT MANAGER	C. OLSON
DESIGNED	M. MOSTAFA
DESIGNED	
CHECKED	O. TAVANGAR
DRAWN	D. ELDREDGE
DATE	JUNE 30, 2015
PROJECT NUMBER	215786

REGISTERED PROFESSIONAL ENGINEER MOHAMMADREZA MOSTAFA NO. 78649 EXP. 09/30/15 CIVIL STATE OF CALIFORNIA
06/30/15

CITY OF PINOLE CALIFORNIA 1903

PINOLE/HERCULES
WATER POLLUTION
CONTROL PLANT UPGRADE
CLIENT PN

STRUCTURAL

GRIT REMOVAL SECTIONS - 2

0 1" 2"

FILENAME	215786-13S107
SCALE	AS NOTED

SHEET 13S107

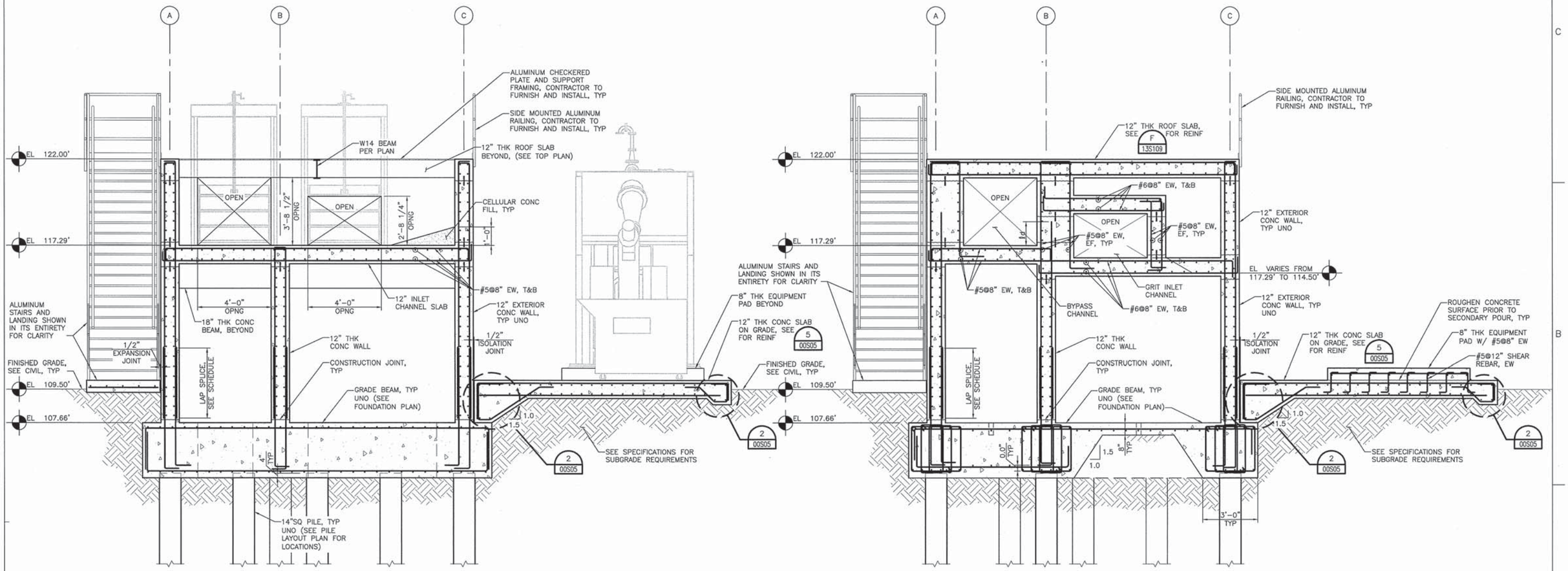

NOTE:
FOR NOTES AND INFORMATION NOT SHOWN, SEE SECTION A/13S106

SECTION
3/8" = 1'-0"
C 13S101

NOTE:
FOR NOTES AND INFORMATION NOT SHOWN, SEE SECTION A/13S106

SECTION
3/8" = 1'-0"
D 13S101

FILE: 215786-13S108.dwg
DATE: Jun 30, 2015-8:40:49am, jwebb

HDR
HDR Engineering, Inc.

ISSUE	DATE	DESCRIPTION
A	JUNE 2015	ISSUED FOR BID

PROJECT MANAGER	C. OLSON
DESIGNED	M. MOSTAFA
DESIGNED	
CHECKED	O. TAVANGAR
DRAWN	D. ELDREDGE
DATE	JUNE 30, 2015
PROJECT NUMBER	215786

REGISTERED PROFESSIONAL ENGINEER MOHAMMADREZA MOSTAFA NO. 78649 EXP. 09/30/15 CIVIL STATE OF CALIFORNIA 06/30/15

CITY OF PINOLE CALIFORNIA 1903

PINOLE/HERCULES
WATER POLLUTION
CONTROL PLANT UPGRADE
CLIENT PN

STRUCTURAL

GRIT REMOVAL SECTIONS - 3

0 1" 2"

FILENAME	215786-13S108
SCALE	AS NOTED

SHEET
13S108

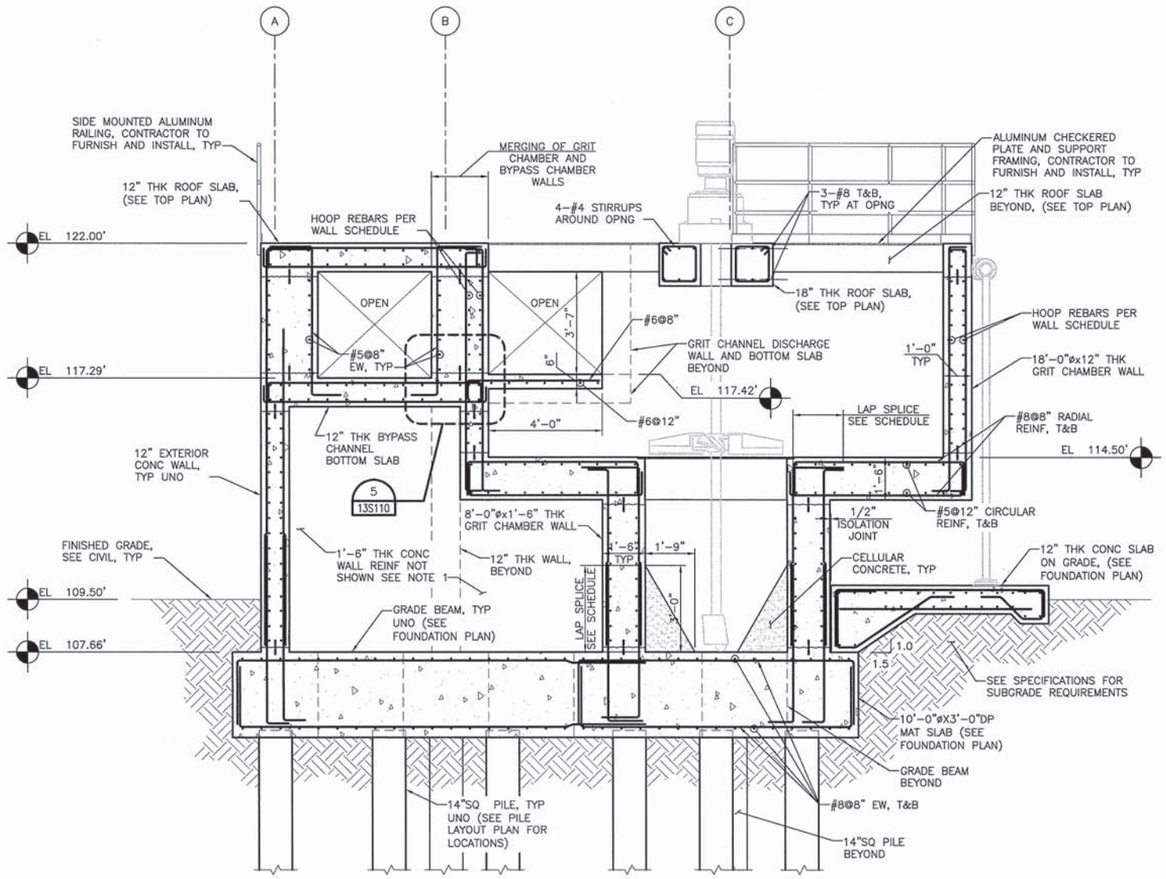

NOTES:
FOR NOTES AND INFORMATION NOT SHOWN, SEE SECTION A/13S106.

1. THE HORIZ & VERT REBAR TO BE DOWELED INTO THE PERP SLABS AND WALLS.

SECTION
3/8" = 1'-0"
E 13S101

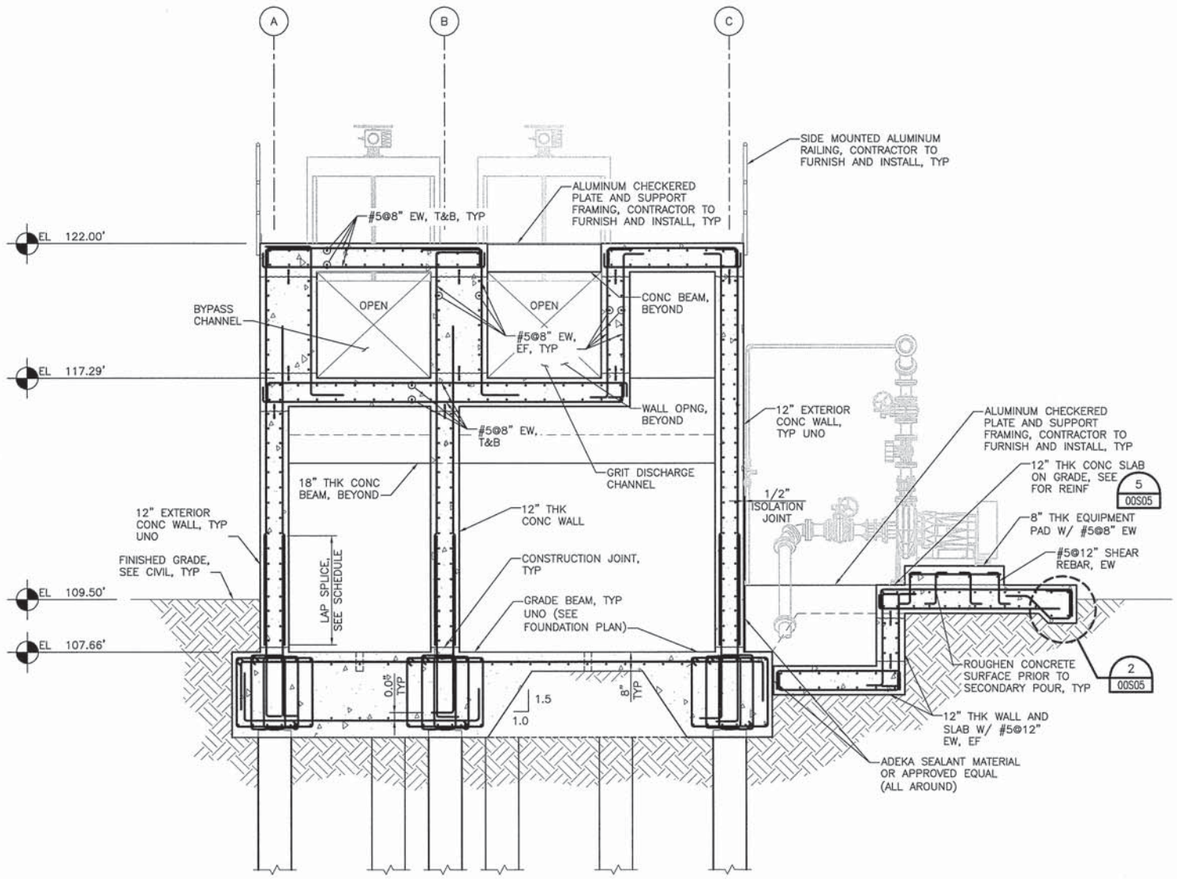

NOTE:
FOR NOTES AND INFORMATION NOT SHOWN, SEE SECTION A/13S106

SECTION
3/8" = 1'-0"
F 13S101

FILE: 215786-13S109.dwg
DATE: Jun 30, 2015-8:41:11am, jwebb

HDR
HDR Engineering, Inc.

ISSUE	DATE	DESCRIPTION
A	JUNE 2015	ISSUED FOR BID

PROJECT MANAGER	C. OLSON
DESIGNED	M. MOSTAFA
DESIGNED	
CHECKED	O. TAVANGAR
DRAWN	D. ELDREDGE
DATE	JUNE 30, 2015
PROJECT NUMBER	215786

REGISTERED PROFESSIONAL ENGINEER MOHAMMADREZA MOSTAFA NO. 78649 EXP. 09/30/15 CIVIL STATE OF CALIFORNIA
06/30/15

CITY OF PINOLE CALIFORNIA 1903

PINOLE/HERCULES
WATER POLLUTION
CONTROL PLANT UPGRADE
CLIENT PN

STRUCTURAL

GRIT REMOVAL SECTIONS - 4

0 1" 2"

FILENAME	215786-13S109
SCALE	AS NOTED

SHEET
13S109

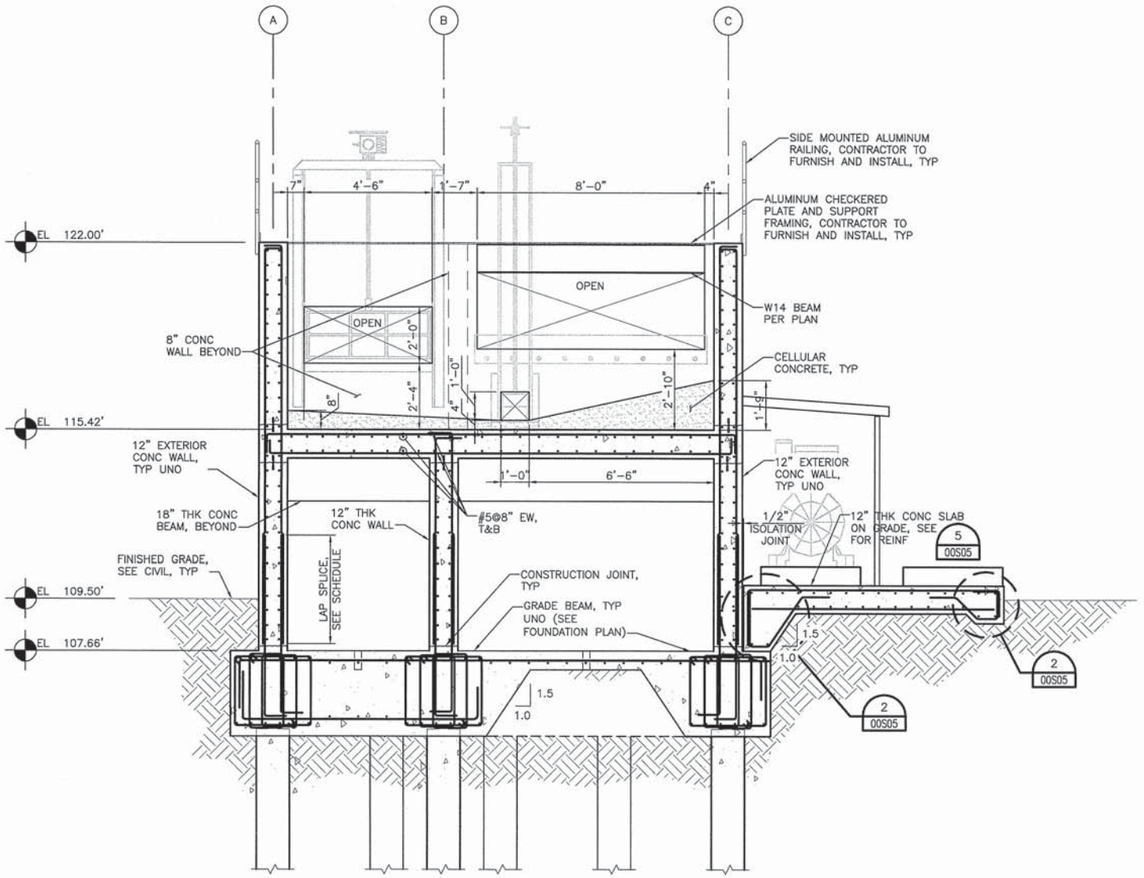

SECTION
3/8" = 1'-0"
G
13S101

NOTE:
FOR NOTES AND INFORMATION NOT SHOWN, SEE SECTION A/13S106

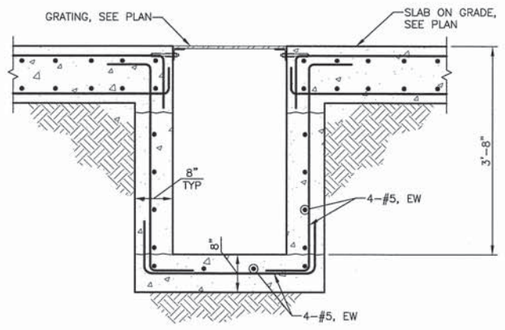

SUMP DETAIL
3/4"=1'-0"
1
13S102

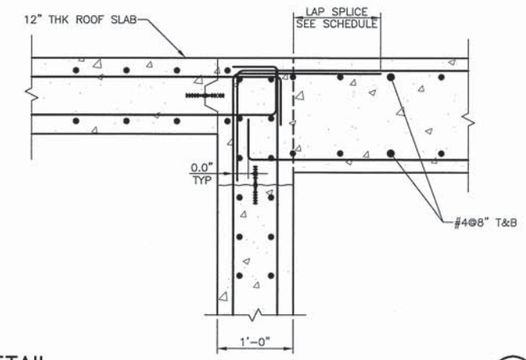

DETAIL
1"=1'-0"
3
13S106

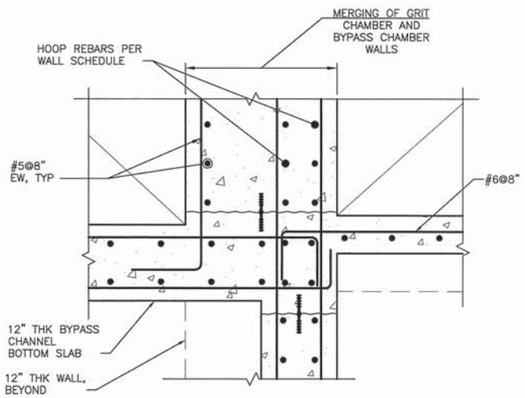

DETAIL
1"=1'-0"
5
13S109

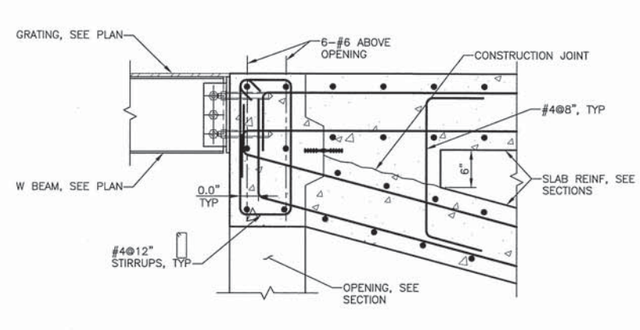

DETAIL
1"=1'-0"
2
13S106

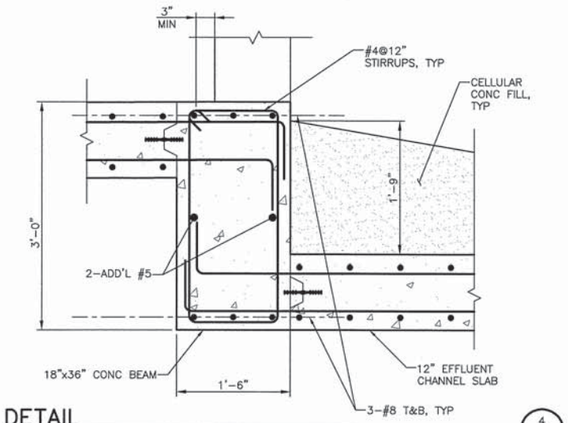

DETAIL
1"=1'-0"
4
13S107

ISSUE	DATE	DESCRIPTION
A	JUNE 2015	ISSUED FOR BID

PROJECT MANAGER	C. OLSON
DESIGNED	M. MOSTAFA
DESIGNED	
CHECKED	O. TAVANGAR
DRAWN	D. ELDREDGE
DATE	JUNE 30, 2015
PROJECT NUMBER	215786

REGISTERED PROFESSIONAL ENGINEER MOHAMMADREZA MOSTAFA NO. 78649 EXP. 09/30/15 CIVIL STATE OF CALIFORNIA 06/30/15

CITY OF PINOLE CALIFORNIA 1903

PINOLE/HERCULES
WATER POLLUTION
CONTROL PLANT UPGRADE
CLIENT PN

STRUCTURAL

GRIT REMOVAL SECTIONS - 5

0 1" 2"

FILENAME	215786-13S110
SCALE	AS NOTED

SHEET
13S110

HDR Engineering, Inc.

FILE: 215786-13S110.dwg
DATE: Jun 30, 2015-8:41:31am, jwebb

NOTES:

1. FOR GENERAL NOTES, SEE SHEET 00S01 AND 00S02.
2. FOR SPECIAL INSPECTION REQUIREMENTS, SEE 00S03 AND 00S04.
3. FOR TYPICAL CONCRETE DETAILS, SEE SHEETS 00S05 THRU 00S08.
4. FOR TYPICAL REINFORCING DETAILS, SEE 00S09.
5. FOR TYPICAL PILE DETAILS AND SCHEDULE, SEE SHEET 00S10.
6. "14P–X" DENOTES 14" SQUARE PRESTRESSED PRECAST CONCRETE PILES. SEE SHEET 00S10 FOR DETAILS AND SCHEDULE.
7. ALL COLUMNS, WALLS, PILES, AND PILECAPS ARE CENTERED ON GRID LINES, UNLESS NOTED OTHERWISE.

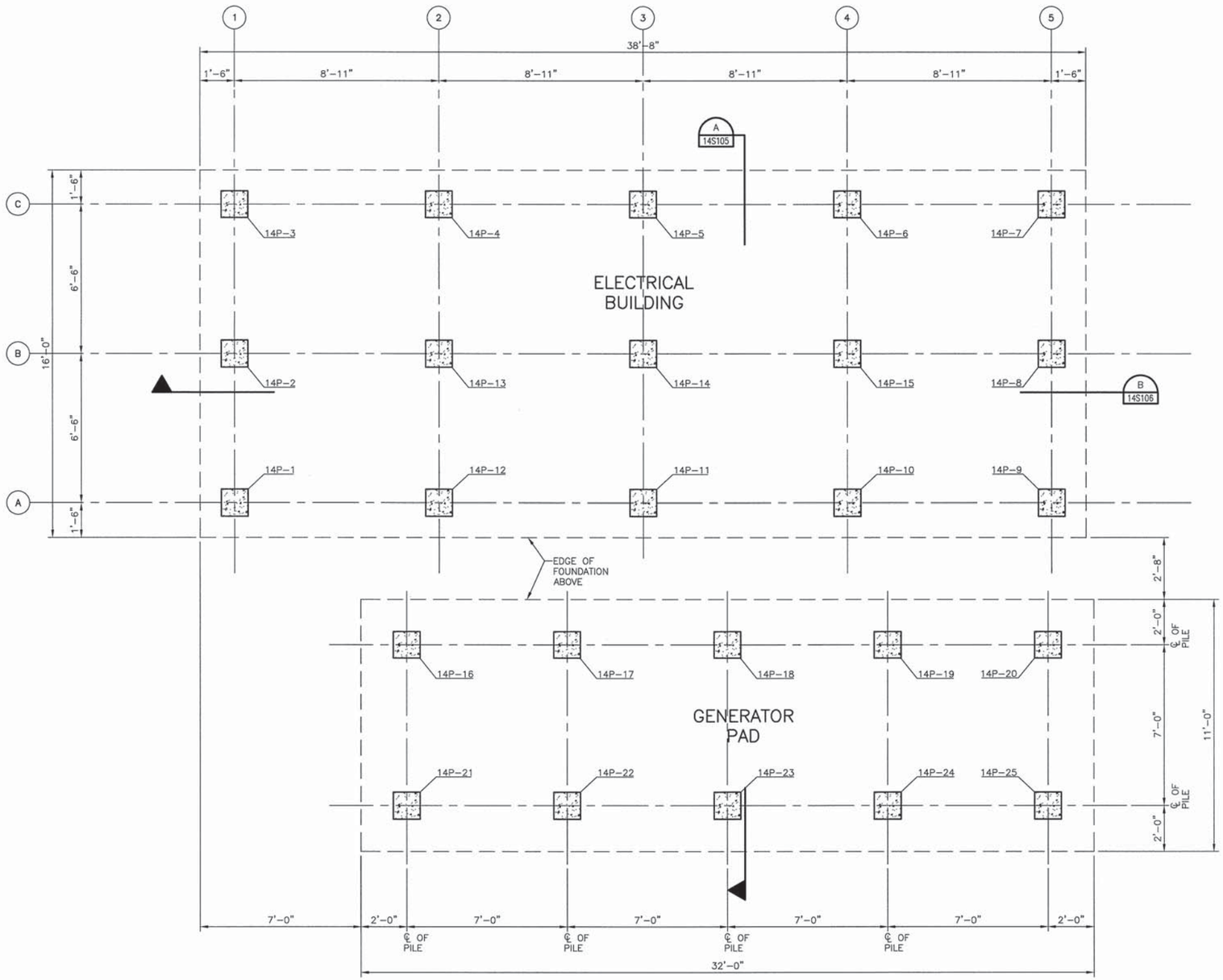

PILE LAYOUT PLAN

SCALE: 3/8" = 1'–0"



FILE: 215786–14S101.dwg
DATE: Jun 30, 2015–8:41:35am, jwebb

HDR
HDR Engineering, Inc.

ISSUE	DATE	DESCRIPTION
A	JUNE 2015	ISSUED FOR BID

PROJECT MANAGER	C. OLSON
DESIGNED	M. MOSTAFA
DESIGNED	
CHECKED	O. TAVANGAR
DRAWN	D. ELDREDGE
DATE	JUNE 30, 2015
PROJECT NUMBER	215786

REGISTERED PROFESSIONAL ENGINEER MOHAMMADREZA MOSTAFA NO. 78649 EXP. 09/30/15 CIVIL STATE OF CALIFORNIA
06/30/15

CITY OF PINOLE CALIFORNIA 1903

PINOLE/HERCULES
WATER POLLUTION
CONTROL PLANT UPGRADE
CLIENT PN

STRUCTURAL

ELECTRICAL BUILDING AND GENERATOR PILE LAYOUT PLAN

0 1" 2"

FILENAME	215786–14S101
SCALE	AS NOTED

SHEET
14S101

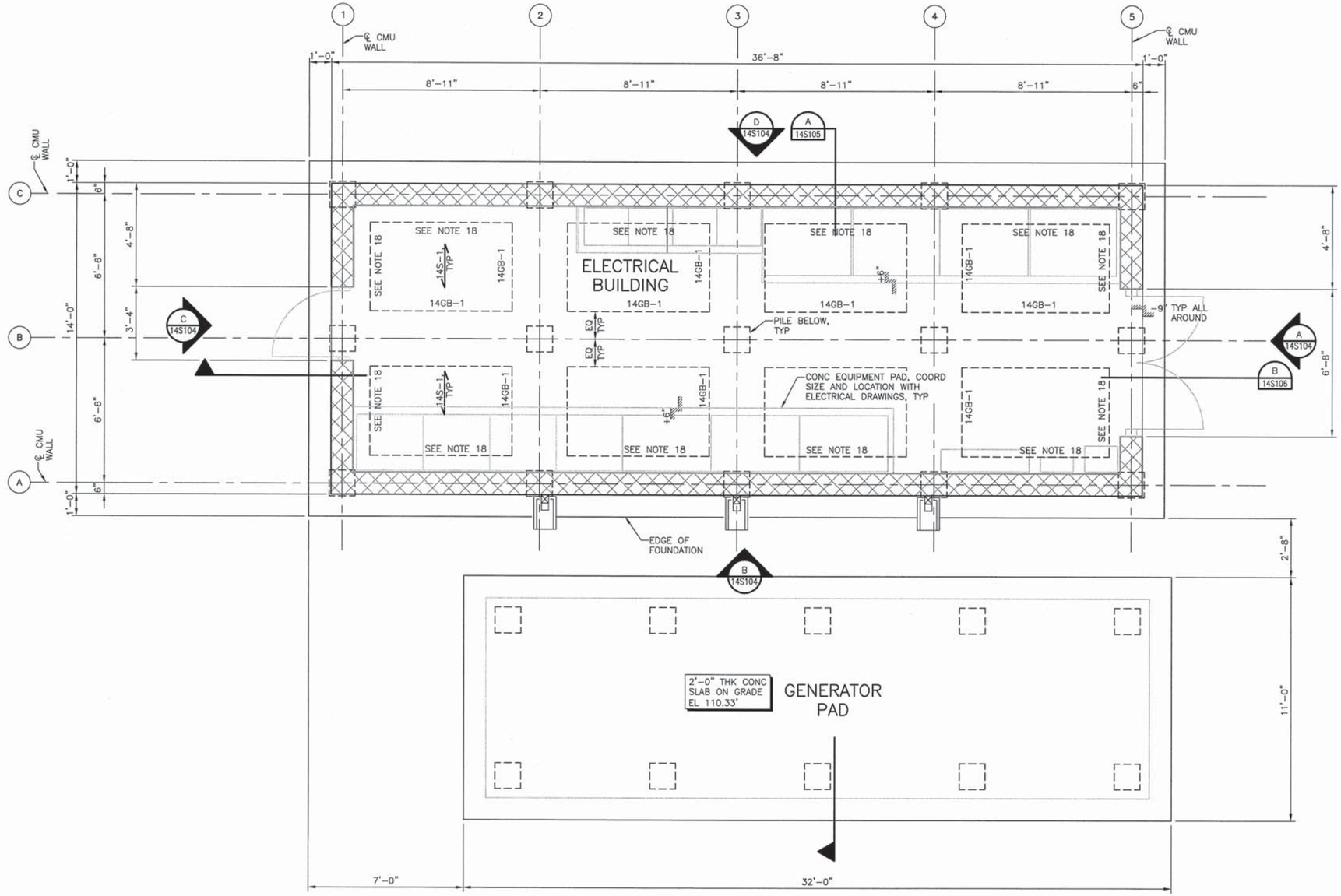

FOUNDATION PLAN

SCALE: 3/8" = 1'-0"

NOTES:

1. FOR GENERAL NOTES, SEE SHEET 00S01 AND 00S02.
2. FOR SPECIAL INSPECTION REQUIREMENTS, SEE 00S03 AND 00S04.
3. FOR TYPICAL CONCRETE DETAILS, SEE SHEETS 00S05 THRU 00S08.
4. FOR TYPICAL REINFORCING DETAILS, SEE 00S09.
5. FOR TYPICAL CONCRETE BEAM, SLAB, AND WALL DETAILS AND SCHEDULES, SEE SHEETS 00S11 AND 00S12.
6. FOR TYPICAL METAL DECK DETAILS, SEE SHEET 00S17.
7. FOR TYPICAL CMU WALL DETASILS, SEE SHEET 00S13.
8. FOR TYPICAL STEEL DETAILS, SEE SHEET 00S14, 00S015 AND 00S16.
9. "14P-X" DENOTES 14" SQUARE PRESTRESSED PRECAST CONCRETE PILES. SEE SHEET 00S10 FOR DETAILS AND SCHEDULE.
10. "14S-X" DENOTES CONCRETE SLAB. SEE SHEET 00S05 AND 00S12 FOR DETAILS AND SCHEDULE.
11. "14GB-X" DENOTES CONCRETE GRADE BEAM. SEE SHEET 00S11 FOR DETAILS AND SCHEDULE.
12. "14W-X" DENOTES CONCRETE WALL. SEE SHEET 00S11 FOR WALL REINFORCING SCHEDULE.
13. DENOTES BRICK VENEER.
14. DENOTES CMU WALL.
15. DENOTES CHANGE IN TOP OF CONCRETE ELEVATION.
16. "CMJ" DENOTES CONCRETE MASONRY JOINT. ALL CMJs ARE SPECIFICALLY CALLED OUT ON DRAWINGS. DO NOT ADD OR ELIMINATE ANY WITHOUT WRITTEN APPROVAL OF THE ENGINEER OF RECORD.
17. ALL COLUMNS, WALLS, PILES, AND PILECAPS ARE CENTERED ON GRID LINES, UNLESS NOTED OTHERWISE.
18. THE REINFORCEMENT IS SHOWN ON 6/14S107.

TRUE NORTH

PROJECT NORTH

FILE: 215786-14S102.dwg
DATE: Jun 30, 2015-8:41:39am, jwebb

HDR Engineering, Inc.

ISSUE	DATE	DESCRIPTION
A	JUNE 2015	ISSUED FOR BID

PROJECT MANAGER	C. OLSON
DESIGNED	M. MOSTAFA
DESIGNED	
CHECKED	O. TAVANGAR
DRAWN	M. MOSTAFA
DATE	JUNE 30, 2015
PROJECT NUMBER	215786

REGISTERED PROFESSIONAL ENGINEER MOHAMMADREZA MOSTAFA NO. 78649 EXP. 09/30/15 CIVIL STATE OF CALIFORNIA 06/30/15

CITY OF PINOLE CALIFORNIA 1903

PINOLE/HERCULES
WATER POLLUTION
CONTROL PLANT UPGRADE
CLIENT PN

STRUCTURAL

ELECTRICAL BUILDING AND GENERATOR FOUNDATION PLAN

0 1" 2"

FILENAME	215786-14S102
SCALE	AS NOTED

SHEET **14S102**

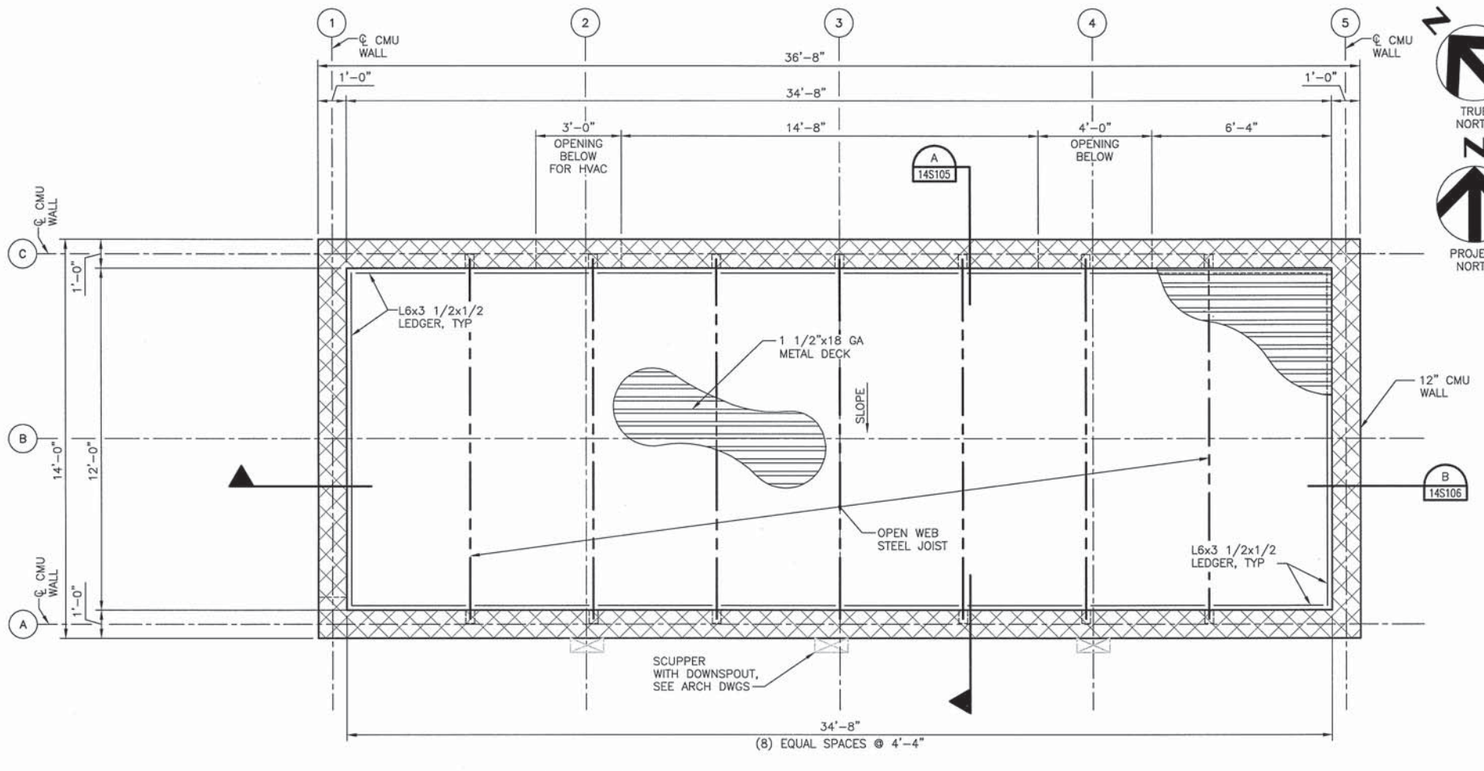

ROOF FRAMING PLAN

SCALE: 3/8" = 1'-0"

NOTES:

1. FOR GENERAL NOTES, SEE SHEET 00S01 AND 00S02.
2. FOR SPECIAL INSPECTION REQUIREMENTS, SEE 00S03 AND 00S04.
3. FOR TYPICAL METAL DECK DETAILS, SEE SHEET 00S17.
4. FOR TYPICAL CMU WALL DETAILS, SEE SHEET 00S13.
5. FOR TYPICAL STEEL DETAILS, SEE SHEET 00S14, 00S015 AND 00S16.
6. DENOTES CMU WALL.
7. "CMJ" DENOTES CONCRETE MASONRY JOINT. ALL CMJs ARE SPECIFICALLY CALLED OUT ON DRAWINGS. DO NOT ADD OR ELIMINATE ANY WITHOUT WRITTEN APPROVAL OF THE ENGINEER OF RECORD.
8. ALL COLUMNS, WALLS, PILES, AND PILECAPS ARE CENTERED ON GRID LINES, UNLESS NOTED OTHERWISE.
9. ALL LOADS SHOWN ARE SERVICE LOADS.
10. REFERENCE THE DESIGN LOADS OUTLINED ON SHEET 00S01 AND SPECIFICATION 05211 FOR ADDITIONAL DESIGN LOAD REQUIREMENTS.
11. TRUSSES SHALL BE DESIGNED TO TRANSFER THE LATERAL LOADS SHOWN TO THE CMU SHEAR WALLS INDICATED.
12. DESIGN ROOF TRUSSES WITH NO CAMBER.
13. LATERAL LOADS SHOWN APPLY IN BOTH DIRECTIONS, NON-SIMULTANIOUSLY.
14. TRUSS MFR TO PROVIDE LATERAL BRACING FOR COMPRESSIVE SEISMIC LOADS AS REQUIRED.
15. TRUSS DESIGN LOADS ARE ON THIS SHEET. ALSO SEE DEFERRED APPROVAL NOTE ON 0S001.

OPEN WEB JOIST DESIGN LOADS

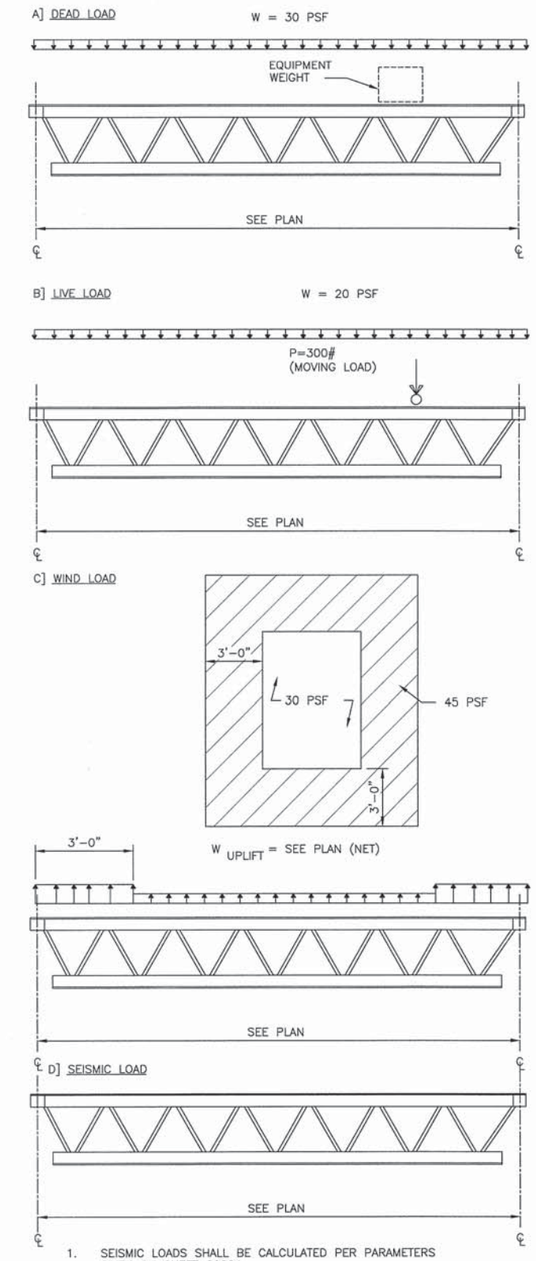

$P_{T/C}$ = 5,360#

1. SEISMIC LOADS SHALL BE CALCULATED PER PARAMETERS GIVEN ON SHEET 00S01.
2. IN ADDITION (TO LOADS GIVEN IN NOTE 1), TRUSS MEMBERS SHALL BE DESIGNED TO ADDITIONAL AXIAL LOAD AS SHOWN:

FILE: 215786-14S103.dwg
DATE: Jun 30, 2015-8:41:42am, jwebb

HDR Engineering, Inc.

ISSUE	DATE	DESCRIPTION
A	JUNE 2015	ISSUED FOR BID

PROJECT MANAGER	C. OLSON
DESIGNED	M. MOSTAFA
DESIGNED	
CHECKED	O. TAVANGAR
DRAWN	D. ELDREDGE
DATE	JUNE 30, 2015
PROJECT NUMBER	215786

REGISTERED PROFESSIONAL ENGINEER MOHAMMADREZA MOSTAFA NO. 78649 EXP. 09/30/15 CIVIL STATE OF CALIFORNIA 06/30/15

CITY OF PINOLE CALIFORNIA 1903

PINOLE/HERCULES
WATER POLLUTION
CONTROL PLANT UPGRADE
CLIENT PN

STRUCTURAL

ELECTRICAL BUILDING ROOF FRAMING PLAN

0 1" 2"

FILENAME	215786-14S103
SCALE	AS NOTED

SHEET 14S103

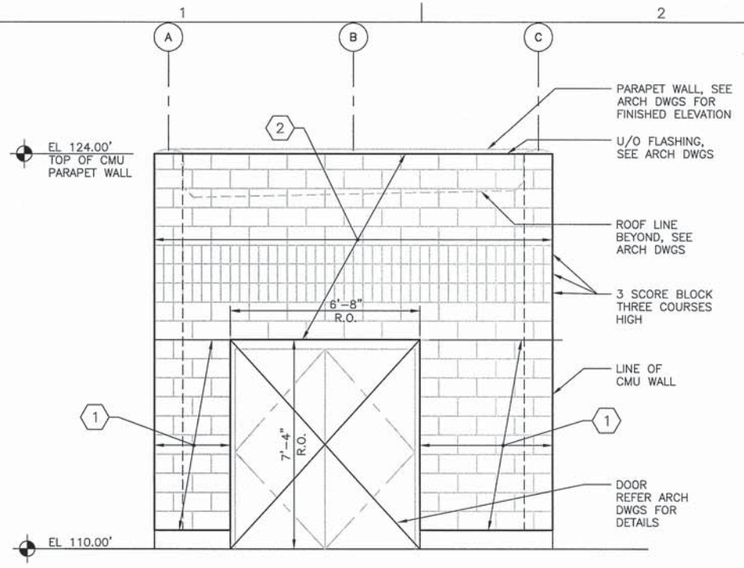

EAST ELEVATION

SCALE: 3/8" = 1'-0"

A / 14S102

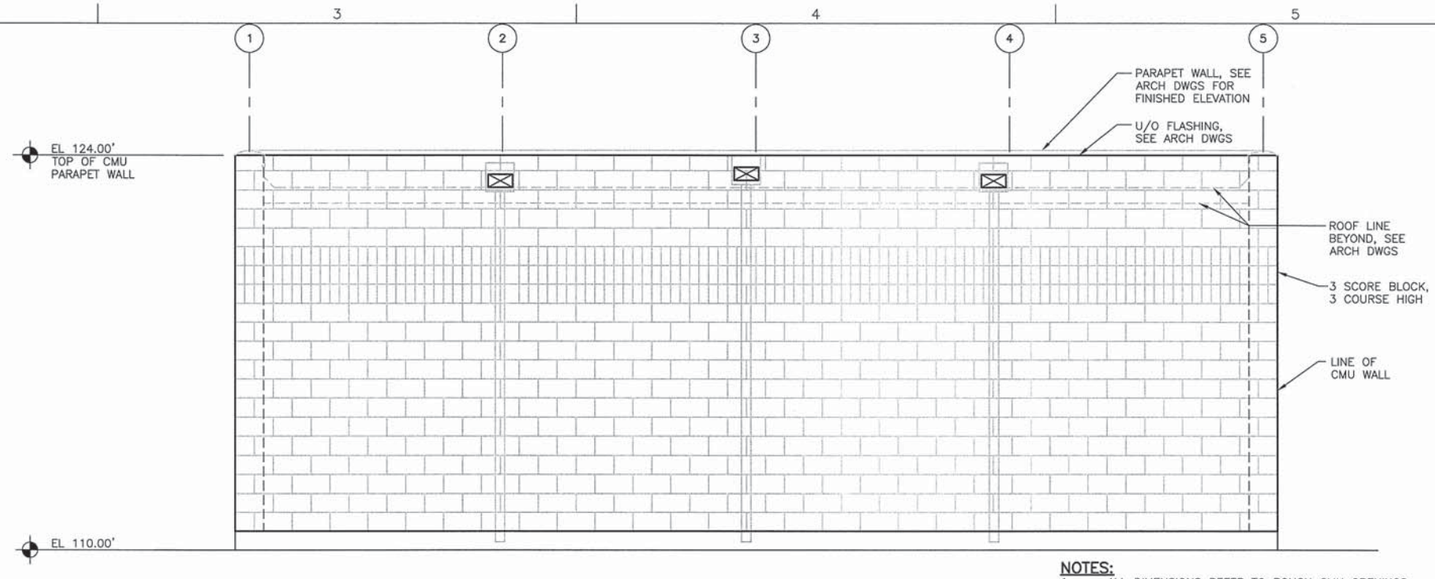

SOUTH ELEVATION

SCALE: 3/8" = 1'-0"

B / 14S102

NOTES:

1. ALL DIMENSIONS REFER TO ROUGH CMU OPENINGS.
2. (1) REDUCE VERTICAL AND HORIZONTAL REINFORCEMENT SPACING TO 8"OC.
3. (2) HORIZONTAL REINFORCEMENT SPACING TO 16"OC.
4. REFER TO PLANS FOR NOTES NOT INDICATED ON THIS SHEET.
5. R.O. IS DENOTED AS "ROUGH OPENING".

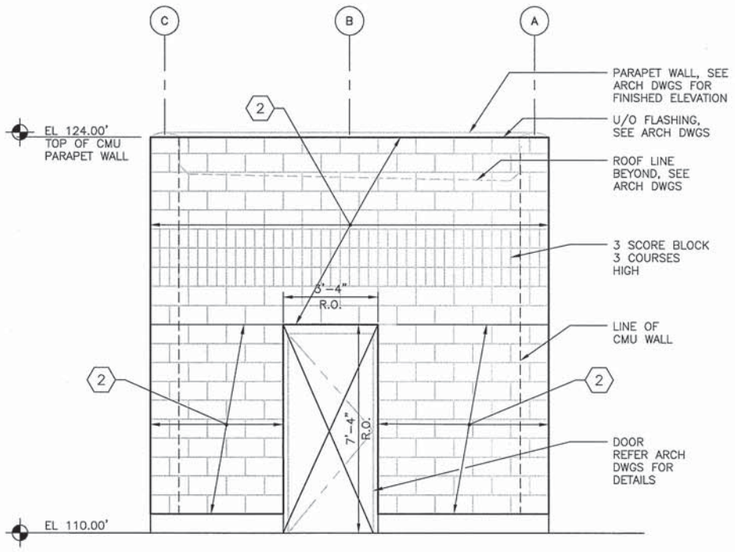

WEST ELEVATION

SCALE: 3/8" = 1'-0"

C / 14S102

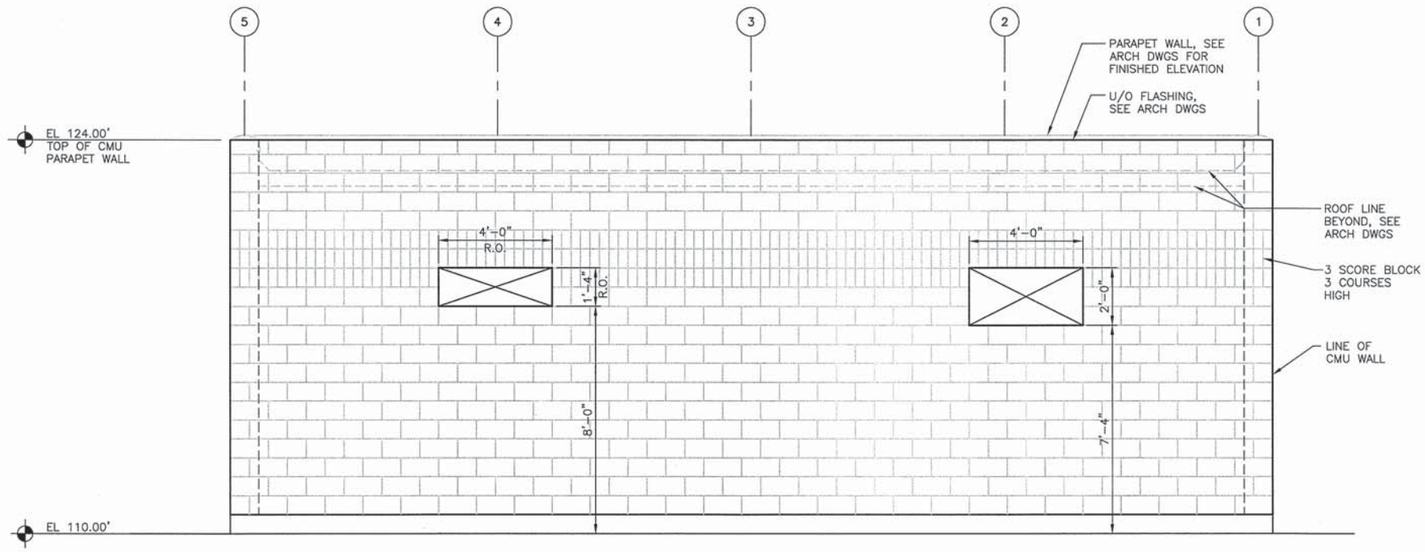

NORTH ELEVATION

SCALE: 3/8" = 1'-0"

D / 14S102

FILE: 215786-14S104.dwg
DATE: Jun 30, 2015-8:41:46am, jwebb

HDR Engineering, Inc.

ISSUE	DATE	DESCRIPTION
A	JUNE 2015	ISSUED FOR BID

PROJECT MANAGER	C. OLSON
DESIGNED	M. MOSTAFA
DESIGNED	
CHECKED	O. TAVANGAR
DRAWN	D. ELDREDGE
DATE	JUNE 30, 2015
PROJECT NUMBER	215786

REGISTERED PROFESSIONAL ENGINEER
MOHAMMADREZA MOSTAFA
NO. 78649
EXP. 09/30/15
CIVIL
STATE OF CALIFORNIA
06/30/15

CITY OF PINOLE CALIFORNIA 1903

PINOLE/HERCULES
WATER POLLUTION
CONTROL PLANT UPGRADE
CLIENT PN

STRUCTURAL

ELECTRICAL BUILDING STRUCTURAL ELEVATIONS

0 1" 2"

FILENAME	215786-14S104
SCALE	AS NOTED

SHEET **14S104**

NOTES:

1. REFER TO PLANS FOR NOTES NOT INDICATED ON THIS SHEET.
2. PRIOR TO CONDUIT STUB UPS INSTALLATION. REVIEW GENERATOR SUBMITTAL FOR ACTUAL LOCATIONS OF ALL ELECTRICAL CONNECTIONS.

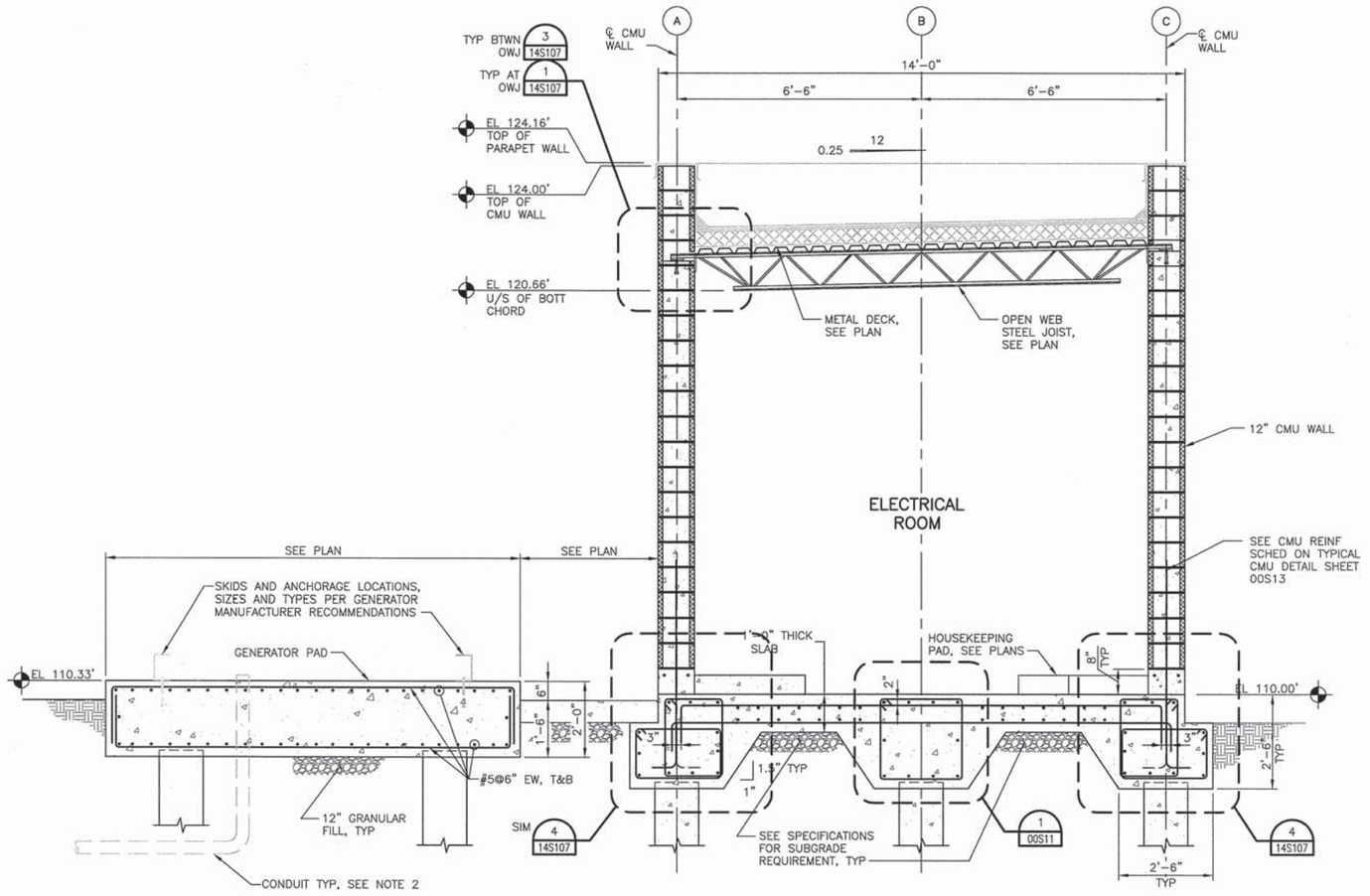

SECTION

SCALE: 1/2" = 1'-0"

A 14S102

FILE: 215786-14S105.dwg
DATE: Jun 30, 2015-8:41:50am, jwebb

HDR Engineering, Inc.

ISSUE	DATE	DESCRIPTION
A	JUNE 2015	ISSUED FOR BID

PROJECT MANAGER	C. OLSON
DESIGNED	M. MOSTAFA
DESIGNED	
CHECKED	O. TAVANGAR
DRAWN	D. ELDREDGE
DATE	JUNE 30, 2015
PROJECT NUMBER	215786

REGISTERED PROFESSIONAL ENGINEER MOHAMMADREZA MOSTAFA NO. 78649 EXP. 09/30/15 CIVIL STATE OF CALIFORNIA 06/30/15

CITY OF PINOLE CALIFORNIA 1903

PINOLE/HERCULES
WATER POLLUTION
CONTROL PLANT UPGRADE
CLIENT PN

STRUCTURAL

ELECTRICAL BUILDING AND GENERATOR - SECTIONS I

0 1" 2"

FILENAME	215786-14S105
SCALE	AS NOTED

SHEET **14S105**

NOTES:
1. REFER TO PLANS FOR NOTES NOT INDICATED ON THIS SHEET.

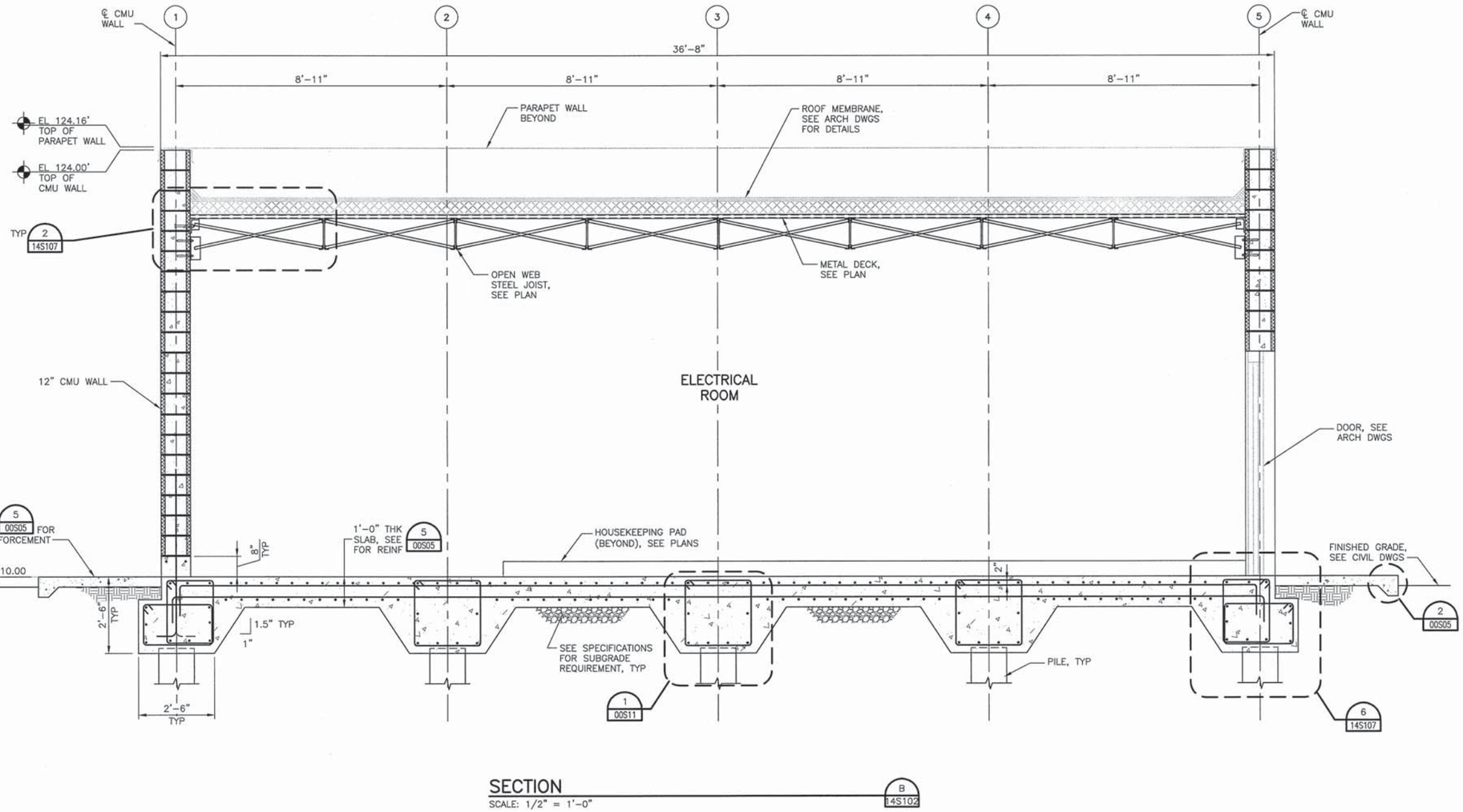

SECTION
SCALE: 1/2" = 1'-0"

B 14S102

FILE: 215786-14S106.dwg
DATE: Jun 30, 2015-8:41:54am, jwebb

HDR
HDR Engineering, Inc.

ISSUE	DATE	DESCRIPTION
A	JUNE 2015	ISSUED FOR BID

PROJECT MANAGER	C. OLSON
DESIGNED	M. MOSTAFA
DESIGNED	
CHECKED	O. TAVANGAR
DRAWN	D. ELDREDGE
DATE	JUNE 30, 2015
PROJECT NUMBER	215786

REGISTERED PROFESSIONAL ENGINEER MOHAMMADREZA MOSTAFA NO. 78649 EXP. 09/30/15 CIVIL STATE OF CALIFORNIA 06/30/15

CITY OF PINOLE CALIFORNIA 1903

PINOLE/HERCULES
WATER POLLUTION
CONTROL PLANT UPGRADE
CLIENT PN

STRUCTURAL

ELECTRICAL BUILDING AND GENERATOR - SECTIONS II

0 1" 2"

FILENAME	215786-14S106
SCALE	AS NOTED

SHEET
14S106

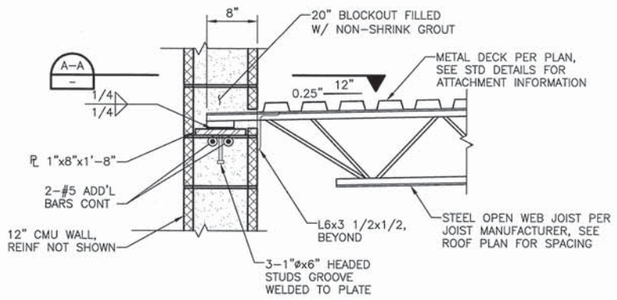

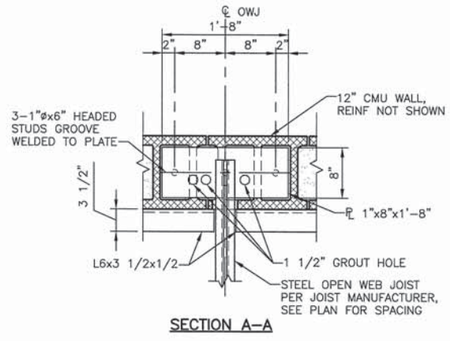

SECTION A–A

OPEN WEB JOIST TO 12" CMU WALL CONNECTION

SCALE: 1"=1'–0"

1 / 14S105

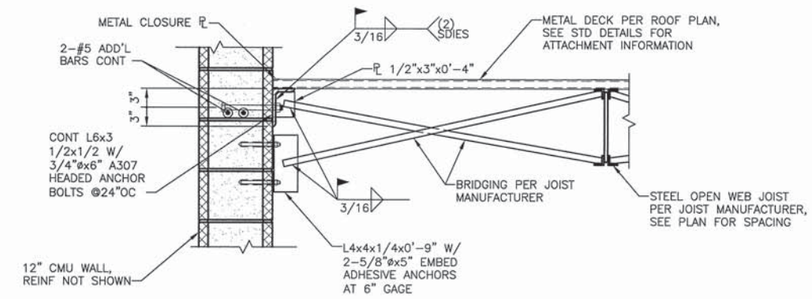

OPEN WEB JOIST TO 12" CMU WALL CONNECTION

SCALE: 1"=1'–0"

2 / 14S106

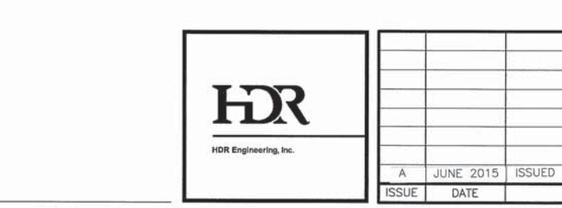

METAL DECK TO WALL CONN (BTWN OWJ)

SCALE: 1"=1'–0"

3 / 14S105

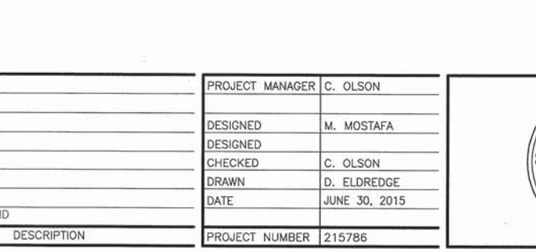

DETAIL GRADE BEAM

SCALE: 1"=1'–0"

4 / 14S105

FILE: 215786–14S107.dwg
DATE: Jun 30, 2015–8:41:59am, jwebb

HDR Engineering, Inc.

ISSUE	DATE	DESCRIPTION
A	JUNE 2015	ISSUED FOR BID

PROJECT MANAGER	C. OLSON
DESIGNED	M. MOSTAFA
DESIGNED	
CHECKED	C. OLSON
DRAWN	D. ELDREDGE
DATE	JUNE 30, 2015
PROJECT NUMBER	215786

REGISTERED PROFESSIONAL ENGINEER MOHAMMADREZA MOSTAFA NO. 78649 EXP. 09/30/15 CIVIL STATE OF CALIFORNIA 06/30/15

CITY OF PINOLE CALIFORNIA 1903

PINOLE/HERCULES
WATER POLLUTION
CONTROL PLANT UPGRADE
CLIENT PN

STRUCTURAL

ELECTRICAL BUILDING DETAILS

0 1" 2"

FILENAME	215786–14S107
SCALE	AS NOTED

SHEET **14S107**

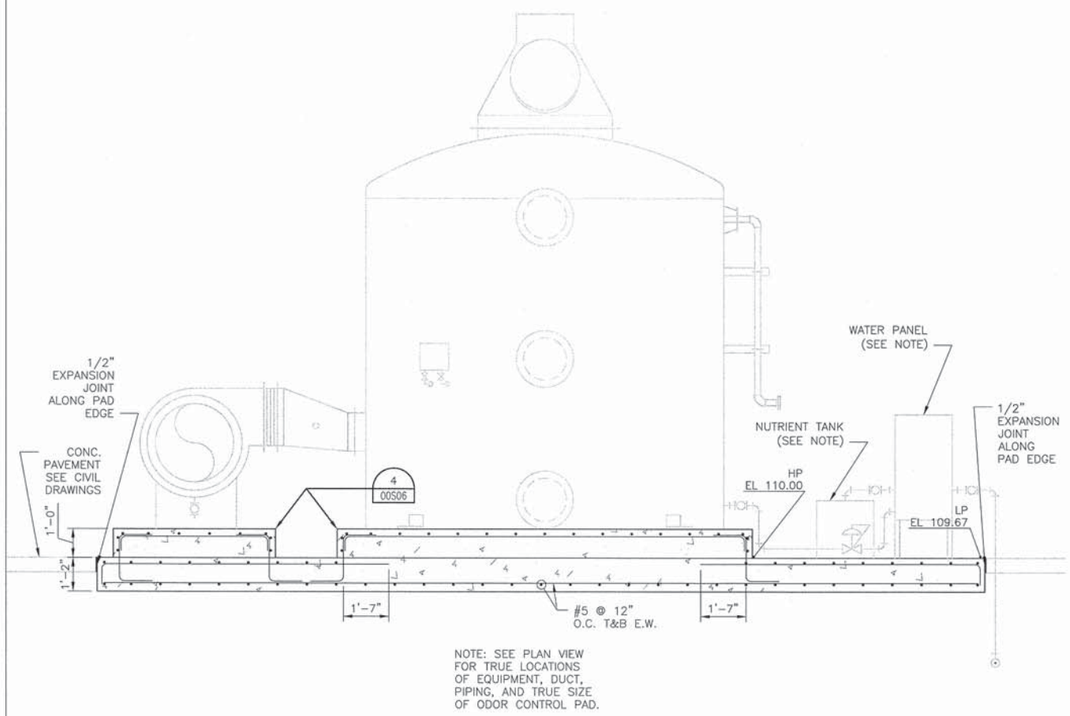

SECTION
3/8" = 1'-0"

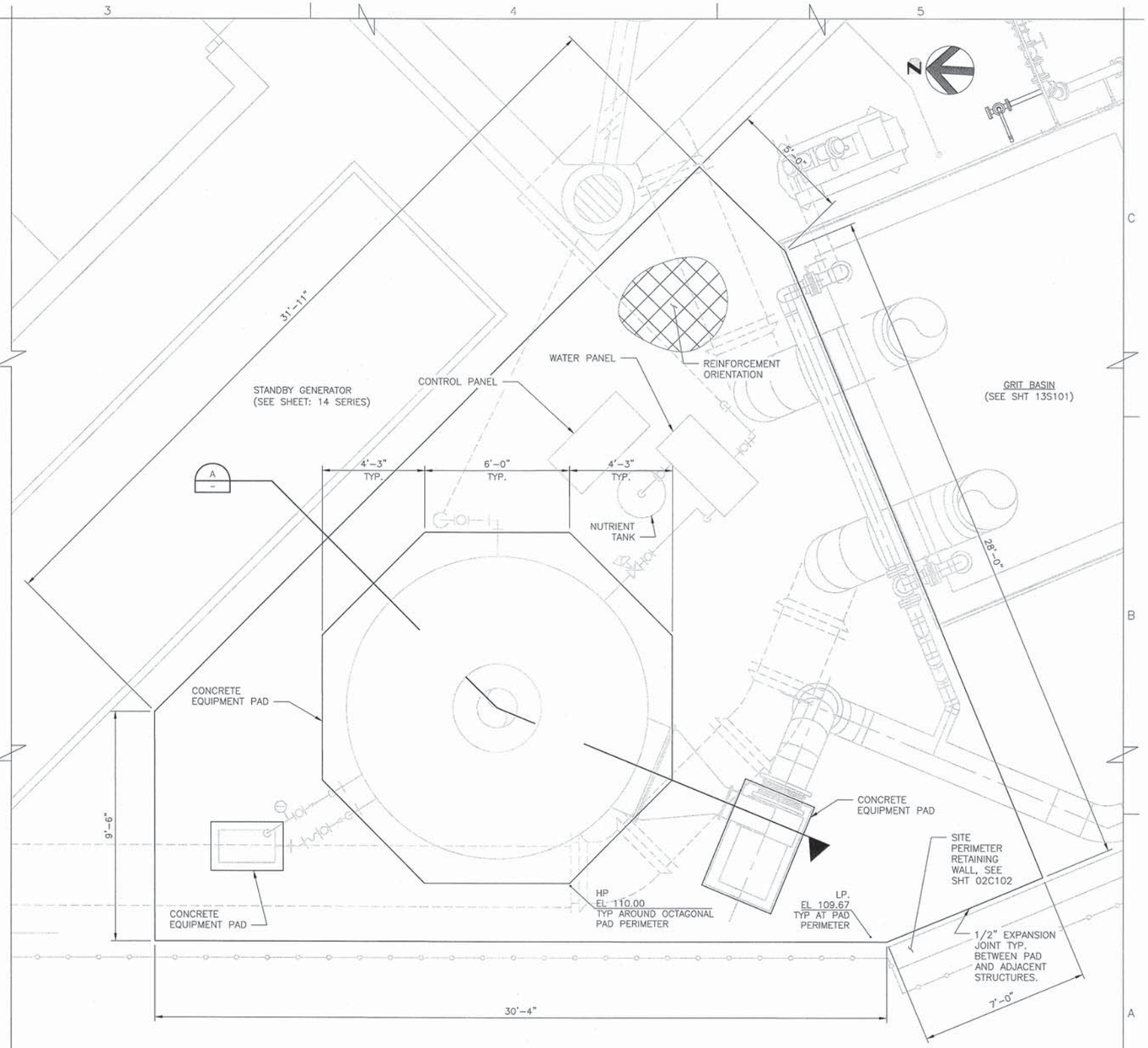

ODOR CONTROL PAD PLAN
3/8" = 1'-0"

FILE: 15S101.dwg
DATE: Jun 29, 2015-4:59:28pm, stori

HDR
HDR Engineering, Inc.

ISSUE	DATE	DESCRIPTION
A	JUNE 2015	ISSUED FOR BID

PROJECT MANAGER	C. OLSON
DESIGNED	Z.LI
DESIGNED	
CHECKED	C. OLSON
DRAWN	S.LARI
DATE	JUNE 30, 2015
PROJECT NUMBER	215786

REGISTERED PROFESSIONAL ENGINEER
ZHEN LI
NO. 74809
EXP. 12/31/15
6/30/2015
CIVIL
STATE OF CALIFORNIA

CITY OF PINOLE CALIFORNIA 1903

PINOLE/HERCULES
WATER POLLUTION
CONTROL PLANT UPGRADE
CLIENT PN

STRUCTURAL
HEADWORKS
ODOR CONTROL PAD
PLAN AND SECTION

0 1" 2"

FILENAME	15S101
SCALE	1/4"=1'-0"

SHEET
15S101

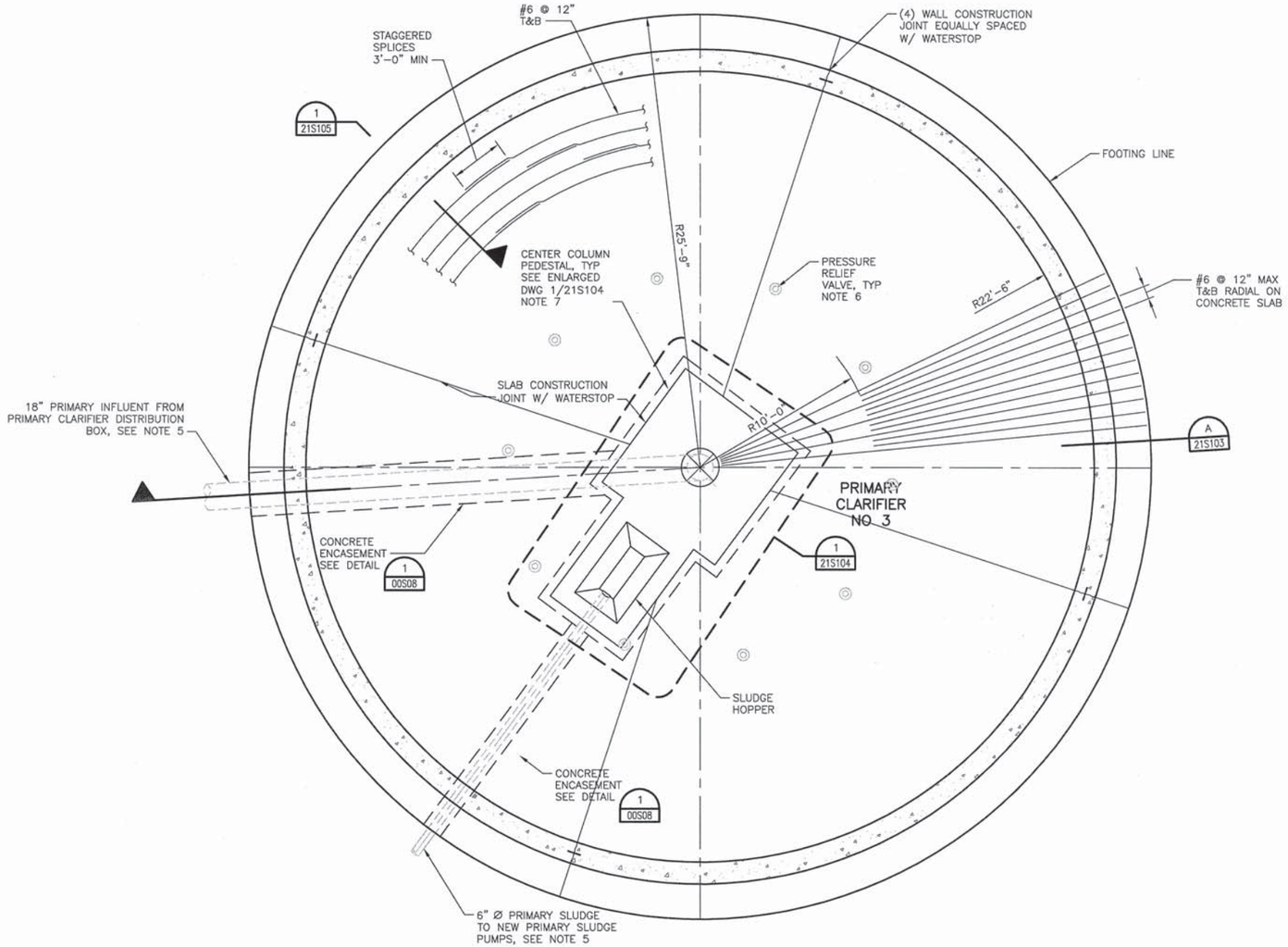

PRIMARY CLARIFIER–FOUNDATION PLAN

SCALE: 1/4 = 1'-0"

NOTES:

1. FOR GENERAL NOTES, SEE SHEET 00S01 AND 00S02.
2. FOR SPECIAL INSPECTION REQUIREMENTS, SEE 00S03 AND 00S04.
3. FOR TYPICAL CONCRETE DETAILS, SEE SHEETS 00S05 THRU 00S08.
4. FOR TYPICAL REINFORCING DETAILS, SEE 00S09.
5. COORDINATE PIPING LOCATION, ORIENTATION, ELEVATIONS, AND CONCRETE PENETRATIONS WITH PROCESS/MECHANICAL DRAWINGS.
6. REFER TO PROCESS DRAWINGS FOR LOCATIONS AND AMOUNT OF PRESSURE RELIEF VALVES.
7. PEDESTAL SIZE AND REINFORCEMENT ARE BASED ON MECHANISM INFORMATION AT PRE–DESIGN STAGE. CONSTRUCTOR SHALL PROVIDE ALL DESIGN LOADS AT PEDESTAL BASE FOR ENGINEER OF RECORD TO VERIFY PEDESTAL DESIGN BEFORE CONSTRUCTION.

TRUE NORTH

PROJECT NORTH

FILE: 215786–21S101.dwg
DATE: Jun 29, 2015– 3:55:51pm, jwebb

HDR Engineering, Inc.

ISSUE	DATE	DESCRIPTION
A	JUNE 2015	ISSUED FOR BID

PROJECT MANAGER	C. OLSON
DESIGNED	Z. LI
DESIGNED	
CHECKED	O. TAVANGAR
DRAWN	D. ELDREDGE
DATE	JUNE 30, 2015
PROJECT NUMBER	215786

REGISTERED PROFESSIONAL ENGINEER — ZHEN LI — NO. 74809 — EXP. 12/31/15 — 6/30/2015 — CIVIL — STATE OF CALIFORNIA

CITY OF PINOLE CALIFORNIA 1903

PINOLE/HERCULES
WATER POLLUTION
CONTROL PLANT UPGRADE
CLIENT PN

STRUCTURAL

PRIMARY CLARIFIER NO 3 FOUNDATION PLAN

0 1" 2"

FILENAME	215786–21S101
SCALE	AS NOTED

SHEET **21S101**

NOTES:

1. FOR GENERAL NOTES, SEE SHEET 00S01 AND 00S02.
2. FOR SPECIAL INSPECTION REQUIREMENTS, SEE 00S03 AND 00S04.
3. FOR TYPICAL CONCRETE DETAILS, SEE SHEETS 00S05 THRU 00S08.
4. FOR TYPICAL REINFORCING DETAILS, SEE 00S09.
5. FOR TYPICAL GRATING DETAIL, SEE SHEET 00S14.
6. FOR TYPICAL RAILING DETAILS, SEE SHEET 00S15.
7. DENOTES CHANGE IN TOP OF CONCRETE ELEVATION.
8. X.XX' DENOTES POINT ELEVATION.
9. COORDINATE PIPING AND EQUIPMENT LOCATIONS, ORIENTATION, ELEVATIONS, AND CONCRETE PENETRATIONS WITH PROCESS/MECHANICAL DRAWINGS.
10. VERIFY AND COORDINATE LANDING SIZE WITH DIMENSIONS OF SUPPLIED EQUIPMENT.

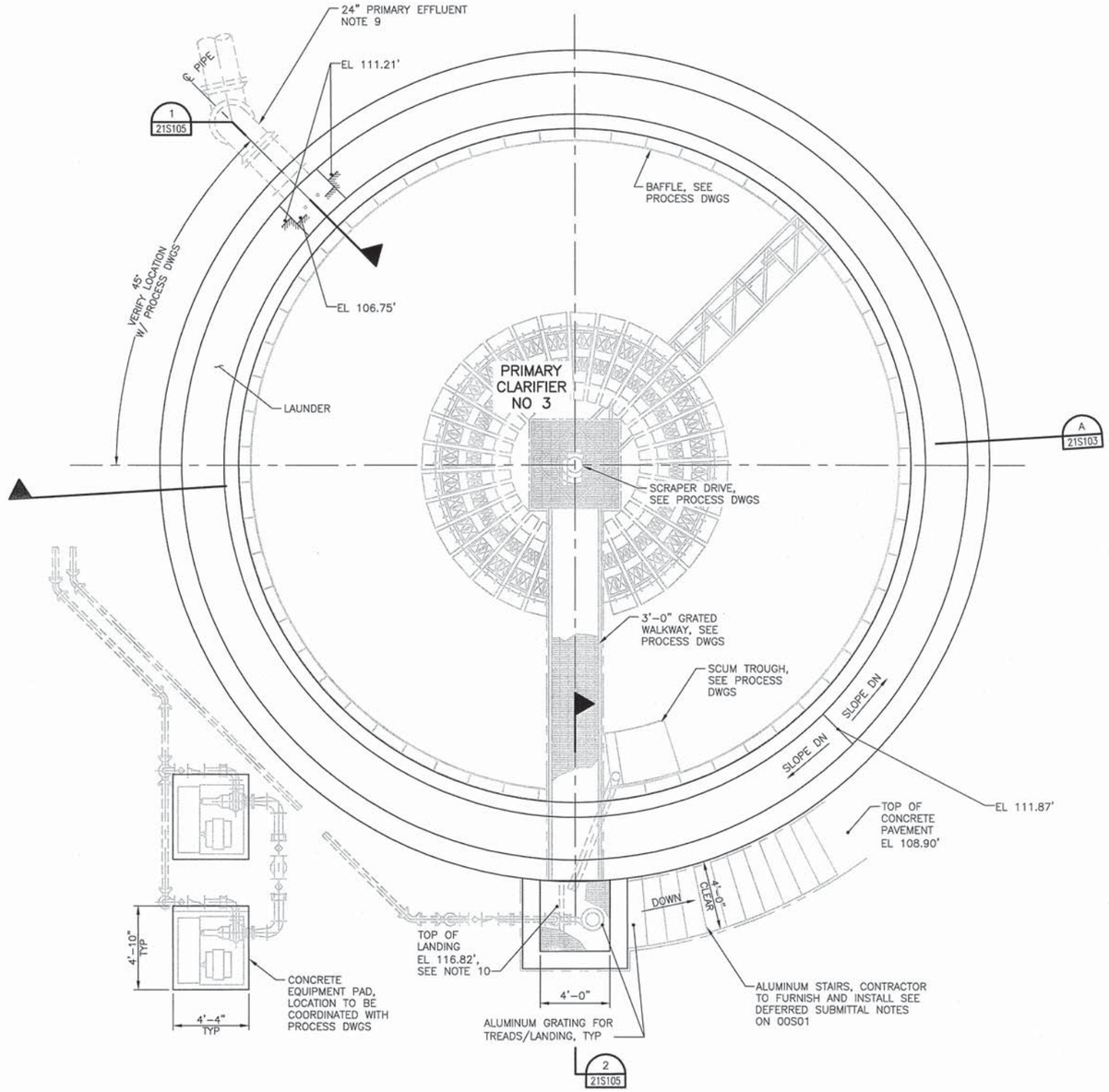

PRIMARY CLARIFIER–TOP PLAN

SCALE: 1/4 = 1'-0"

TRUE NORTH

PROJECT NORTH

FILE: 215786-21S102.dwg
DATE: Jun 29, 2015 - 3:55:59pm, jwebb

HDR Engineering, Inc.

ISSUE	DATE	DESCRIPTION
A	JUNE 2015	ISSUED FOR BID

PROJECT MANAGER	C. OLSON
DESIGNED	Z. LI
DESIGNED	
CHECKED	O. TAVANGAR
DRAWN	D. ELDREDGE
DATE	JUNE 30, 2015
PROJECT NUMBER	215786

REGISTERED PROFESSIONAL ENGINEER — ZHEN LI — NO. 74809 — EXP. 12/31/15 — CIVIL — STATE OF CALIFORNIA

CITY OF PINOLE CALIFORNIA 1903

PINOLE/HERCULES WATER POLLUTION CONTROL PLANT UPGRADE
CLIENT PN

STRUCTURAL

PRIMARY CLARIFIER NO 3 TOP PLAN

0 1" 2"

FILENAME	215786-21S102
SCALE	AS NOTED

SHEET **21S102**

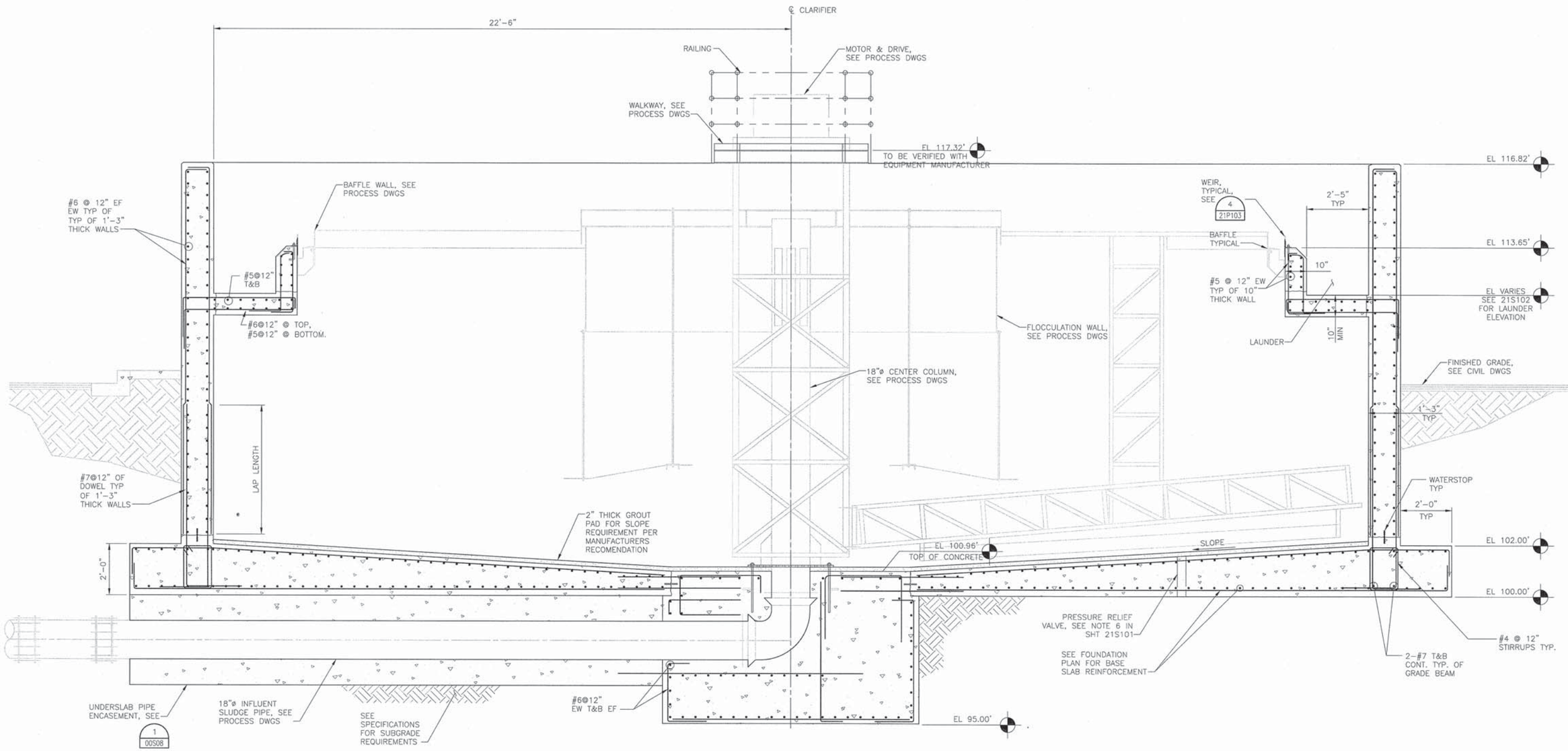

SECTION

SCALE: 1/2"=1'-0"

A 21S101

FILE: 215786-21S103.dwg
DATE: Jun 29, 2015-4:33:55pm, sieri

HDR Engineering, Inc.

ISSUE	DATE	DESCRIPTION
A	JUNE 2015	ISSUED FOR BID

PROJECT MANAGER	C. OLSON
DESIGNED	Z. LI
DESIGNED	
CHECKED	O. TAVANGAR
DRAWN	D.ELDREDGE
DATE	JUNE 30, 2015
PROJECT NUMBER	215786

REGISTERED PROFESSIONAL ENGINEER
ZHEN LI
NO. 74809
EXP. 12/31/15
6/30/2015
CIVIL
STATE OF CALIFORNIA

CITY OF PINOLE CALIFORNIA 1903

PINOLE/HERCULES
WATER POLLUTION
CONTROL PLANT UPGRADE
CLIENT PN

STRUCTURAL

PRIMARY CLARIFIER NO 3 SECTION

0 1" 2"

FILENAME	215786-21S103
SCALE	AS NOTED

SHEET **21S103**

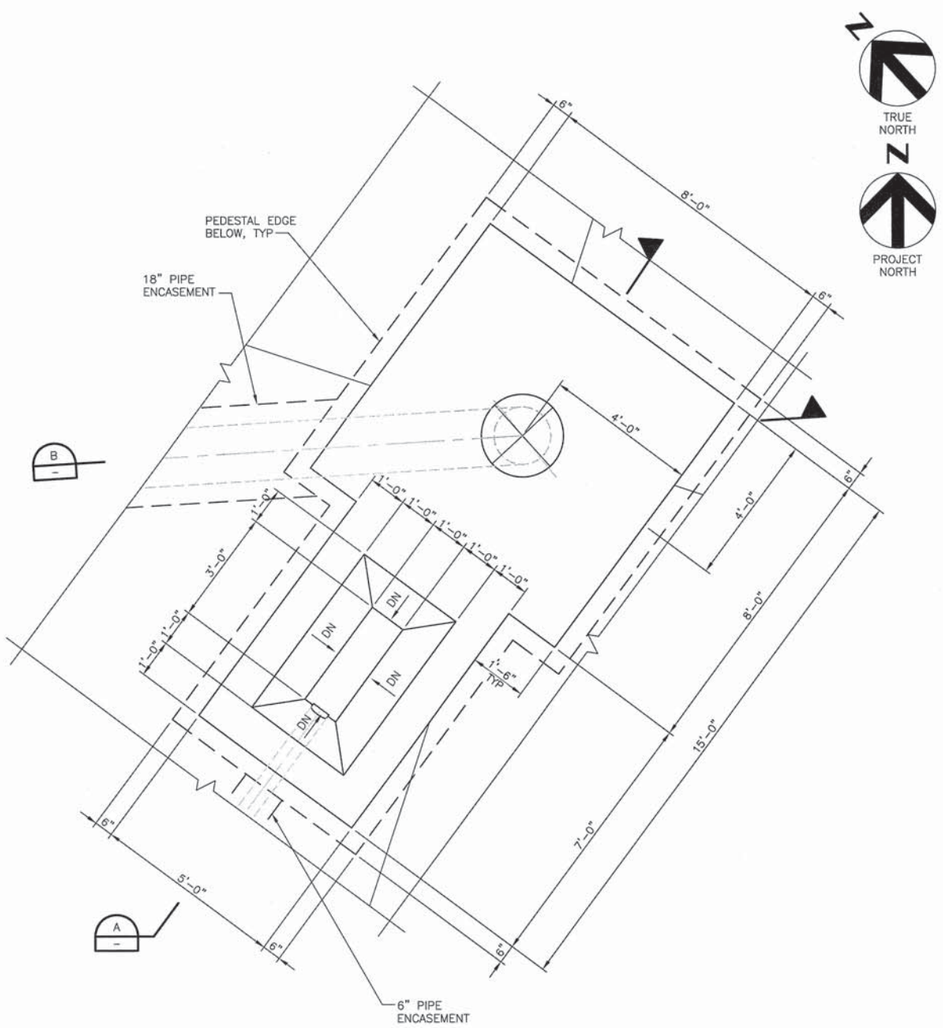

ENLARGED PLAN
1/2" = 1'-0"

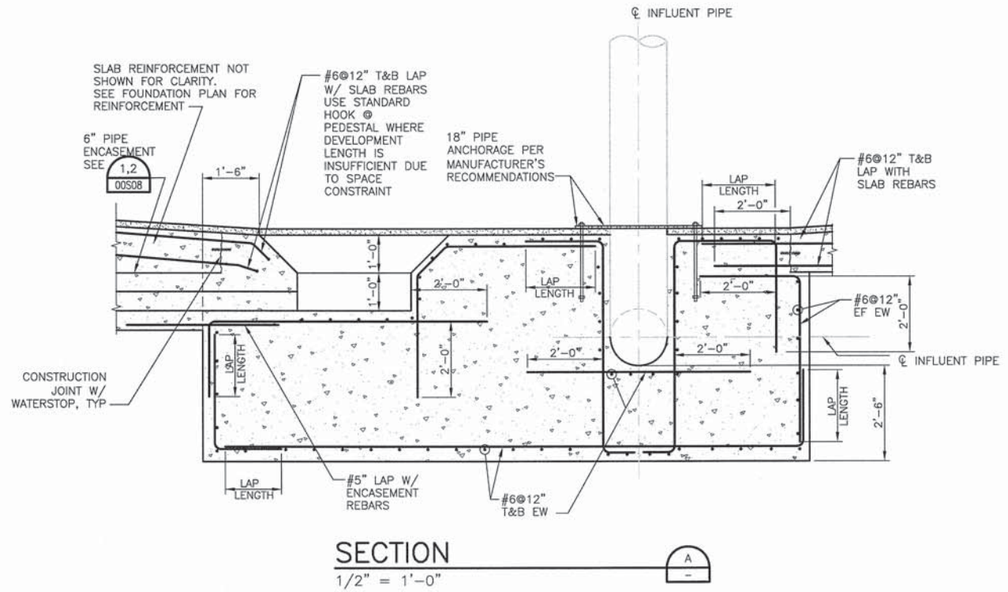

SECTION
1/2" = 1'-0"

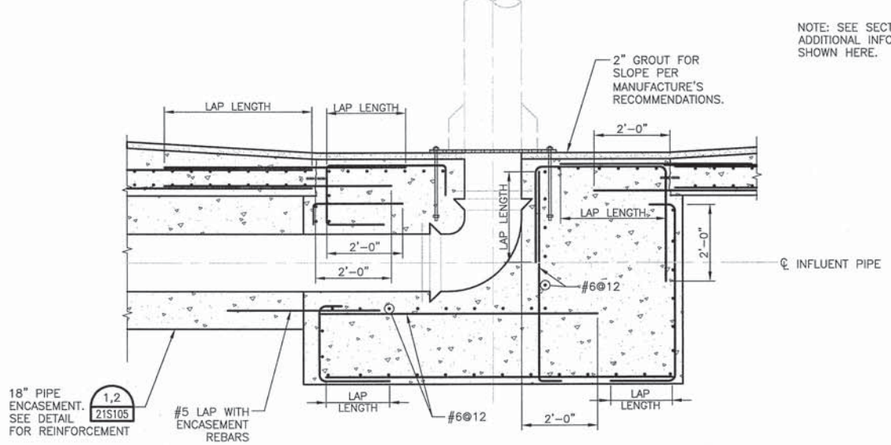

SECTION
1/2" = 1'-0"

ISSUE	DATE	DESCRIPTION
A	JUNE 2015	ISSUED FOR BID

PROJECT MANAGER	C. OLSON
DESIGNED	Z. LI
DESIGNED	
CHECKED	C. OLSON
DRAWN	D.ELDREDGE
DATE	JUNE 30, 2015
PROJECT NUMBER	215786

REGISTERED PROFESSIONAL ENGINEER ZHEN LI NO. 74809 EXP. 12/31/15 CIVIL STATE OF CALIFORNIA

HDR Engineering, Inc.

CITY OF PINOLE CALIFORNIA 1903

PINOLE/HERCULES WATER POLLUTION CONTROL PLANT UPGRADE
CLIENT PN

STRUCTURAL

PRIMARY CLARIFIER NO 3 ENLARGED PLAN AND DETAILS

0 1" 2"

FILENAME	215786-21S104
SCALE	AS NOTED

SHEET 21S104

FILE: 215786-21S104.dwg
DATE: Jun 29, 2015-8:08:18pm, zhli

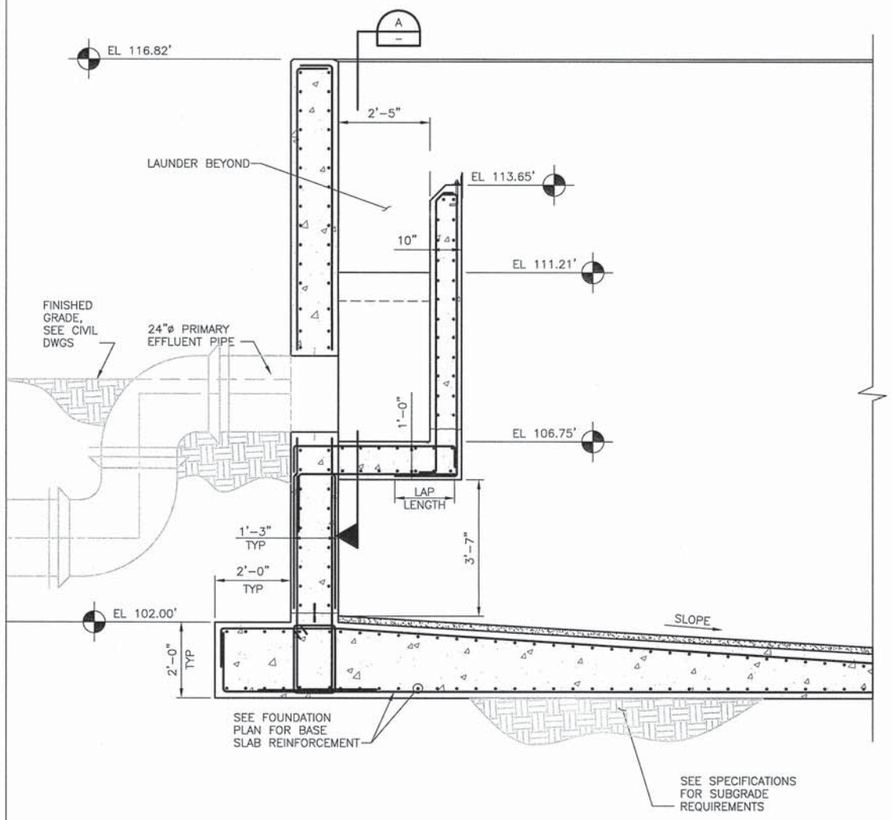

DETAIL
SCALE: 1/2"=1'-0"
1 / 21S101

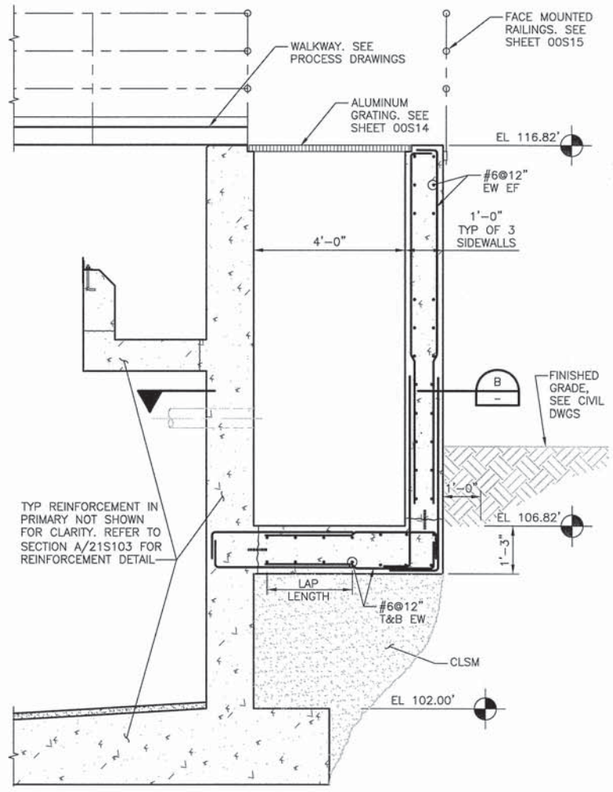

SECTION
SCALE: 1/2"=1'-0"
2 / 21S102

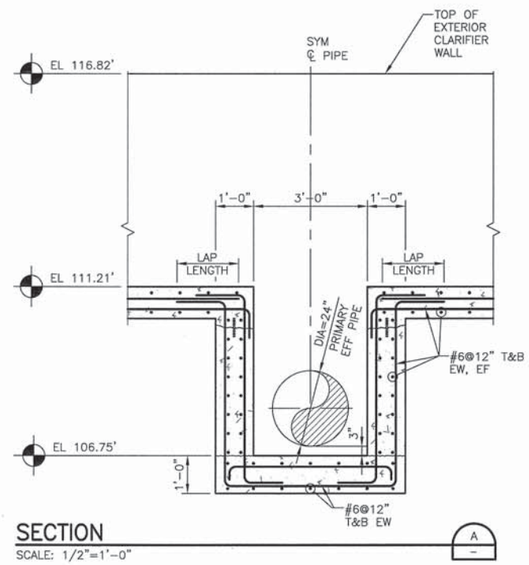

SECTION
SCALE: 1/2"=1'-0"
A

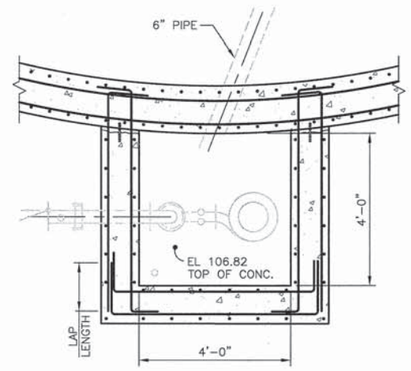

SECTION
SCALE: 1/2"=1'-0"
B

FILE: 215786-21S105.dwg
DATE: Jun 29, 2015 - 8:04:47pm, zhli

HDR
HDR Engineering, Inc.

ISSUE	DATE	DESCRIPTION
A	JUNE 2015	ISSUED FOR BID

PROJECT MANAGER	C. OLSON
DESIGNED	Z. LI
DESIGNED	
CHECKED	O. TAVANGAR
DRAWN	D.ELDREDGE
DATE	JUNE 30, 2015
PROJECT NUMBER	215786

REGISTERED PROFESSIONAL ENGINEER
ZHEN LI
NO. 74809
EXP. 12/31/15
CIVIL
STATE OF CALIFORNIA

CITY OF PINOLE CALIFORNIA 1903

PINOLE/HERCULES
WATER POLLUTION
CONTROL PLANT UPGRADE
CLIENT PN

STRUCTURAL

PRIMARY CLARIFIER NO 3 DETAILS

0 1" 2"

FILENAME	215786-21S105
SCALE	AS NOTED

SHEET
21S105

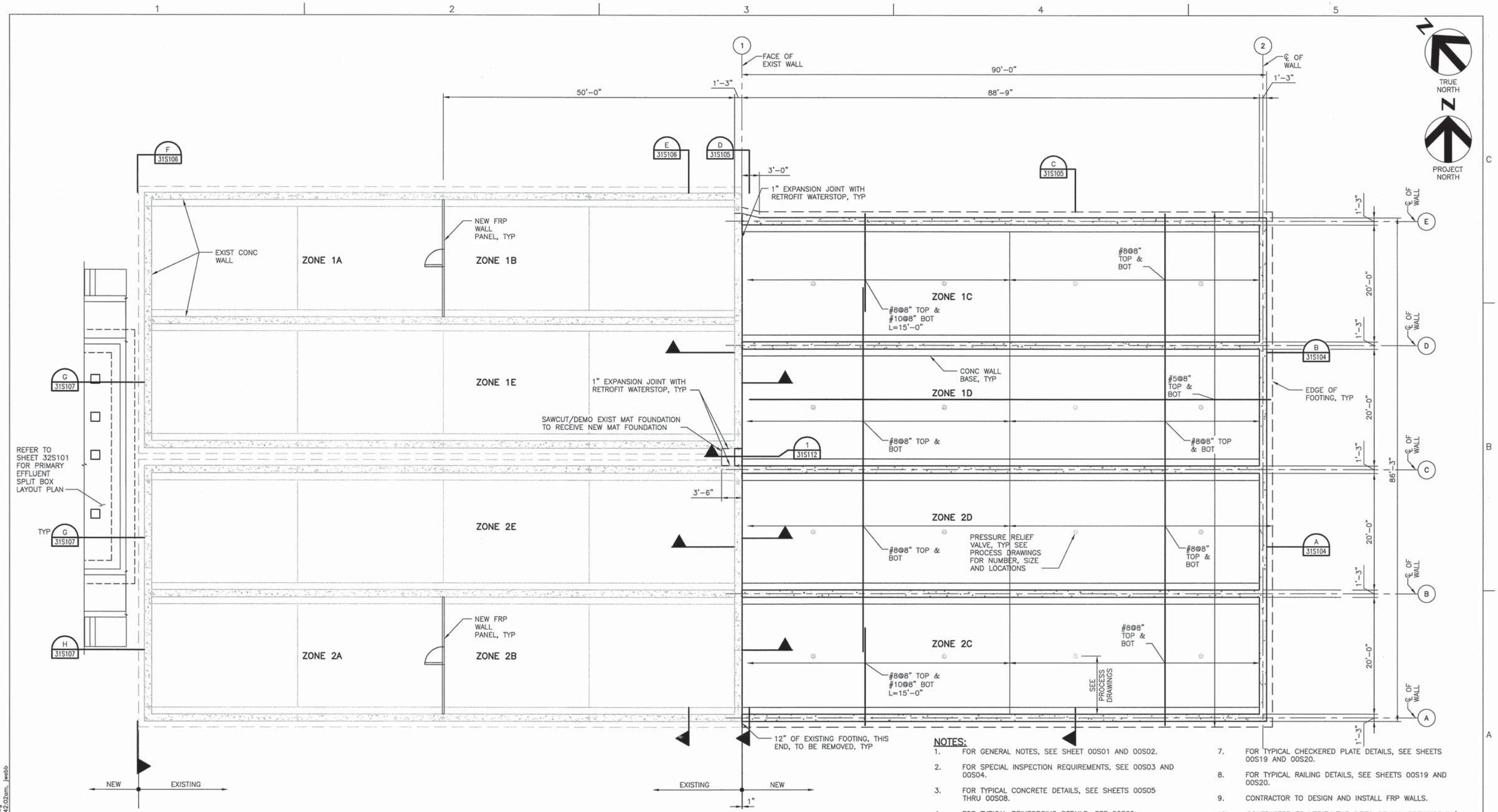

AERATION BASIN – FOUNDATION PLAN

1/8" = 1'-0"

NOTES:

1. FOR GENERAL NOTES, SEE SHEET 00S01 AND 00S02.
2. FOR SPECIAL INSPECTION REQUIREMENTS, SEE 00S03 AND 00S04.
3. FOR TYPICAL CONCRETE DETAILS, SEE SHEETS 00S05 THRU 00S08.
4. FOR TYPICAL REINFORCING DETAILS, SEE 00S09.
5. FOR TYPICAL CONCRETE BEAM, SLAB, AND REINFORCEMENTS SEE SHEETS 13S107 THRU 13S110.
6. ALUMINUM CHECKERED PLATE AND SUPPORT BEAM SIZES, RAILINGS WILL BE DESIGNED PER THE CONTRACTOR'S DESIGN. SEE DEFERRED SUBMITTALS ON SHEET 00S01.
7. FOR TYPICAL CHECKERED PLATE DETAILS, SEE SHEETS 00S19 AND 00S20.
8. FOR TYPICAL RAILING DETAILS, SEE SHEETS 00S19 AND 00S20.
9. CONTRACTOR TO DESIGN AND INSTALL FRP WALLS.
10. CONTRACTOR TO VERIFY THE SIZES OF ALL OPENINGS W/ PROCESS DRAWINGS.
11. FOR NUMBER, SIZE AND SPACING OF PRESSURE RELIEF VALVE, SEE PROCESS DRAWINGS.

FILE: 215786-31S101.dwg
DATE: Jun 30, 2015-8:42:02am, jwebb

HDR Engineering, Inc.

ISSUE	DATE	DESCRIPTION
A	JUNE 2015	ISSUED FOR BID

PROJECT MANAGER	C. OLSON
DESIGNED	M MOSTAFA
DESIGNED	
CHECKED	O. TAVANGAR
DRAWN	D. ELDREDGE
DATE	JUNE 30, 2015
PROJECT NUMBER	215786

REGISTERED PROFESSIONAL ENGINEER MOHAMMADREZA MOSTAFA NO. 78649 EXP. 09/30/15 CIVIL STATE OF CALIFORNIA 06/30/15

CITY OF PINOLE CALIFORNIA 1903

PINOLE/HERCULES
WATER POLLUTION
CONTROL PLANT UPGRADE
CLIENT PN

STRUCTURAL

AERATION BASINS EXPANSION FOUNDATION PLAN

0 1" 2"

FILENAME	215786-31S101
SCALE	AS NOTED

SHEET **31S101**

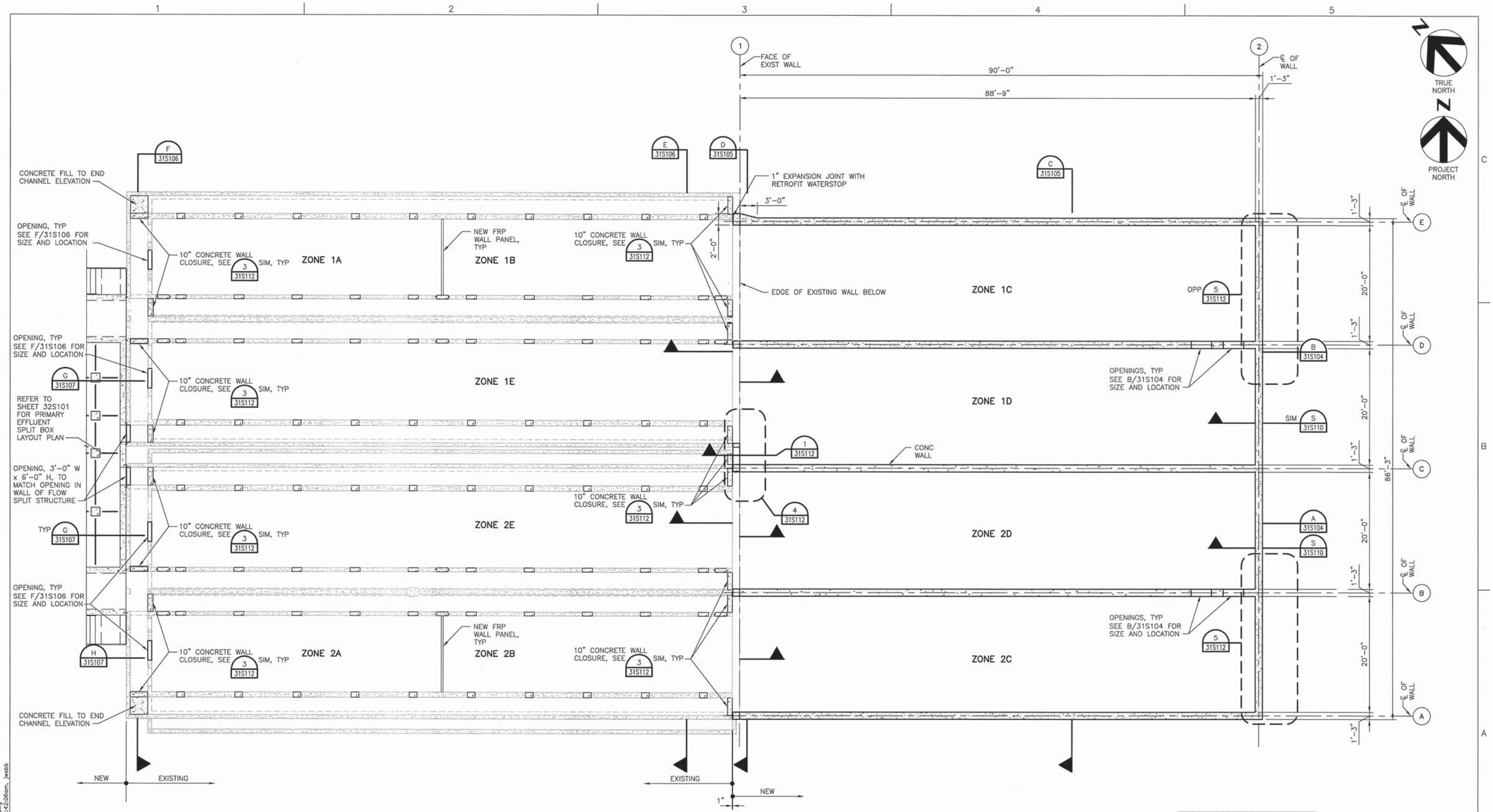

AERATION BASIN – PLAN AT 109.5

1/8" = 1'-0"

SEE NOTES ON 31S101

FILE: 215786–31S102.dwg
DATE: Jun 30, 2015–8:42:06am, jwebb

HDR Engineering, Inc.

ISSUE	DATE	DESCRIPTION
A	JUNE 2015	ISSUED FOR BID

PROJECT MANAGER	C. OLSON
DESIGNED	M MOSTAFA
DESIGNED	
CHECKED	O. TAVANGAR
DRAWN	D. ELDREDGE
DATE	JUNE 30, 2015
PROJECT NUMBER	215786

REGISTERED PROFESSIONAL ENGINEER MOHAMMADREZA MOSTAFA NO. 78649 EXP. 09/30/15 CIVIL STATE OF CALIFORNIA 06/30/15

CITY OF PINOLE CALIFORNIA 1903

PINOLE/HERCULES
WATER POLLUTION
CONTROL PLANT UPGRADE
CLIENT PN

STRUCTURAL

AERATION BASINS EXPANSION PLAN AT 109.5

0 1" 2"

FILENAME	215786–31S102
SCALE	AS NOTED

SHEET **31S102**

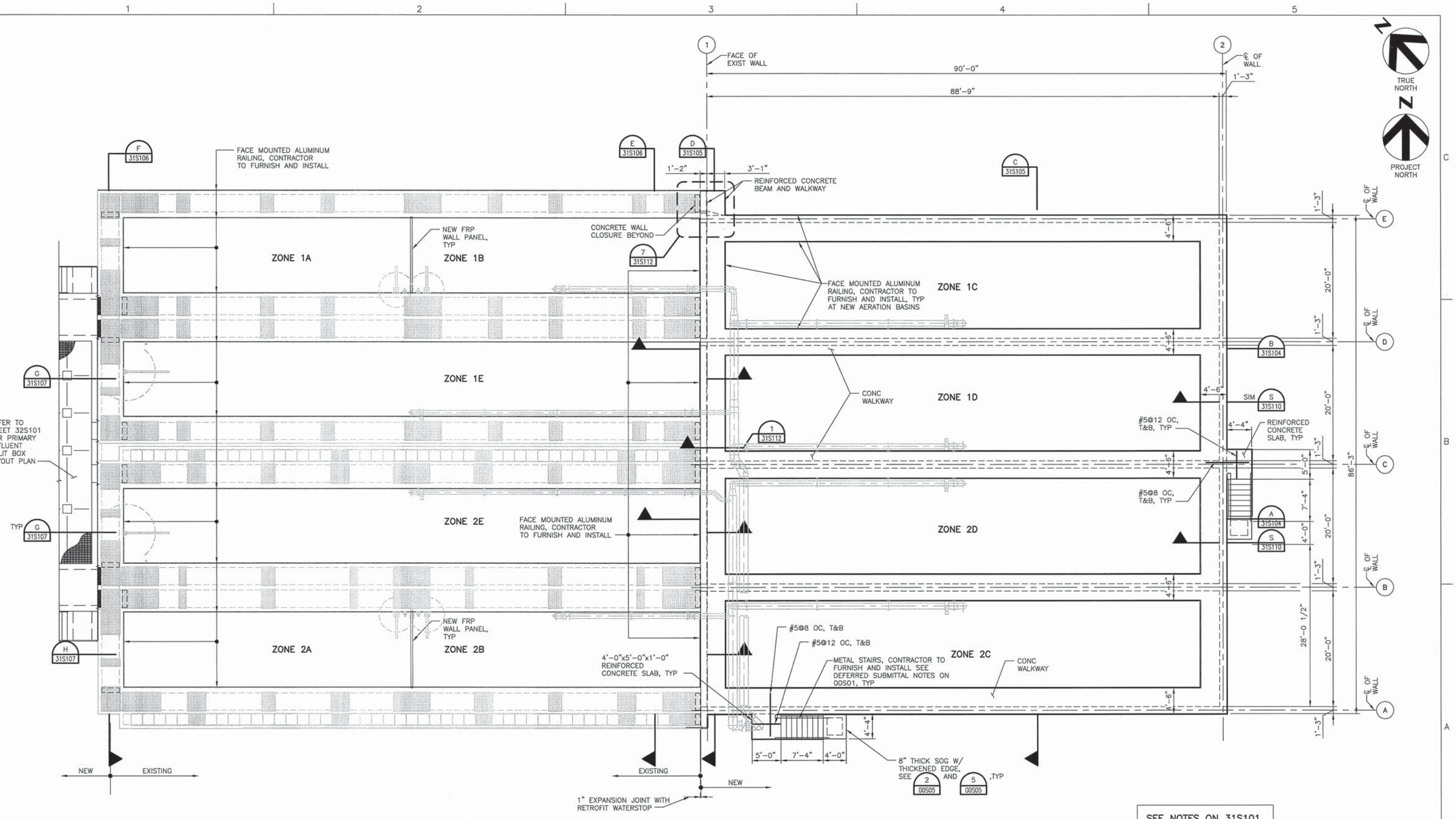

SEE NOTES ON 31S101

AERATION BASIN – TOP PLAN

1/8" = 1'-0"

FILE: 215786-31S103.dwg
DATE: Jun 30, 2015-8:42:10am, jwebb

HDR Engineering, Inc.

ISSUE	DATE	DESCRIPTION
A	JUNE 2015	ISSUED FOR BID

PROJECT MANAGER	C. OLSON
DESIGNED	M MOSTAFA
DESIGNED	
CHECKED	O. TAVANGAR
DRAWN	D. ELDREDGE
DATE	JUNE 30, 2015
PROJECT NUMBER	215786

REGISTERED PROFESSIONAL ENGINEER
MOHAMMADREZA MOSTAFA
NO. 78649
EXP. 09/30/15
CIVIL
STATE OF CALIFORNIA
06/30/15

CITY OF PINOLE CALIFORNIA 1903

PINOLE/HERCULES
WATER POLLUTION
CONTROL PLANT UPGRADE
CLIENT PN

STRUCTURAL

AERATION BASINS EXPANSION TOP PLAN

0 1" 2"

FILENAME	215786-31S103
SCALE	AS NOTED

SHEET **31S103**

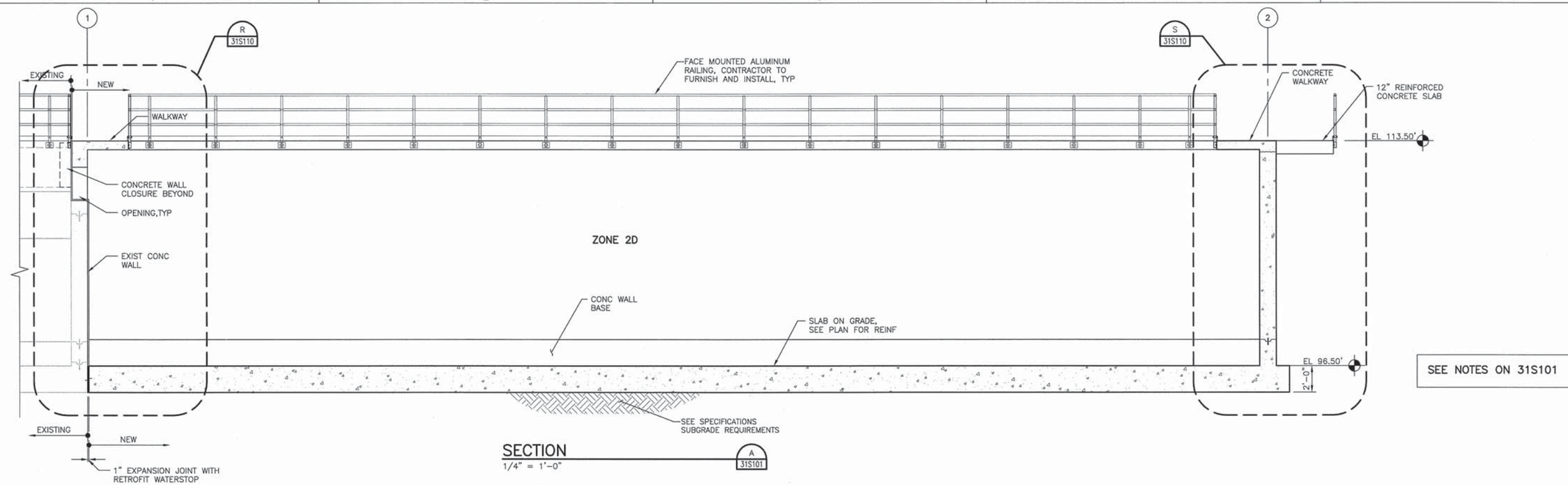

FILE: 215786-31S104.dwg
DATE: Jun 30, 2015-8:42:14am, jwebb

HDR Engineering, Inc.

ISSUE	DATE	DESCRIPTION
A	JUNE 2015	ISSUED FOR BID

PROJECT MANAGER	C. OLSON
DESIGNED	M MOSTAFA
DESIGNED	
CHECKED	O. TAVANGAR
DRAWN	D. ELDREDGE
DATE	JUNE 30, 2015
PROJECT NUMBER	215786

REGISTERED PROFESSIONAL ENGINEER
MOHAMMADREZA MOSTAFA
NO. 78649
EXP. 09/30/15
CIVIL
STATE OF CALIFORNIA
06/30/15

CITY OF PINOLE CALIFORNIA 1903

PINOLE/HERCULES
WATER POLLUTION
CONTROL PLANT UPGRADE
CLIENT PN

STRUCTURAL

AERATION BASINS EXPANSION SECTIONS 1

0 1" 2"

FILENAME	215786-31S104
SCALE	AS NOTED

SHEET
31S104

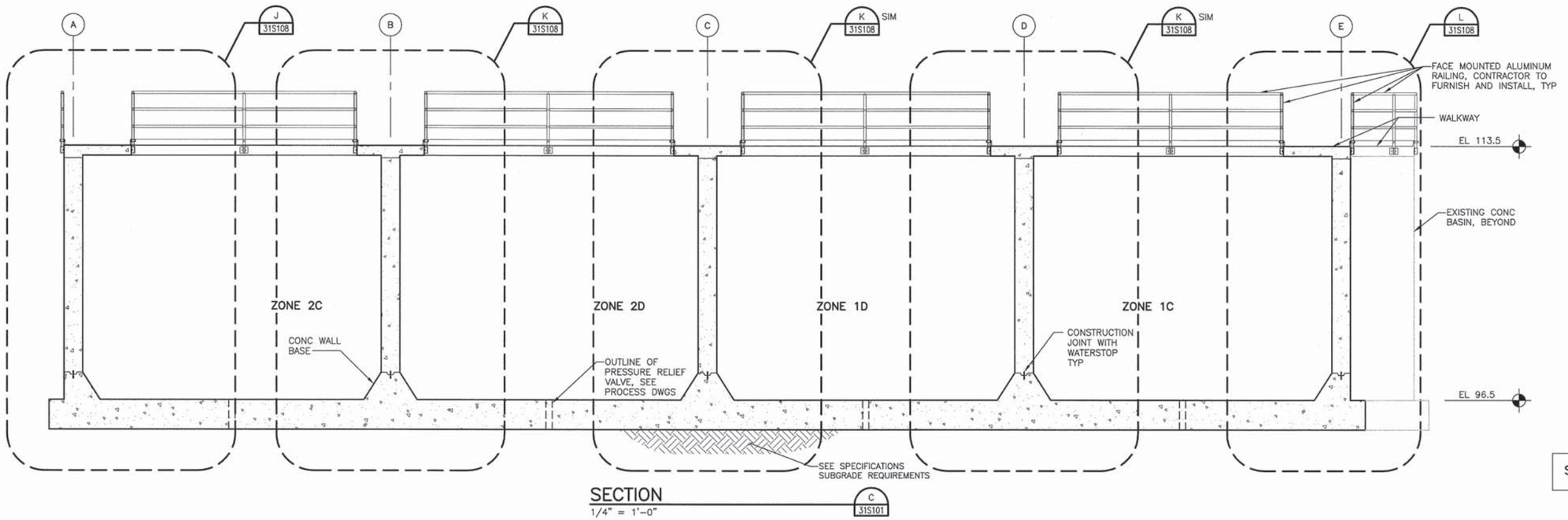

SECTION
1/4" = 1'-0"
C 31S101

SEE NOTES ON 31S101

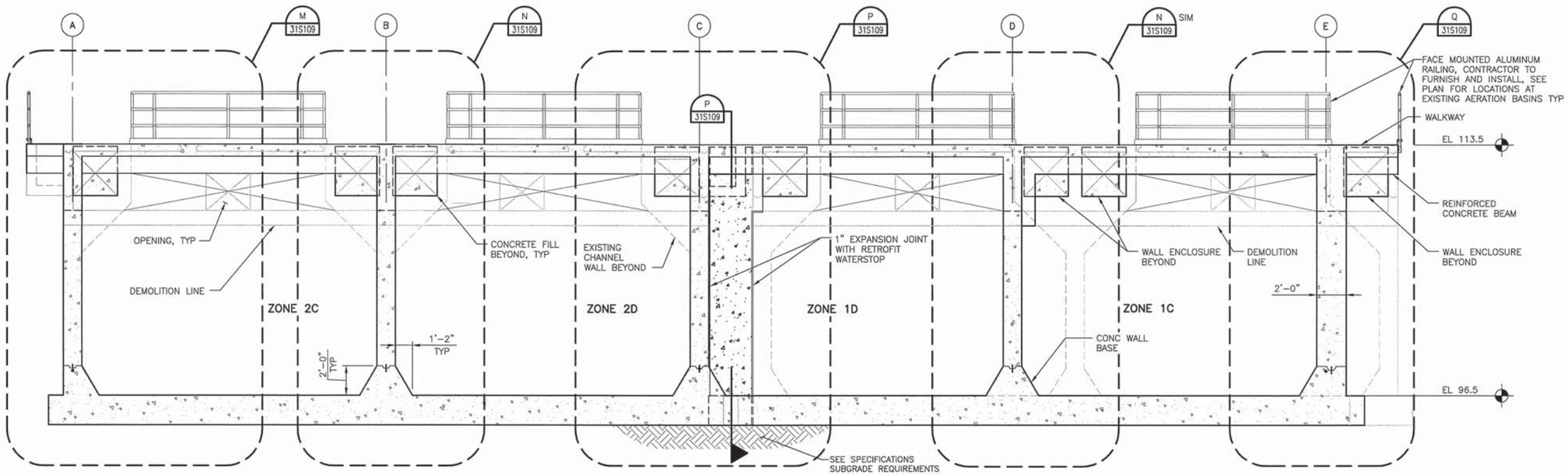

SECTION
1/4" = 1'-0"
D 31S101

FILE: 215786-31S105.dwg
DATE: Jun 30, 2015-8:42:18am, jwebb

HDR
HDR Engineering, Inc.

ISSUE	DATE	DESCRIPTION
A	JUNE 2015	ISSUED FOR BID

PROJECT MANAGER	C. OLSON
DESIGNED	M MOSTAFA
DESIGNED	
CHECKED	O. TAVANGAR
DRAWN	D. ELDREDGE
DATE	JUNE 30, 2015
PROJECT NUMBER	215786

REGISTERED PROFESSIONAL ENGINEER
MOHAMMADREZA MOSTAFA
NO. 78649
EXP. 09/30/15
CIVIL
STATE OF CALIFORNIA
06/30/15

CITY OF PINOLE CALIFORNIA 1903

PINOLE/HERCULES
WATER POLLUTION
CONTROL PLANT UPGRADE
CLIENT PN

STRUCTURAL

AERATION BASINS EXPANSION SECTIONS 2

0 1" 2"

FILENAME	215786-31S105
SCALE	AS NOTED

SHEET
31S105

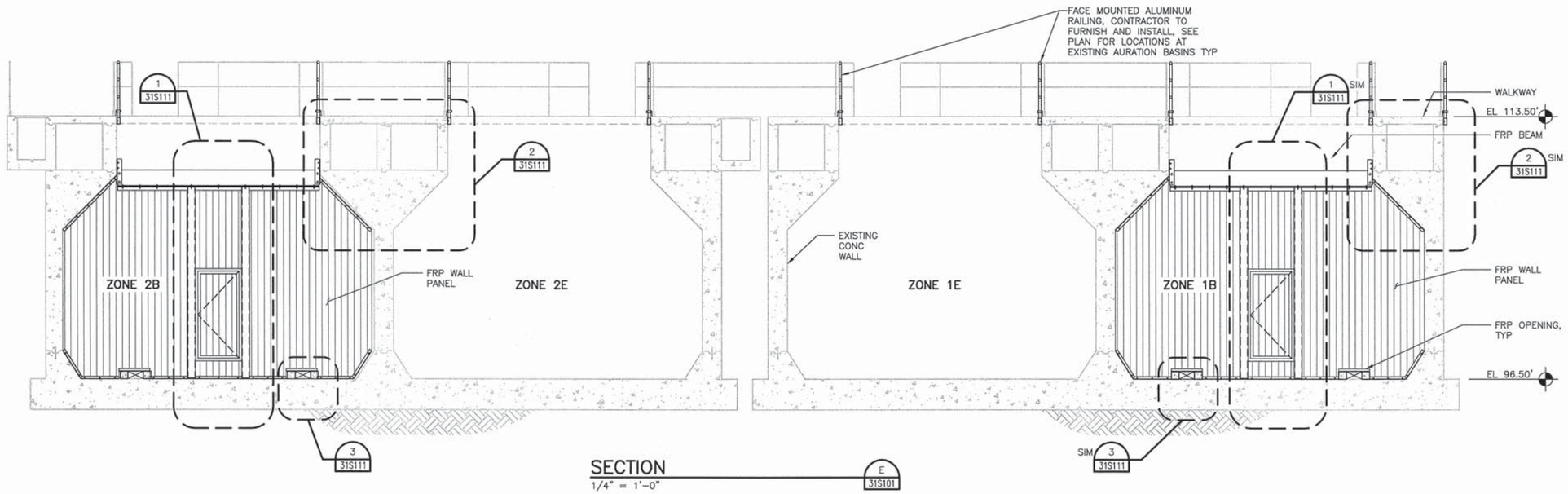

SECTION
1/4" = 1'-0"
E 31S101

SEE NOTES ON 31S101

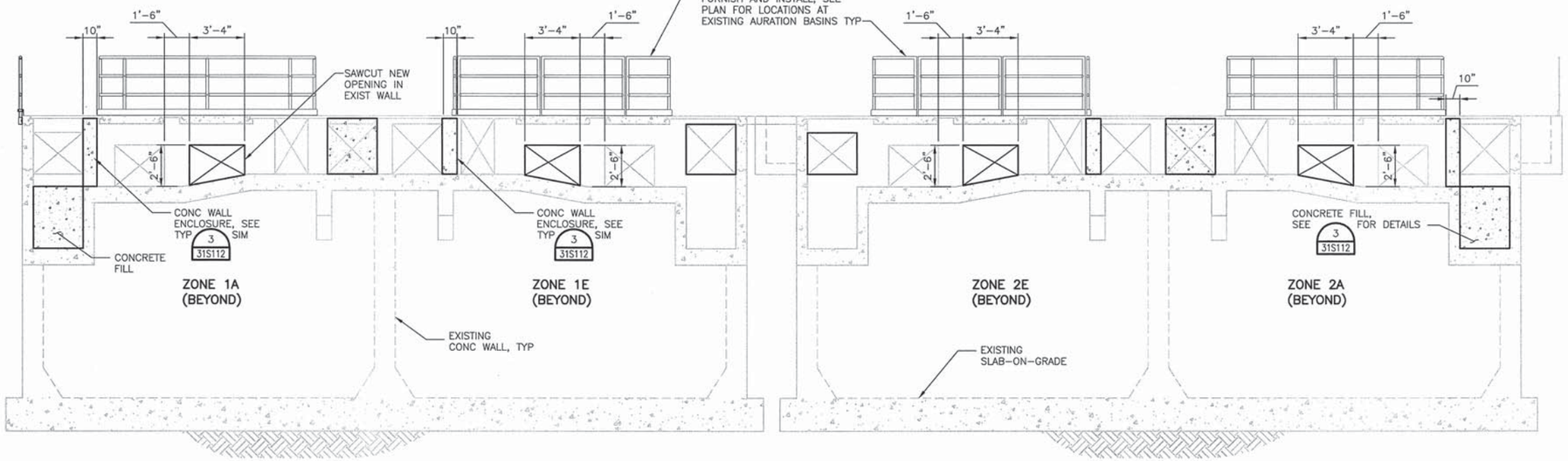

SECTION
1/4" = 1'-0"
F 31S101

FILE: 215786-31S106.dwg
DATE: Jun 30, 2015-8:42:22am, jwebb

HDR Engineering, Inc.

ISSUE	DATE	DESCRIPTION
A	JUNE 2015	ISSUED FOR BID

PROJECT MANAGER	C. OLSON
DESIGNED	M MOSTAFA
DESIGNED	
CHECKED	O. TAVANGAR
DRAWN	D. ELDREDGE
DATE	JUNE 30, 2015
PROJECT NUMBER	215786

REGISTERED PROFESSIONAL ENGINEER MOHAMMADREZA MOSTAFA NO. 78649 EXP. 09/30/15 CIVIL STATE OF CALIFORNIA
06/30/15

CITY OF PINOLE CALIFORNIA 1903

PINOLE/HERCULES
WATER POLLUTION
CONTROL PLANT UPGRADE
CLIENT PN

STRUCTURAL

AERATION BASINS EXPANSION SECTIONS 3

0 1" 2"

FILENAME	215786-31S106
SCALE	AS NOTED

SHEET
31S106

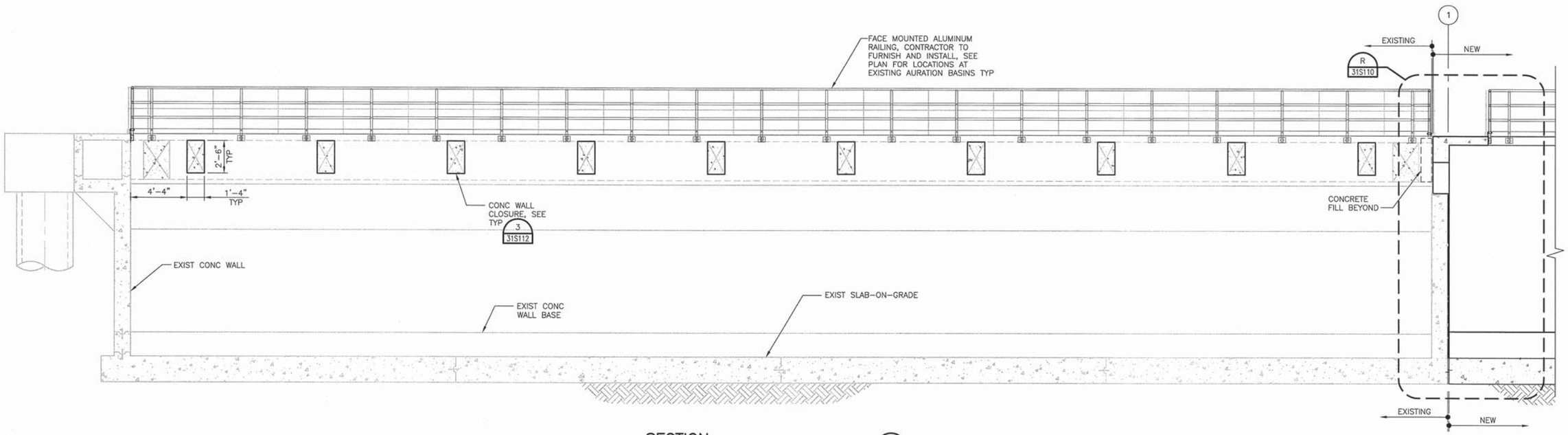

SECTION
1/4" = 1'-0"
G 31S101

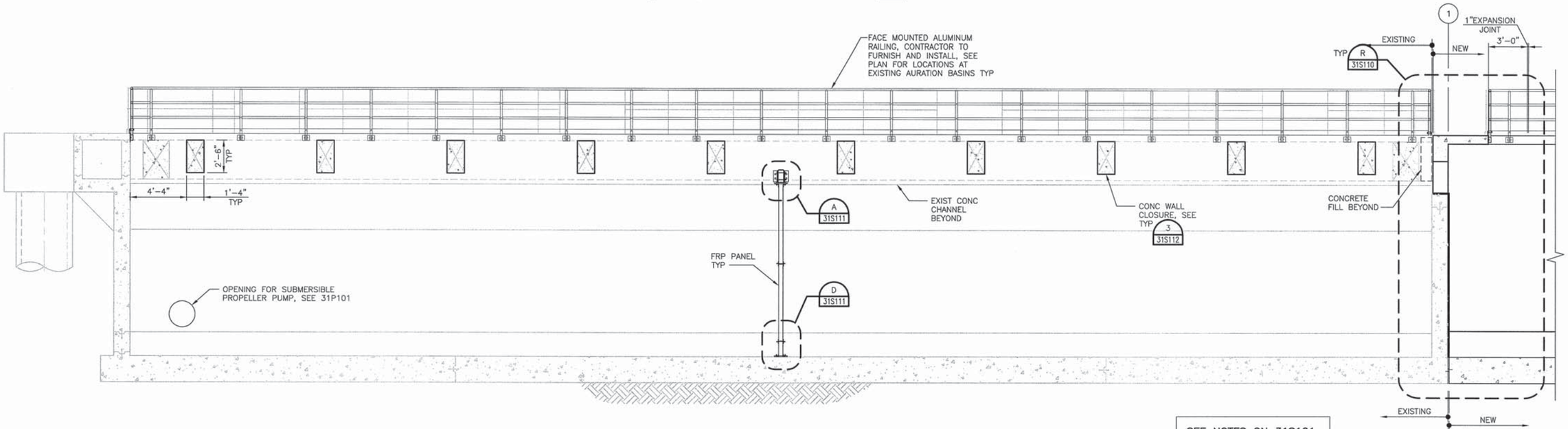

SECTION
1/4" = 1'-0"
H 31S101

SEE NOTES ON 31S101

FILE: 215786-31S107.dwg
DATE: Jun 30, 2015-8:42:27am, jwebb

HDR
HDR Engineering, Inc.

ISSUE	DATE	DESCRIPTION
A	JUNE 2015	ISSUED FOR BID

PROJECT MANAGER	C. OLSON
DESIGNED	M MOSTAFA
DESIGNED	
CHECKED	O. TAVANGAR
DRAWN	D. ELDREDGE
DATE	JUNE 30, 2015
PROJECT NUMBER	215786

REGISTERED PROFESSIONAL ENGINEER
MOHAMMADREZA MOSTAFA
NO. 78649
EXP. 09/30/15
CIVIL
STATE OF CALIFORNIA
06/30/15

CITY OF PINOLE CALIFORNIA 1903

PINOLE/HERCULES
WATER POLLUTION
CONTROL PLANT UPGRADE
CLIENT PN

STRUCTURAL

AERATION BASINS EXPANSION SECTIONS 4

0 1" 2"

FILENAME	215786-31S107
SCALE	AS NOTED

SHEET
31S107

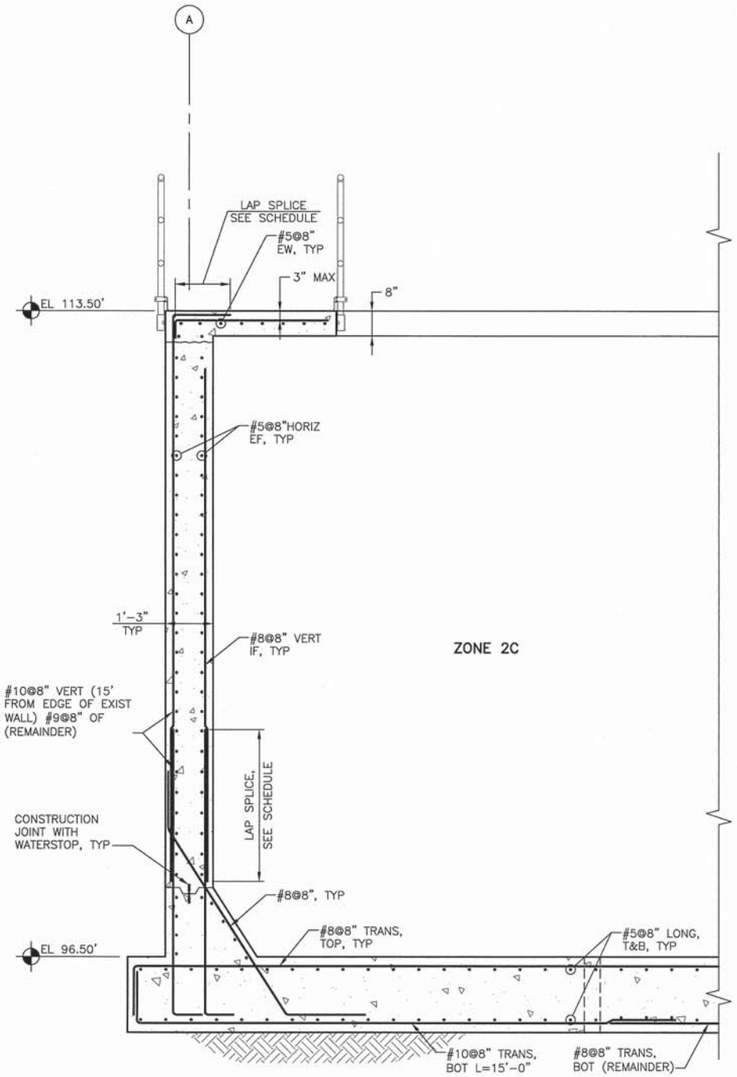

ZONE 2C

SECTION J 31S105
1/2" = 1'-0"

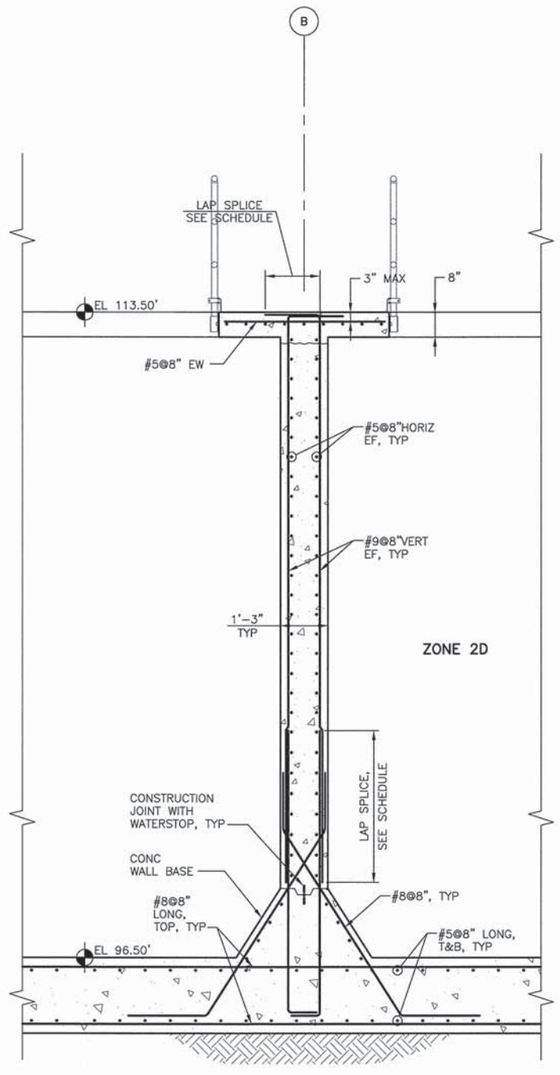

ZONE 2D

SECTION K 31S105
1/2" = 1'-0"

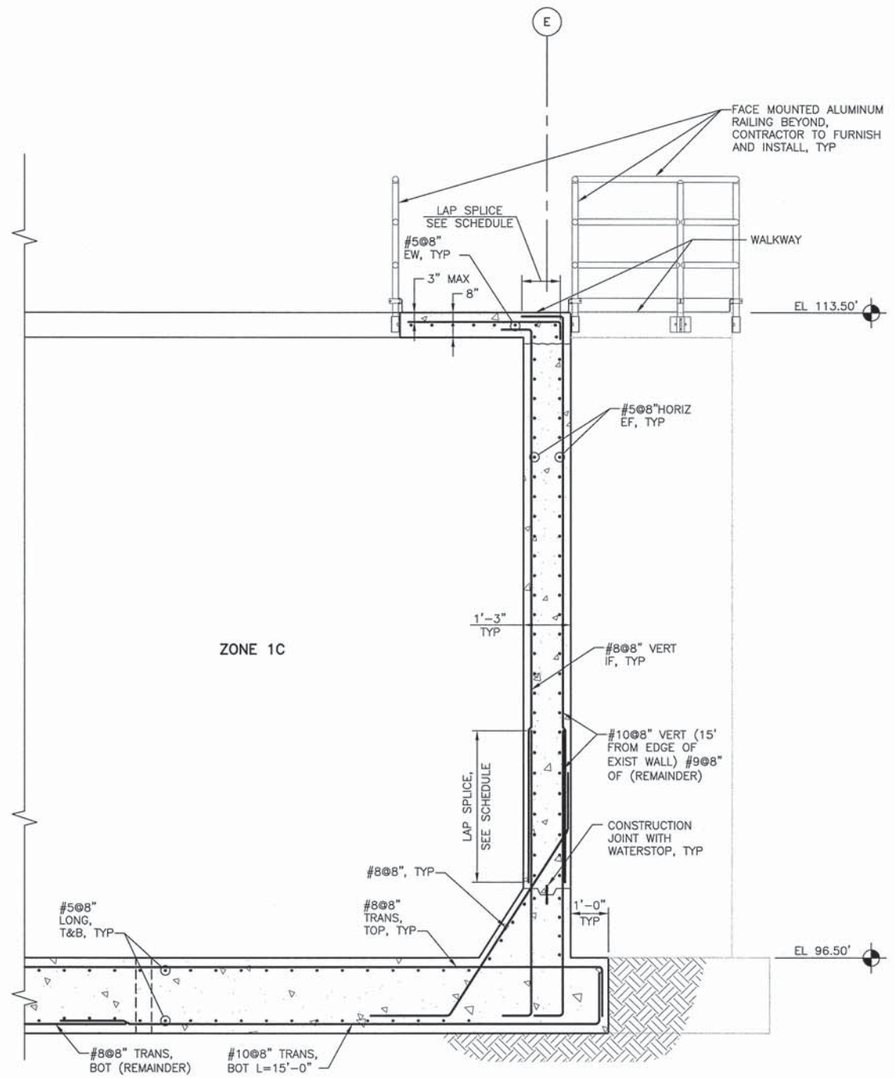

ZONE 1C

SECTION L 31S105
1/2" = 1'-0"

SEE NOTES ON 31S101

FILE: 215786-31S108.dwg
DATE: Jun 30, 2015-8:42:31am, jwebb

HDR Engineering, Inc.

ISSUE	DATE	DESCRIPTION
A	JUNE 2015	ISSUED FOR BID

PROJECT MANAGER	C. OLSON
DESIGNED	M MOSTAFA
DESIGNED	
CHECKED	O. TAVANGAR
DRAWN	D. ELDREDGE
DATE	JUNE 30, 2015
PROJECT NUMBER	215786

REGISTERED PROFESSIONAL ENGINEER MOHAMMADREZA MOSTAFA NO. 78649 EXP. 09/30/15 CIVIL STATE OF CALIFORNIA 06/30/15

CITY OF PINOLE CALIFORNIA 1903

PINOLE/HERCULES
WATER POLLUTION
CONTROL PLANT UPGRADE
CLIENT PN

STRUCTURAL

AERATION BASINS EXPANSION SECTIONS AND DETAILS

0 1" 2"

FILENAME	215786-31S108
SCALE	AS NOTED

SHEET **31S108**

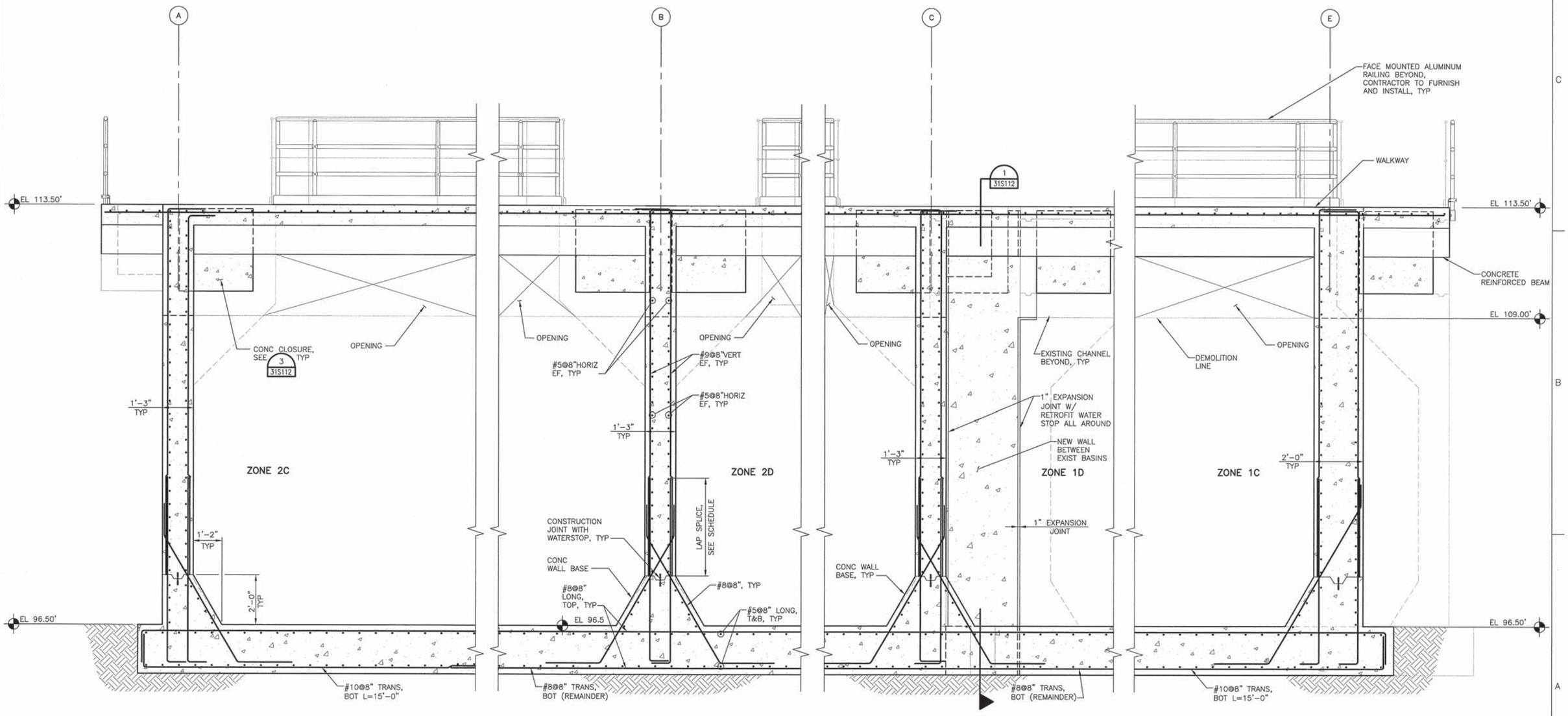

NOTE:
FOR INFO NOT SHOWN, SEE N/31S109 SIM

NOTE:
FOR WALL REINF BEYOND NEW TO EXIST TRANSITION SEE SHEET 31S108, TYP

NOTE:
FOR INFO NOT SHOWN, SEE N/31S109

NOTE:
FOR INFO NOT SHOWN, SEE N/31S109 SIM

SECTION M 31S105
1/2" = 1'-0"

SECTION N 31S105
1/2" = 1'-0"

SECTION P 31S105
1/2" = 1'-0"

SECTION Q 31S105
1/2" = 1'-0"

FILE: 215786-31S109.dwg
DATE: Jun 30, 2015-8:42:34am, jwebb

HDR Engineering, Inc.

ISSUE	DATE	DESCRIPTION
A	JUNE 2015	ISSUED FOR BID

PROJECT MANAGER	C. OLSON
DESIGNED	M MOSTAFA
DESIGNED	
CHECKED	O. TAVANGAR
DRAWN	D. ELDREDGE
DATE	JUNE 30, 2015
PROJECT NUMBER	215786

REGISTERED PROFESSIONAL ENGINEER MOHAMMADREZA MOSTAFA NO. 78649 EXP. 09/30/15 CIVIL STATE OF CALIFORNIA 06/30/15

CITY OF PINOLE CALIFORNIA 1903

PINOLE/HERCULES
WATER POLLUTION
CONTROL PLANT UPGRADE
CLIENT PN

STRUCTURAL

AERATION BASINS EXPANSION SECTIONS AND DETAILS

0 1" 2"

FILENAME	215786-31S109
SCALE	AS NOTED

SHEET 31S109

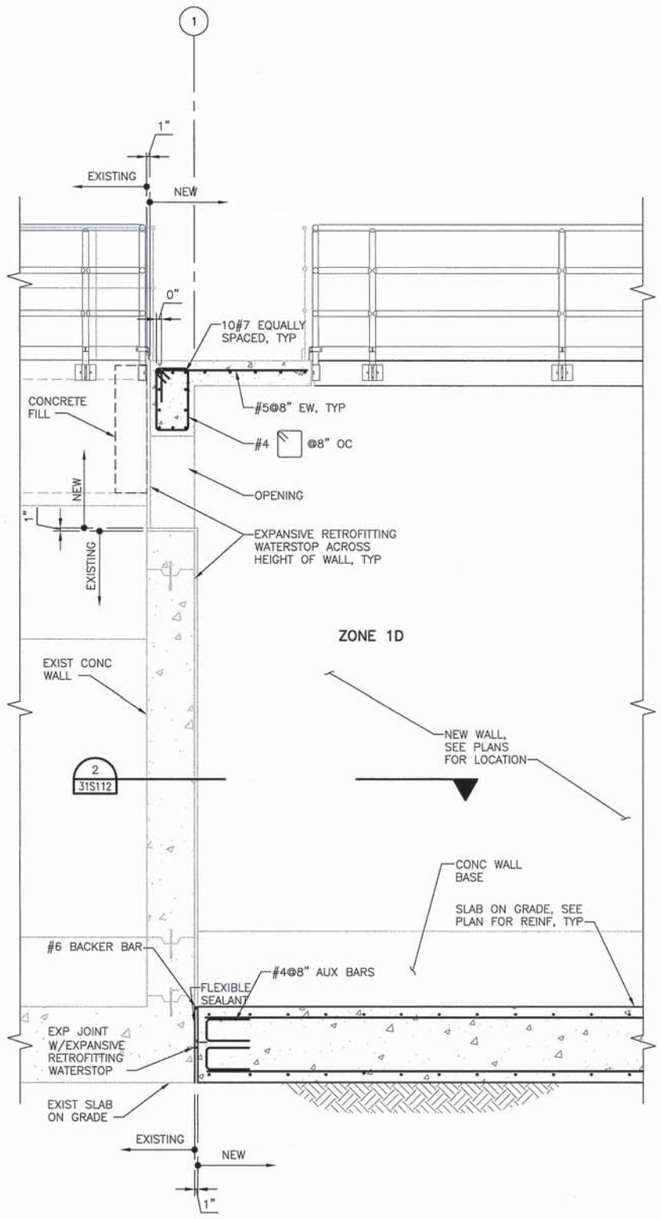

SECTION R 31S104
1/2" = 1'-0"

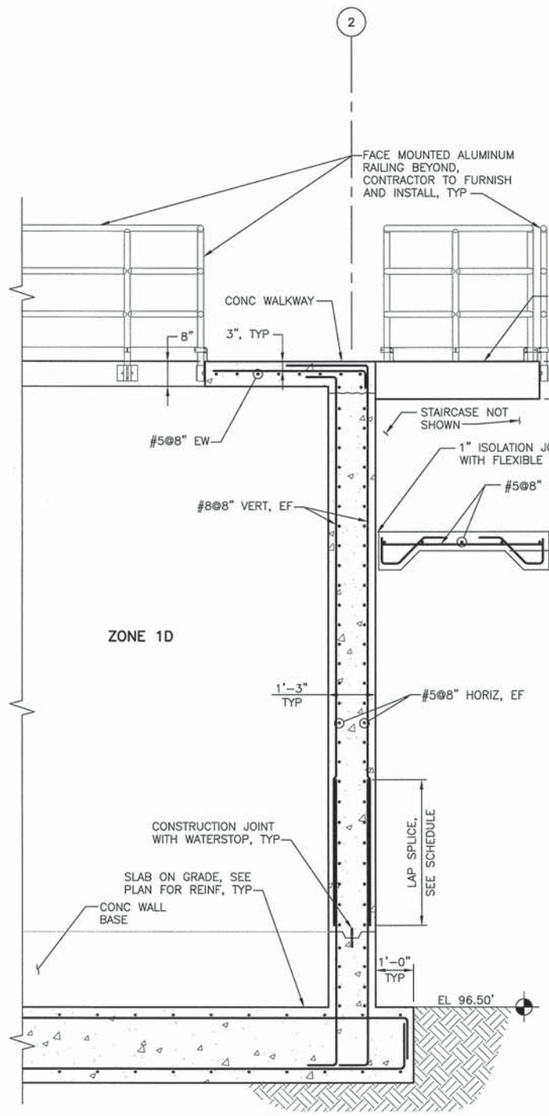

SECTION S 31S104
1/2" = 1'-0"

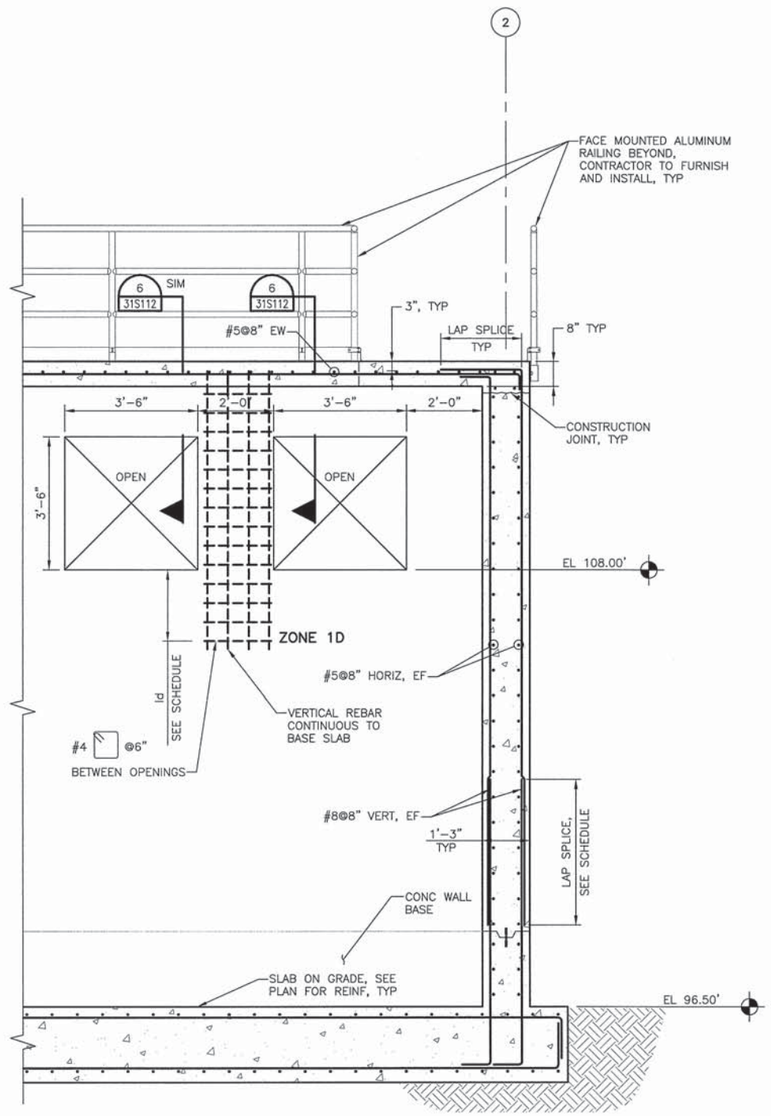

SECTION T 31S104
1/2" = 1'-0"

FILE: 215786-31S110.dwg
DATE: Jun 30, 2015-8:42:38am, jwebb

HDR
HDR Engineering, Inc.

ISSUE	DATE	DESCRIPTION
A	JUNE 2015	ISSUED FOR BID

PROJECT MANAGER	C. OLSON
DESIGNED	M MOSTAFA
DESIGNED	
CHECKED	O. TAVANGAR
DRAWN	D. ELDREDGE
DATE	JUNE 30, 2015
PROJECT NUMBER	215786

REGISTERED PROFESSIONAL ENGINEER MOHAMMADREZA MOSTAFA NO. 78649 EXP. 09/30/15 CIVIL STATE OF CALIFORNIA
06/30/15

CITY OF PINOLE CALIFORNIA 1903

PINOLE/HERCULES
WATER POLLUTION
CONTROL PLANT UPGRADE
CLIENT PN

STRUCTURAL

AERATION BASINS EXPANSION SECTIONS AND DETAILS

0 1" 2"

FILENAME	215786-31S110
SCALE	AS NOTED

SHEET 31S110

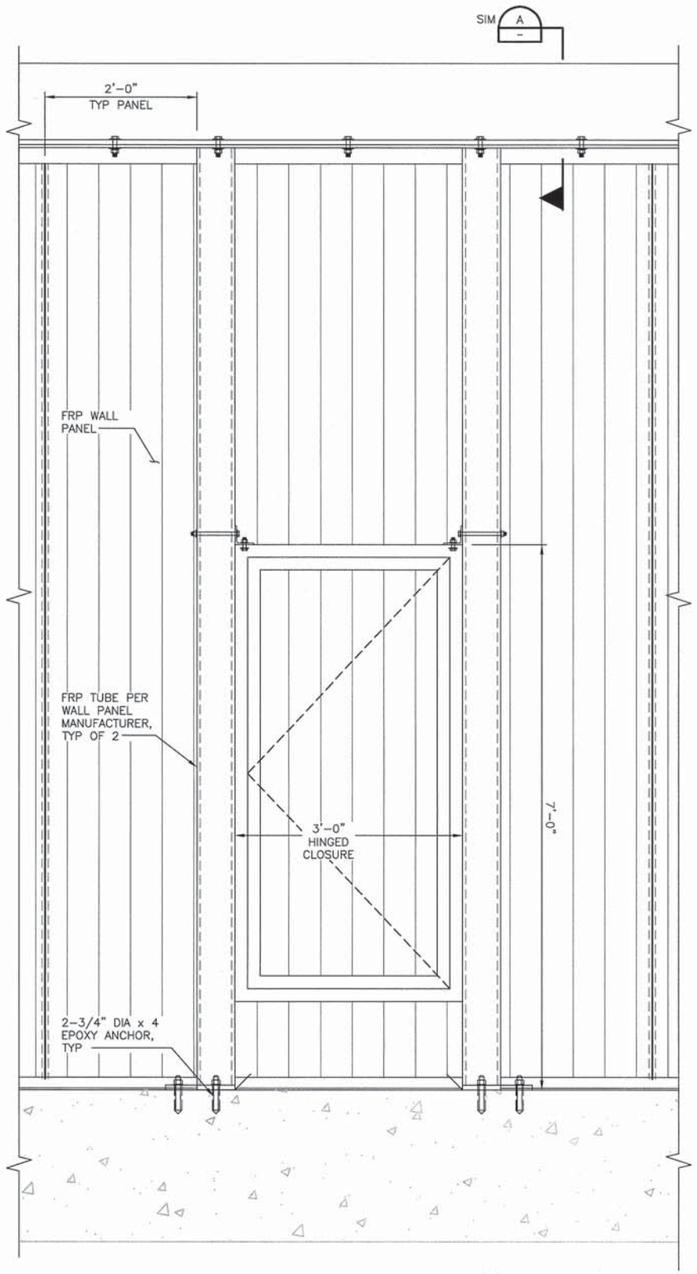

DETAIL 1 31S106
3/4" = 1'-0"

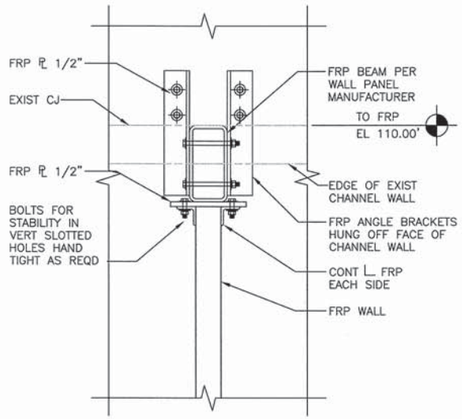

SECTION A
1" = 1'-0"

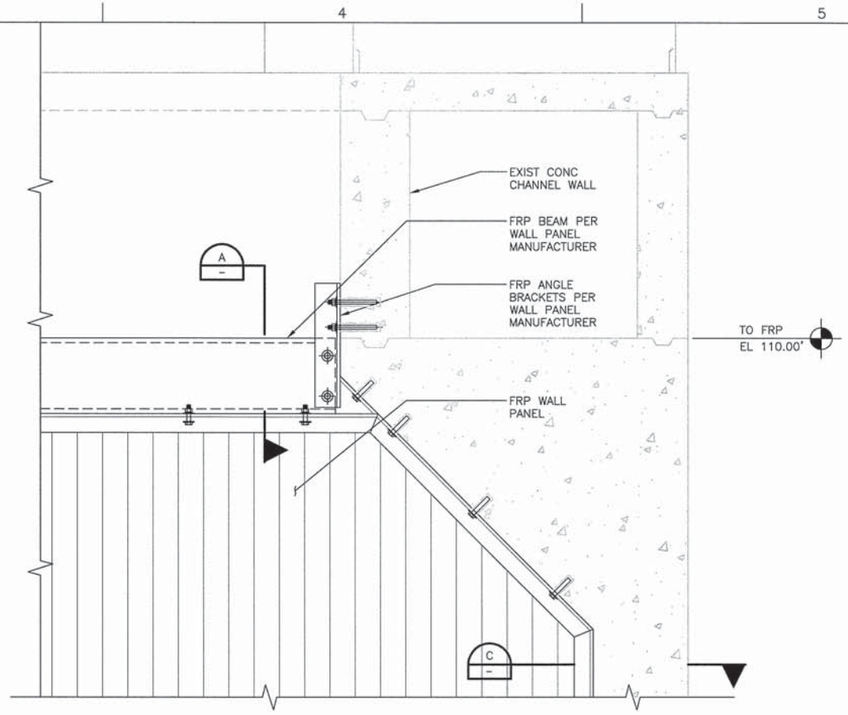

PANEL SUPPORT DETAIL 2 31S106
1" = 1'-0"

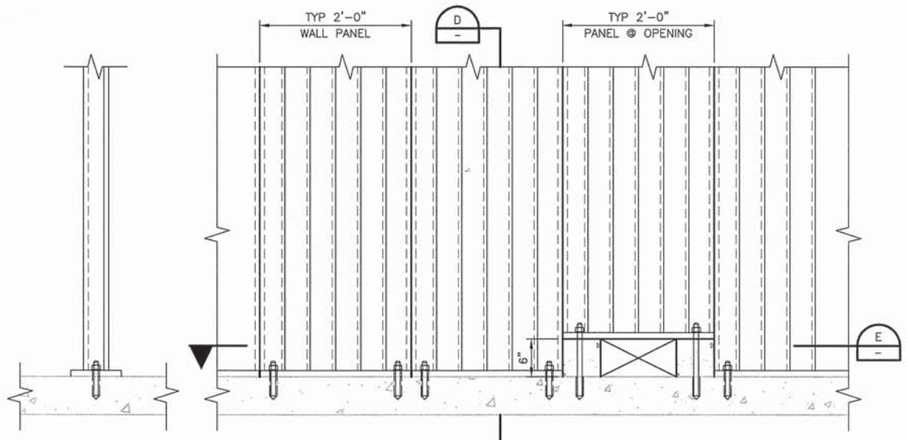

SECTION D
1" = 1'-0"

DETAIL 3 31S106
1" = 1'-0"

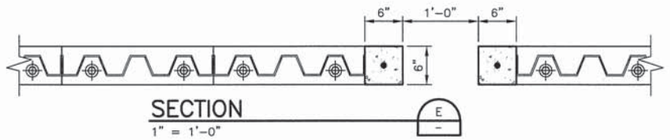

SECTION E
1" = 1'-0"

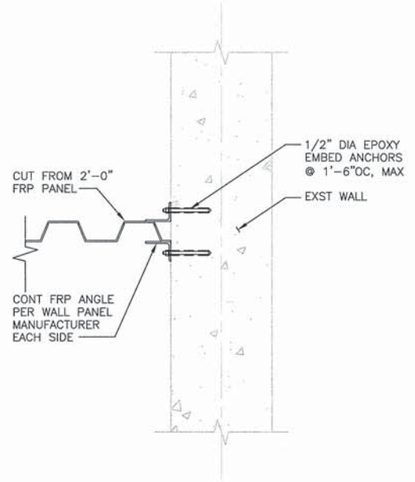

PANEL SUPPORT DETAIL C
1" = 1'-0"

FILE: 215786-31S111.dwg
DATE: Jun 30, 2015 - 8:42:43am jwebb

HDR
HDR Engineering, Inc.

ISSUE	DATE	DESCRIPTION
A	JUNE 2015	ISSUED FOR BID

PROJECT MANAGER	C. OLSON
DESIGNED	M MOSTAFA
DESIGNED	
CHECKED	O. TAVANGAR
DRAWN	D. ELDREDGE
DATE	JUNE 30, 2015
PROJECT NUMBER	215786

REGISTERED PROFESSIONAL ENGINEER
MOHAMMADREZA MOSTAFA
NO. 78649
EXP. 09/30/15
CIVIL
STATE OF CALIFORNIA
06/30/15

CITY OF PINOLE CALIFORNIA 1903

PINOLE/HERCULES
WATER POLLUTION
CONTROL PLANT UPGRADE
CLIENT PN

STRUCTURAL

AERATION BASINS EXPANSION SECTION AND DETAILS

0 1" 2"

FILENAME	215786-31S111
SCALE	AS NOTED

SHEET **31S111**

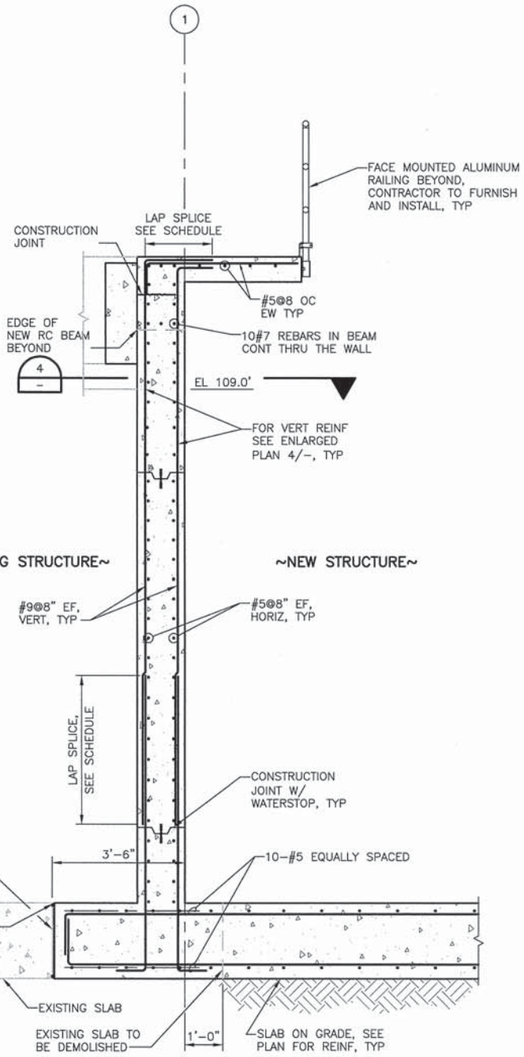

WALL SECTION AT CHANNEL INFILL

SCALE: 1/2"=1'–0"

1 VAR

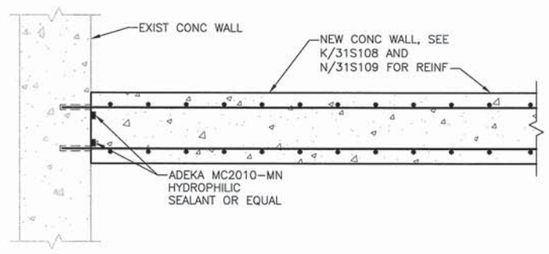

DETAIL – PLAN VIEW

SCALE: 3/4"=1'–0"

2 31S110

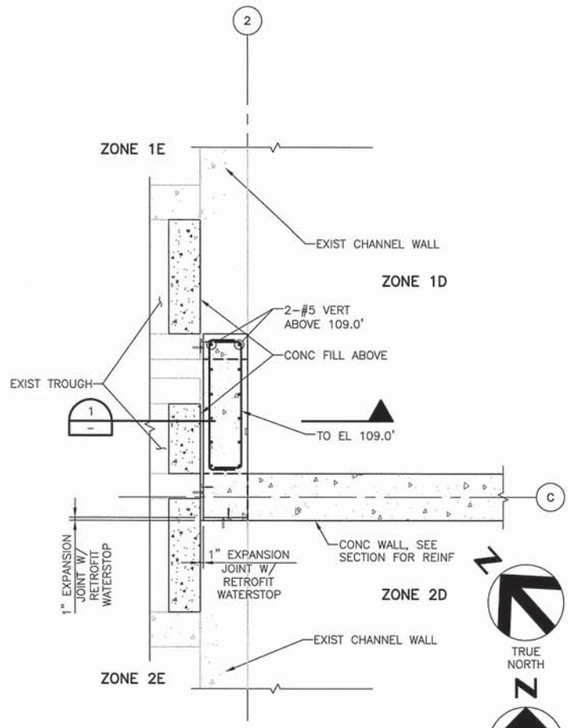

ENLARGED PLAN AT CHANNEL INFILL

SCALE: 1/2"=1'–0"

4 –

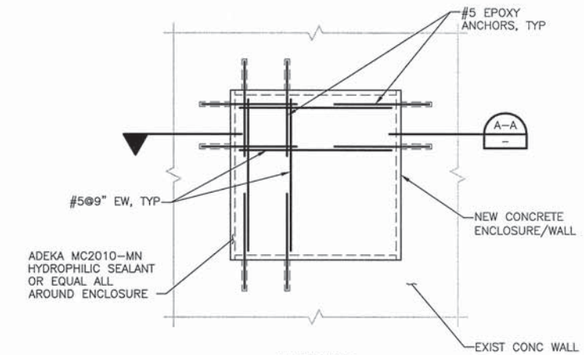

ELEVATION

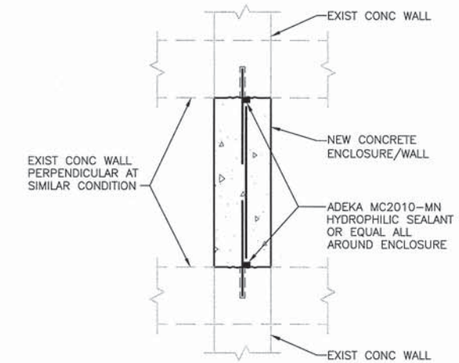

SECTION A–A

CLOSURE DETAIL

SCALE: 3/4"=1'–0"

3 VAR

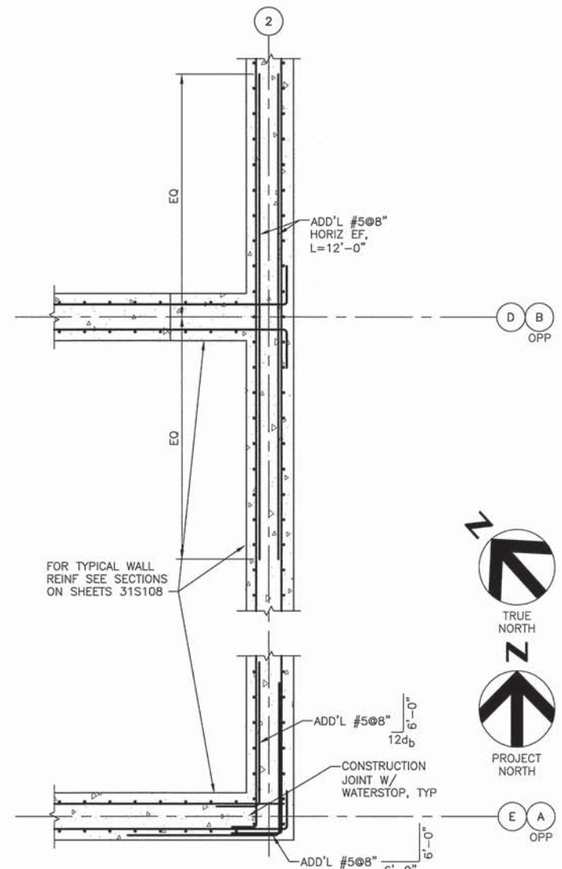

ENLARGED PLAN AT CHANNEL INFILL

SCALE: 1/2"=1'–0"

5 31S102

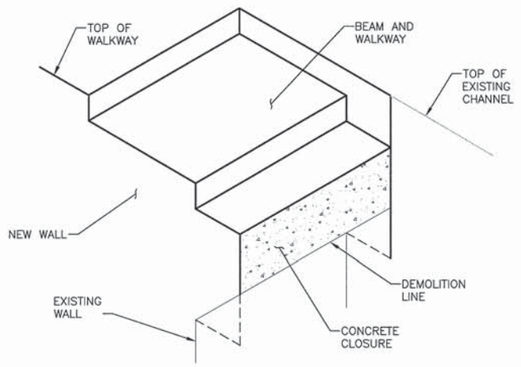

ISOMETRIC VIEW (FROM GROUND ELEVATION)

SCALE: N.T.S.

7 31S103

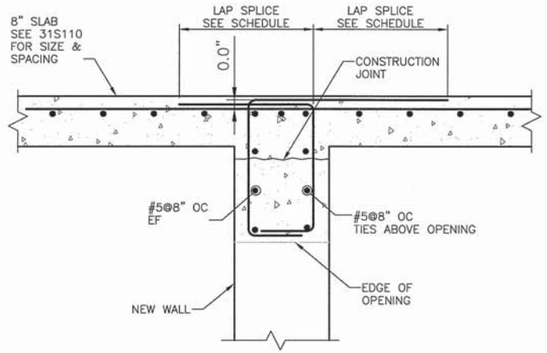

DETAIL ABOVE OPENING

SCALE: 1"=1'–0"

6 31S110

FILE: 215786–31S112.dwg
DATE: Jun 30, 2015–8:42:50am, jwebb

HDR Engineering, Inc.

ISSUE	DATE	DESCRIPTION
A	JUNE 2015	ISSUED FOR BID

PROJECT MANAGER	C. OLSON
DESIGNED	M MOSTAFA
DESIGNED	
CHECKED	C. OLSON
DRAWN	D. ELDREDGE
DATE	JUNE 30, 2015
PROJECT NUMBER	215786

REGISTERED PROFESSIONAL ENGINEER MOHAMMADREZA MOSTAFA NO. 78649 EXP. 09/30/15 CIVIL STATE OF CALIFORNIA 06/30/15

CITY OF PINOLE CALIFORNIA 1903

PINOLE/HERCULES WATER POLLUTION CONTROL PLANT UPGRADE CLIENT PN

STRUCTURAL

AERATION BASINS EXPANSION ENLARGED PLANS, SECTIONS AND DETAILS

0 1" 2"

FILENAME	215786–31S112
SCALE	AS NOTED

SHEET **31S112**

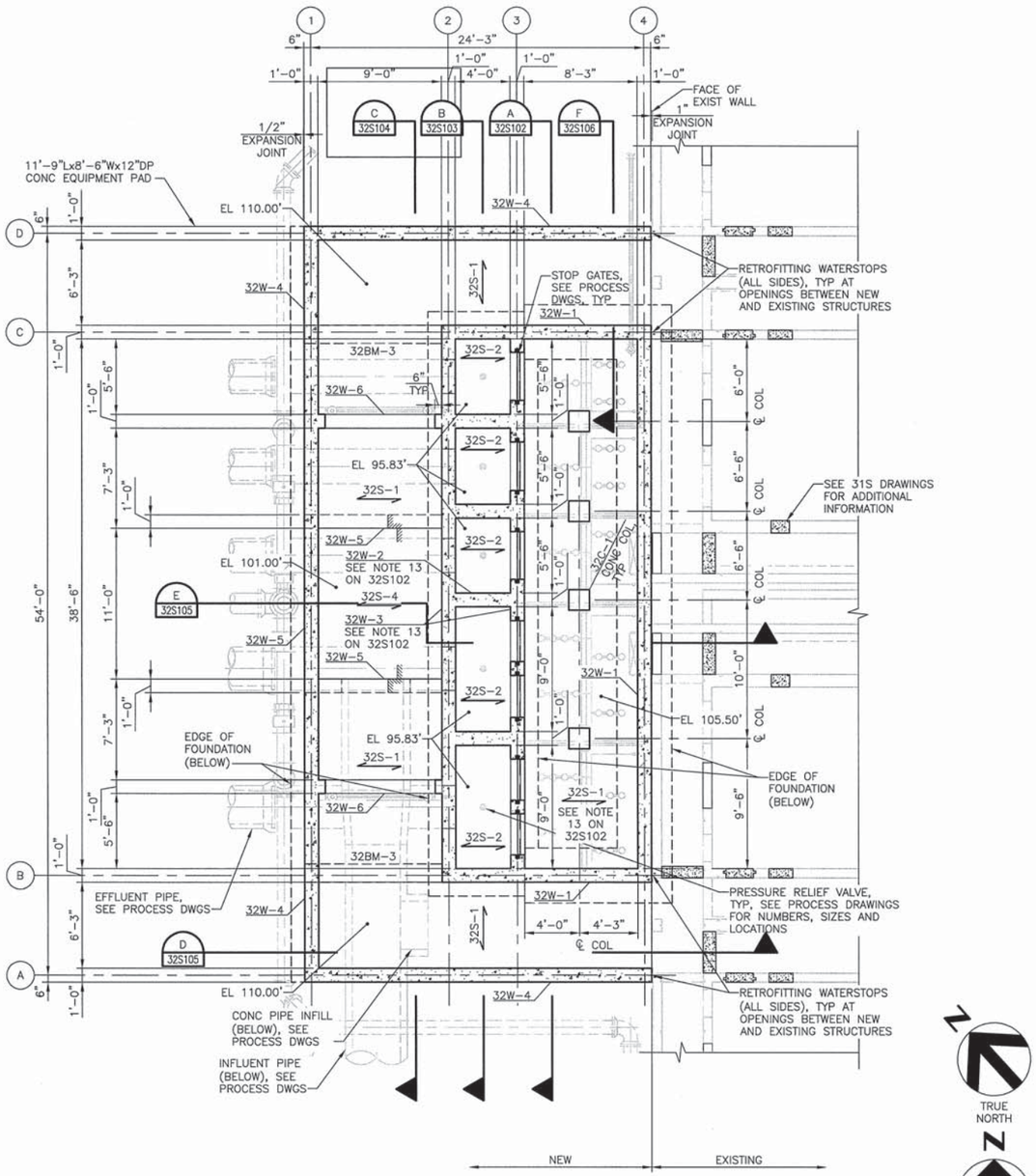

NOTE:
FOR NOTES AND INFORMATION NOT SHOWN, SEE S32S102.

TRUE NORTH

PROJECT NORTH

FOUNDATION PLAN
3/16" = 1'-0"

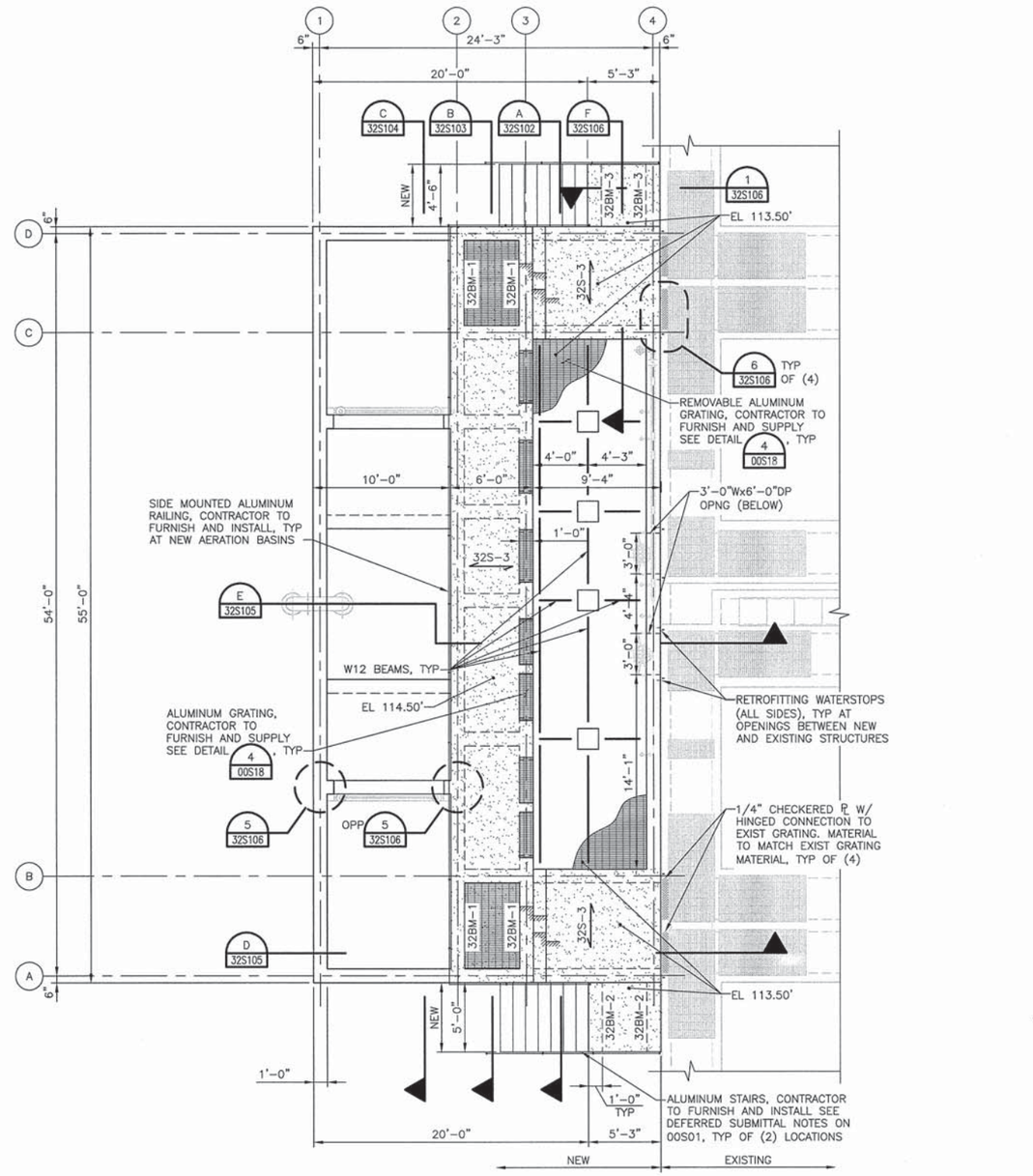

NOTE:
FOR NOTES AND INFORMATION NOT SHOWN, SEE S32S102.

TRUE NORTH

PROJECT NORTH

TOP PLAN
3/16" = 1'-0"

FILE: 215786-32S101.dwg
DATE: Jun 30, 2015 - 8:42:53am, jwebb

HDR Engineering, Inc.

ISSUE	DATE	DESCRIPTION
A	JUNE 2015	ISSUED FOR BID

PROJECT MANAGER	C. OLSON
DESIGNED	M MOSTAFA
DESIGNED	
CHECKED	O. TAVANGAR
DRAWN	D. ELDREDGE
DATE	JUNE 30, 2015
PROJECT NUMBER	215786

REGISTERED PROFESSIONAL ENGINEER MOHAMMADREZA MOSTAFA NO. 78649 EXP. 09/30/15 CIVIL STATE OF CALIFORNIA 06/30/15

CITY OF PINOLE CALIFORNIA 1903

PINOLE/HERCULES
WATER POLLUTION
CONTROL PLANT UPGRADE
CLIENT PN

STRUCTURAL

PRIMARY EFFLUENT AND MIXED LIQUOR FLOW SPLIT BOX PLANS

0 1" 2"

FILENAME	215786-32S101
SCALE	AS NOTED

SHEET **32S101**

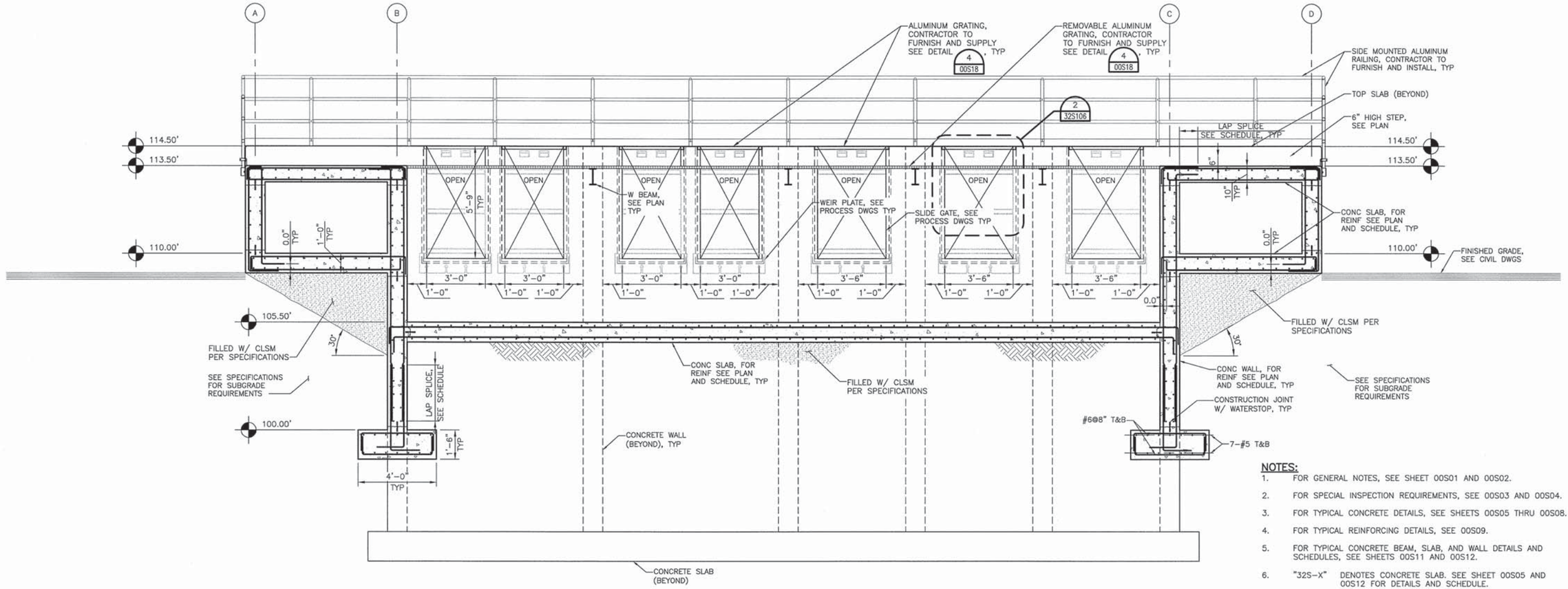

SECTION

SCALE: 3/8"=1'-0"

A 32S101

NOTES:

1. FOR GENERAL NOTES, SEE SHEET 00S01 AND 00S02.
2. FOR SPECIAL INSPECTION REQUIREMENTS, SEE 00S03 AND 00S04.
3. FOR TYPICAL CONCRETE DETAILS, SEE SHEETS 00S05 THRU 00S08.
4. FOR TYPICAL REINFORCING DETAILS, SEE 00S09.
5. FOR TYPICAL CONCRETE BEAM, SLAB, AND WALL DETAILS AND SCHEDULES, SEE SHEETS 00S11 AND 00S12.
6. "32S-X" DENOTES CONCRETE SLAB. SEE SHEET 00S05 AND 00S12 FOR DETAILS AND SCHEDULE.
7. "32W-X" DENOTES CONCRETE WALL. SEE SHEET 00S11 FOR WALL REINFORCING SCHEDULE.
8. ALL COLUMNS, WALLS, PILES, AND PILECAPS ARE CENTERED ON GRID LINES, UNLESS NOTED OTHERWISE.
9. CONTRACTOR TO VERIFY SIZES AND LOCATIONS OF ALL OPENINGS WITH PROCESS DRAWINGS. ALL DIMENSIONS ARE FOR ROUGH OPENINGS.
10. FOR ALL SLIDE AND STOP GATE LOCATIONS SEE PROCESS DRAWINGS. CONTRACTOR TO COORDINATE GATE GUIDE DETAILS, SIZE AND ANCHORAGE WITH MANUFACTURER.
11. FOR WEIR PLATE LOCATIONS AND DETAILS SEE PROCESS DRAWINGS.
12. FOR PIPE SIZES, ORIENTATION AND LOCATIONS SEE PROCESS DRAWINGS.
13. WALLS ALONG GRIDS 2, 3 AND WALL TYPE "32W-2" SHALL BE POURED AND SET PRIOR TO BACKFILLING AND POURING SLAB "32S-1".
14. "32C-X" DENOTES CONCRETE COLUMN. SEE SHEET 00S08 FOR COLUMN REINFORCING SCHEDULE.
15. FOR PRV NUMBERS, SIZES AND LOCATIONS, SEE PROCESS DRAWINGS.

FILE: 215786-32S102.dwg
DATE: Jun 30, 2015-8:42:59am, jwebb

HDR Engineering, Inc.

ISSUE	DATE	DESCRIPTION
A	JUNE 2015	ISSUED FOR BID

PROJECT MANAGER	C. OLSON
DESIGNED	M. MOSTAFA
DESIGNED	
CHECKED	C. OLSON
DRAWN	D. ELDREDGE
DATE	JUNE 30, 2015
PROJECT NUMBER	215786

REGISTERED PROFESSIONAL ENGINEER MOHAMMADREZA MOSTAFA NO. 78649 EXP. 09/30/15 CIVIL STATE OF CALIFORNIA 06/30/15

CITY OF PINOLE CALIFORNIA 1903

PINOLE/HERCULES WATER POLLUTION CONTROL PLANT UPGRADE CLIENT PN

STRUCTURAL

PRIMARY EFFLUENT AND MIXED LIQUOR FLOW SPLIT BOX SECTIONS - I

0 1" 2"

FILENAME	215786-32S102
SCALE	AS NOTED

SHEET 32S102

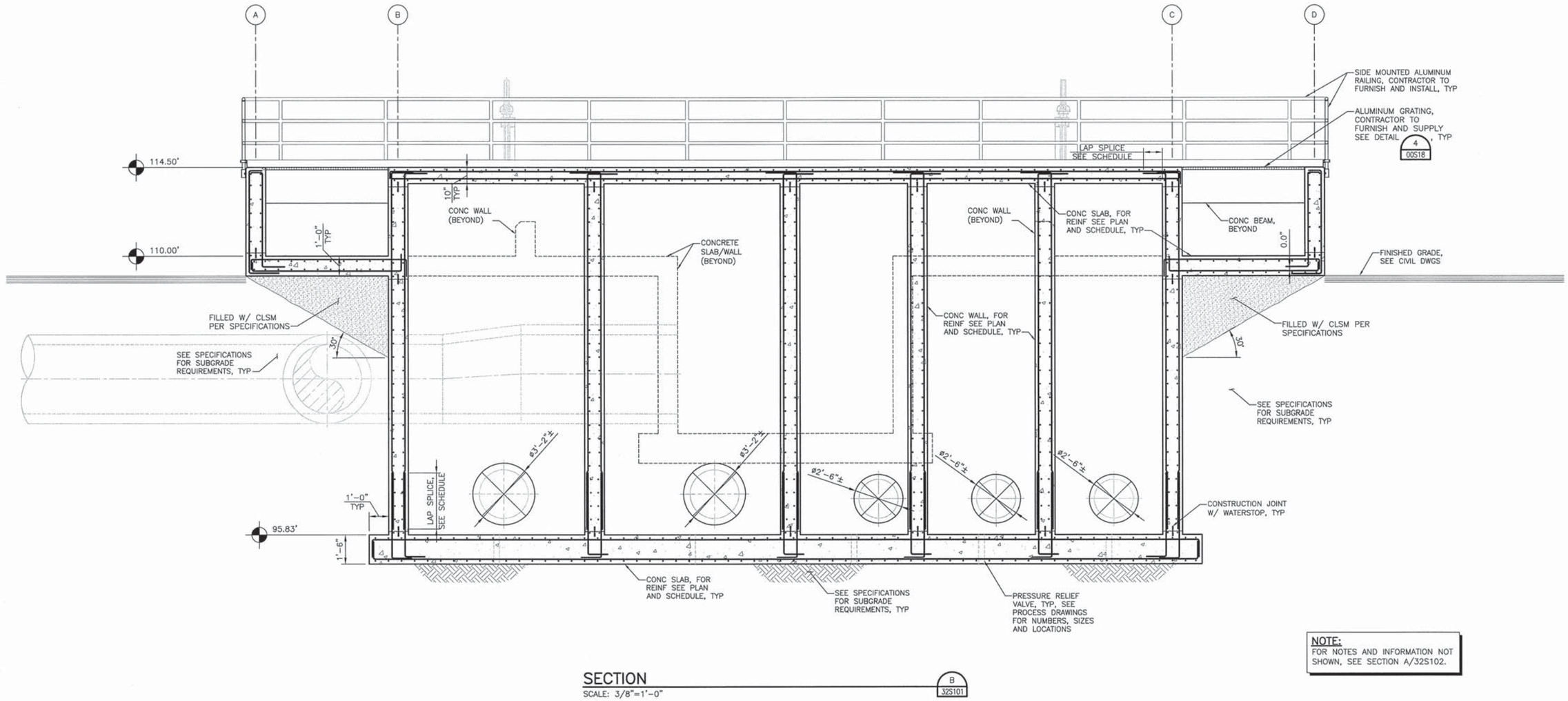

SECTION

SCALE: 3/8"=1'-0"

B / 32S101

NOTE:
FOR NOTES AND INFORMATION NOT SHOWN, SEE SECTION A/32S102.

FILE: 215786-32S103.dwg
DATE: Jun 30, 2015-8:43:09am jwebb

HDR Engineering, Inc.

ISSUE	DATE	DESCRIPTION
A	JUNE 2015	ISSUED FOR BID

PROJECT MANAGER	C. OLSON
DESIGNED	M. MOSTAFA
DESIGNED	
CHECKED	C. OLSON
DRAWN	D. ELDREDGE
DATE	JUNE 30, 2015
PROJECT NUMBER	215786

REGISTERED PROFESSIONAL ENGINEER MOHAMMADREZA MOSTAFA NO. 78649 EXP. 09/30/15 CIVIL STATE OF CALIFORNIA 06/30/15

CITY OF PINOLE CALIFORNIA 1903

PINOLE/HERCULES
WATER POLLUTION
CONTROL PLANT UPGRADE
CLIENT PN

STRUCTURAL

PRIMARY EFFLUENT AND MIXED LIQUOR FLOW SPLIT BOX SECTIONS - II

0 1" 2"

FILENAME	215786-32S103
SCALE	AS NOTED

SHEET **32S103**

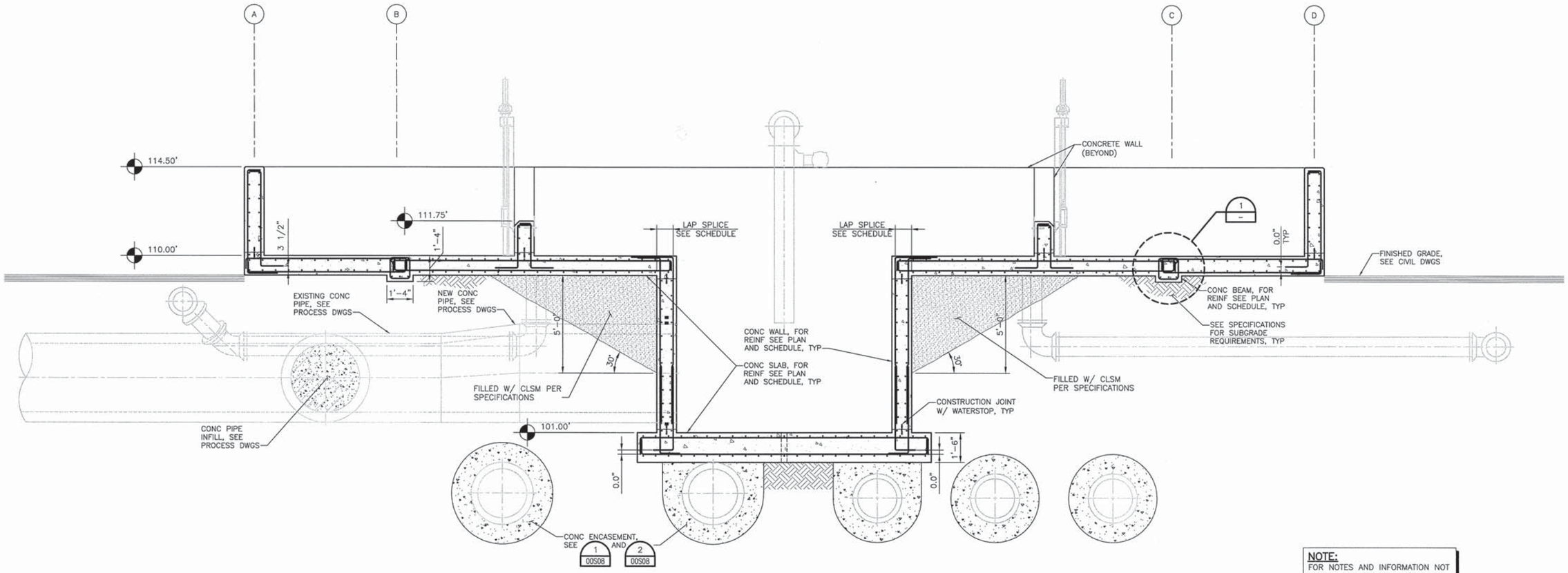

SECTION

SCALE: 3/8"=1'-0"

C / 32S101

NOTE:
FOR NOTES AND INFORMATION NOT SHOWN, SEE SECTION A/32S102.

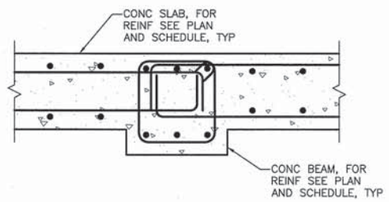

DETAIL

SCALE: 3/8"=1'-0"

1 / –

FILE: 215786-32S104.dwg
DATE: Jun 30, 2015-8:43:16am, jwebb

HDR Engineering, Inc.

ISSUE	DATE	DESCRIPTION
A	JUNE 2015	ISSUED FOR BID

PROJECT MANAGER	C. OLSON
DESIGNED	M. MOSTAFA
DESIGNED	
CHECKED	C. OLSON
DRAWN	D. ELDREDGE
DATE	JUNE 30, 2015
PROJECT NUMBER	215786

REGISTERED PROFESSIONAL ENGINEER
MOHAMMADREZA MOSTAFA
NO. 78649
EXP. 09/30/15
CIVIL
STATE OF CALIFORNIA
06/30/15

CITY OF PINOLE CALIFORNIA 1903

PINOLE/HERCULES
WATER POLLUTION
CONTROL PLANT UPGRADE
CLIENT PN

STRUCTURAL

PRIMARY EFFLUENT AND MIXED LIQUOR FLOW SPLIT BOX SECTIONS - III

0 1" 2"

FILENAME	215786-32S104
SCALE	AS NOTED

SHEET **32S104**

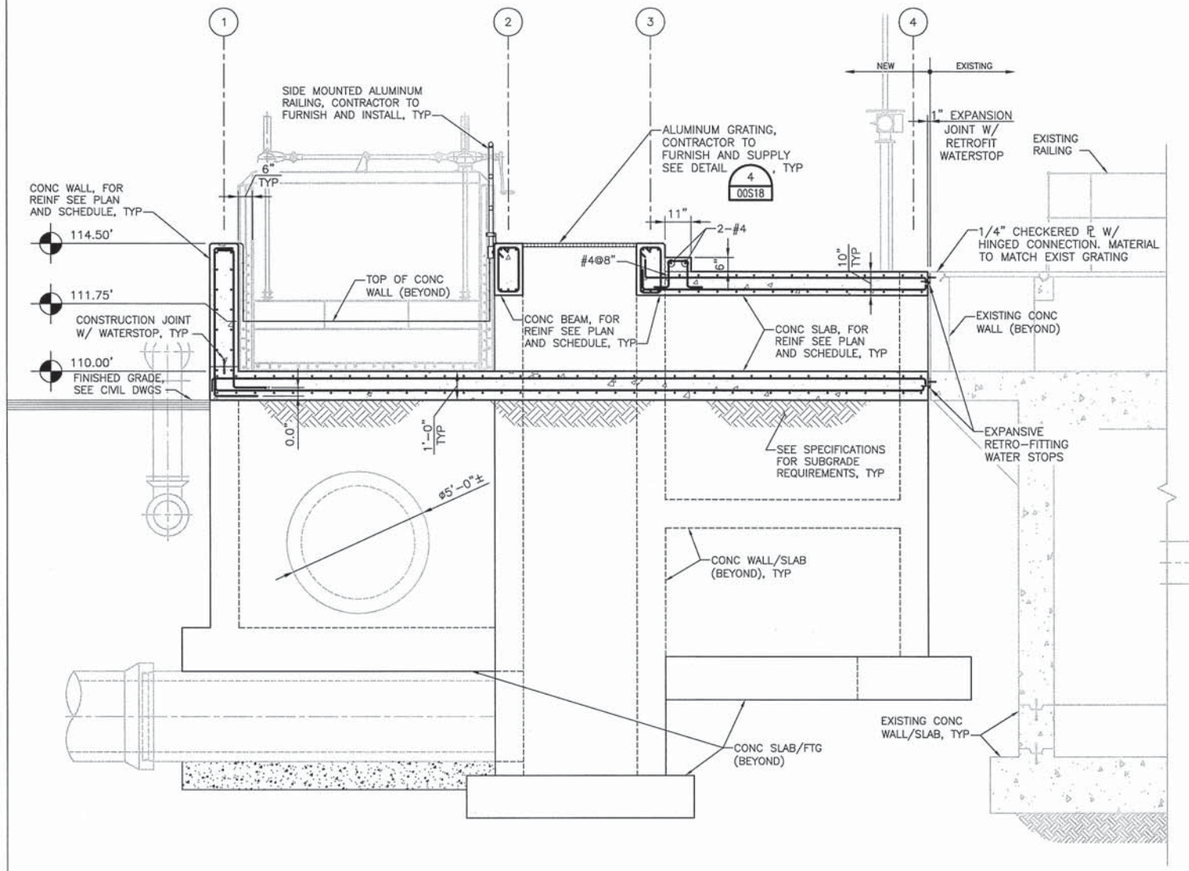

NOTE:
FOR NOTES AND INFORMATION NOT SHOWN, SEE SECTION A/32S102.

SECTION
SCALE: 3/8"=1'-0"

D / 32S101

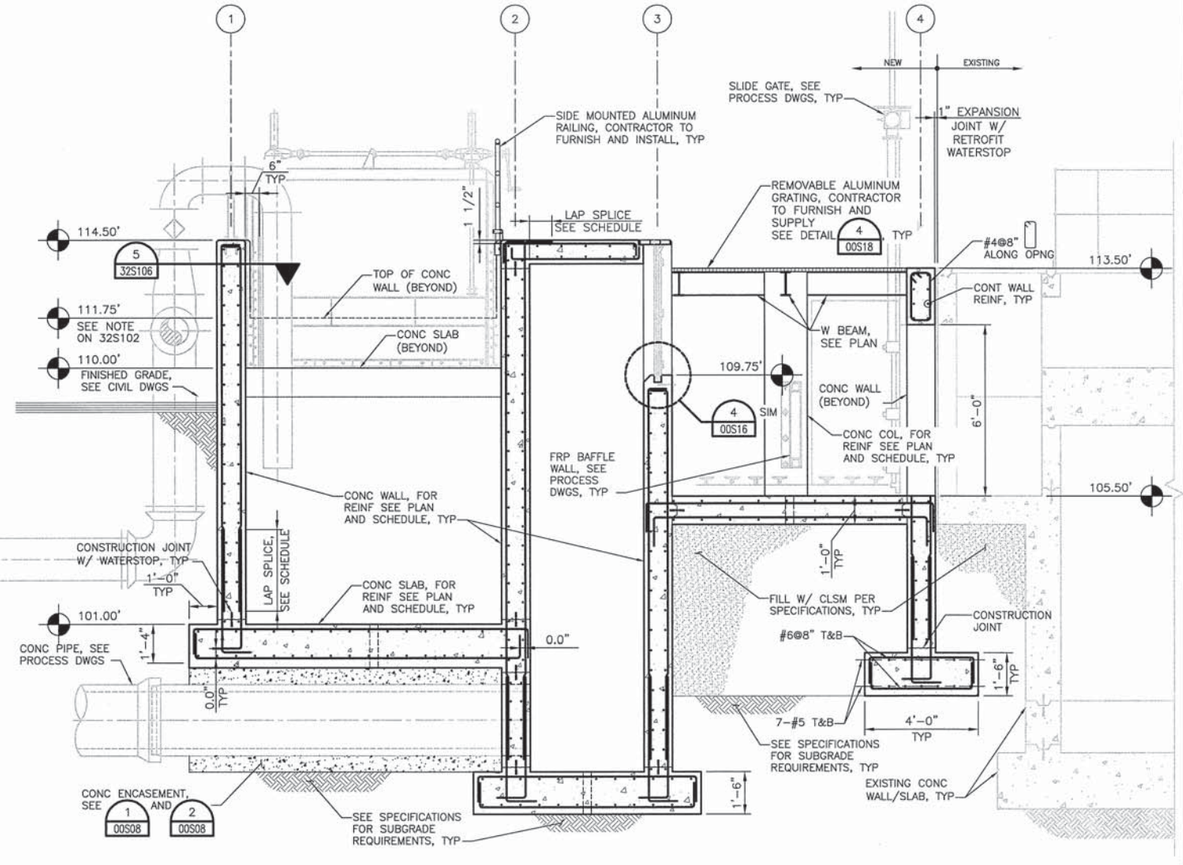

NOTE:
FOR NOTES AND INFORMATION NOT SHOWN, SEE SECTION A/32S102.

SECTION
SCALE: 3/8"=1'-0"

E / 32S101

FILE: 215786-32S105.dwg
DATE: Jun 30, 2015 - 8:43:25am, jwebb

HDR Engineering, Inc.

ISSUE	DATE	DESCRIPTION
A	JUNE 2015	ISSUED FOR BID

PROJECT MANAGER	C. OLSON
DESIGNED	M. MOSTAFA
DESIGNED	
CHECKED	C. OLSON
DRAWN	D. ELDREDGE
DATE	JUNE 30, 2015
PROJECT NUMBER	215786

REGISTERED PROFESSIONAL ENGINEER MOHAMMADREZA MOSTAFA NO. 78649 EXP. 09/30/15 CIVIL STATE OF CALIFORNIA
6/30/15

CITY OF PINOLE CALIFORNIA 1903

PINOLE/HERCULES
WATER POLLUTION
CONTROL PLANT UPGRADE
CLIENT PN

STRUCTURAL

PRIMARY EFFLUENT AND MIXED LIQUOR FLOW SPLIT BOX SECTIONS - IV

0 1" 2"

FILENAME	215786-32S105
SCALE	AS NOTED

SHEET 32S105

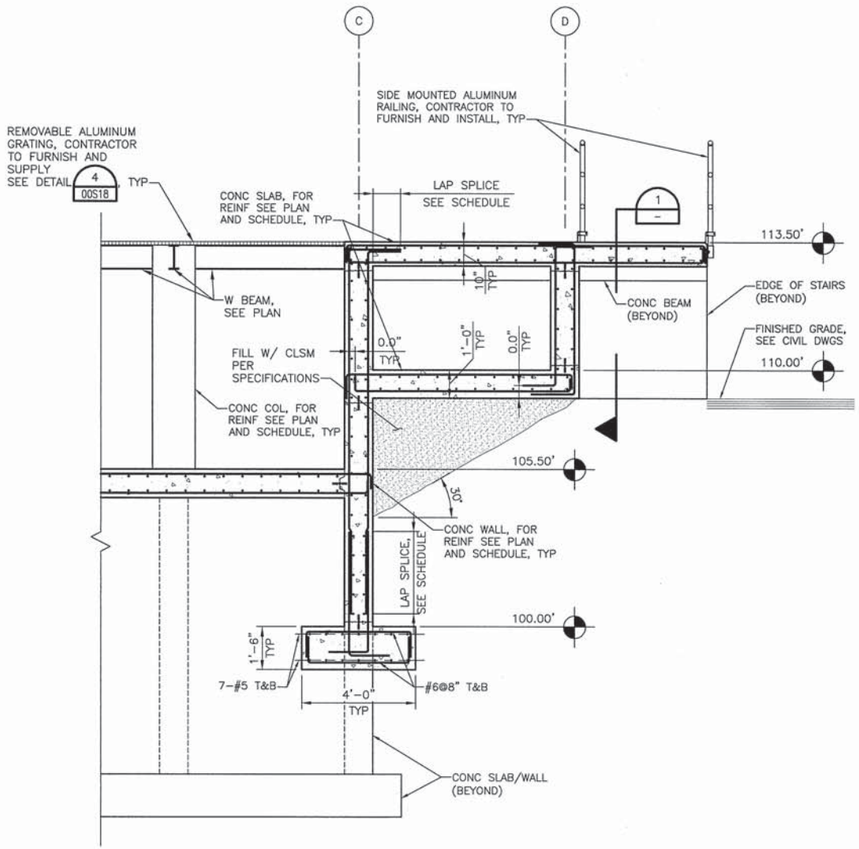

SECTION
SCALE: 3/8"=1'-0"
F 32S101

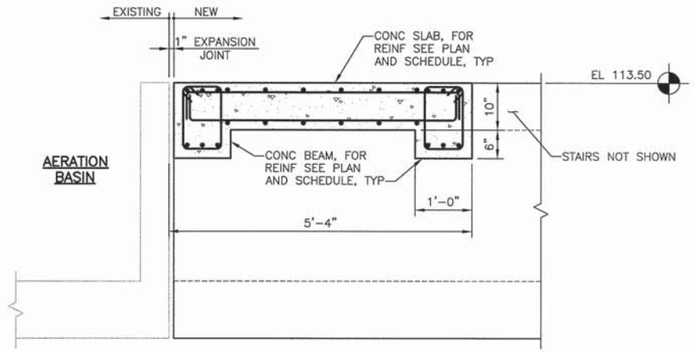

SECTION
SCALE: 3/4"=1'-0"
1 32S101

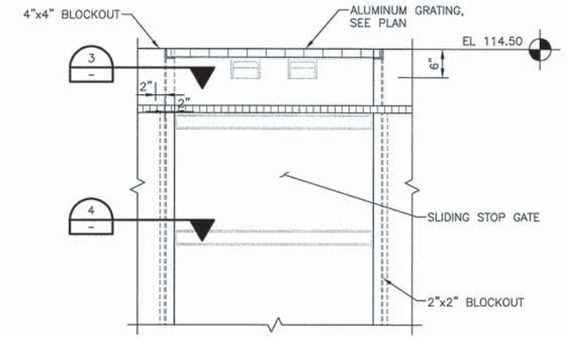

SECTION
SCALE: 3/4"=1'-0"
2 32S102

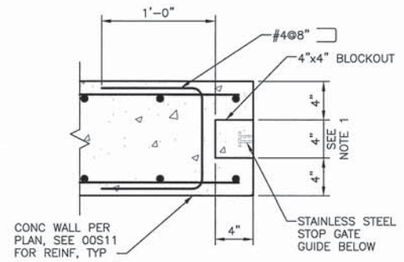

DETAIL
SCALE: 1 1/2"=1'-0"
3 –

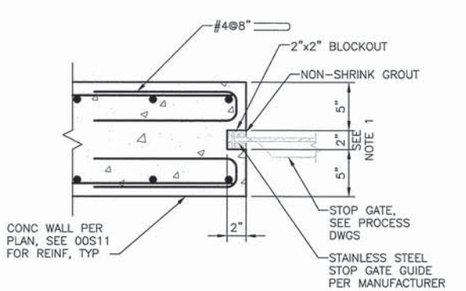

DETAIL
SCALE: 1 1/2"=1'-0"
4 –

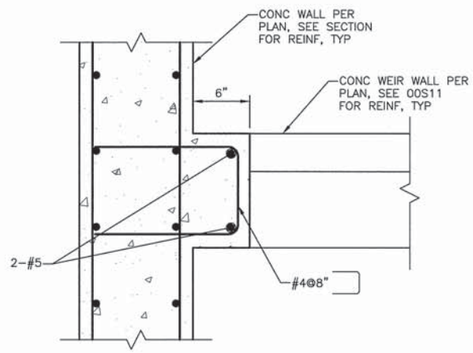

DETAIL – PLAN VIEW
SCALE: 1 1/2"=1'-0"
5 32S101

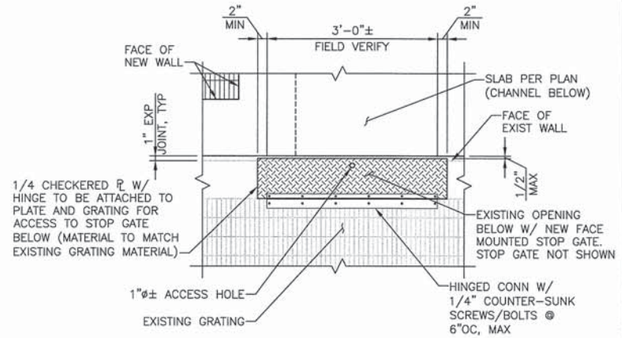

DETAIL – PLAN VIEW
SCALE: 3/4"=1'-0"
6 32S101

NOTES:
1. CONTRACTOR TO VERIFY SIZE AND LOCATIONS OF BLOCK OUTS WITH SLIDE GATE MANUFACTURER.
2. SEE NOTES ON 32S102 FOR INFORMATION NOTE SHOWN.

NOTE:
CONTRACTOR TO FURNISH AND INSTALL CHECKERED PLATE AND HINGE SYSTEM TO PROVIDE MEANS OF ATTACHMENT FROM EXISTING GRATING TO NEW CHECKERED PLATING.

FILE: 215786-32S106.dwg
DATE: Jun 30, 2015-8:43:35am, jwebb

HDR
HDR Engineering, Inc.

ISSUE	DATE	DESCRIPTION
A	JUNE 2015	ISSUED FOR BID

PROJECT MANAGER	C. OLSON
DESIGNED	M. MOSTAFA
DESIGNED	
CHECKED	C. OLSON
DRAWN	D. ELDREDGE
DATE	JUNE 30, 2015
PROJECT NUMBER	215786

REGISTERED PROFESSIONAL ENGINEER
MOHAMMADREZA MOSTAFA
No. 78649
EXP. 09/30/15
CIVIL
STATE OF CALIFORNIA
06/30/15

CITY OF PINOLE CALIFORNIA 1903

PINOLE/HERCULES
WATER POLLUTION
CONTROL PLANT UPGRADE
CLIENT PN

STRUCTURAL

PRIMARY EFFLUENT AND MIXED LIQUOR FLOW SPLIT BOX SECTIONS AND DETAILS

0 1" 2"

FILENAME	215786-32S106
SCALE	AS NOTED

SHEET
32S106

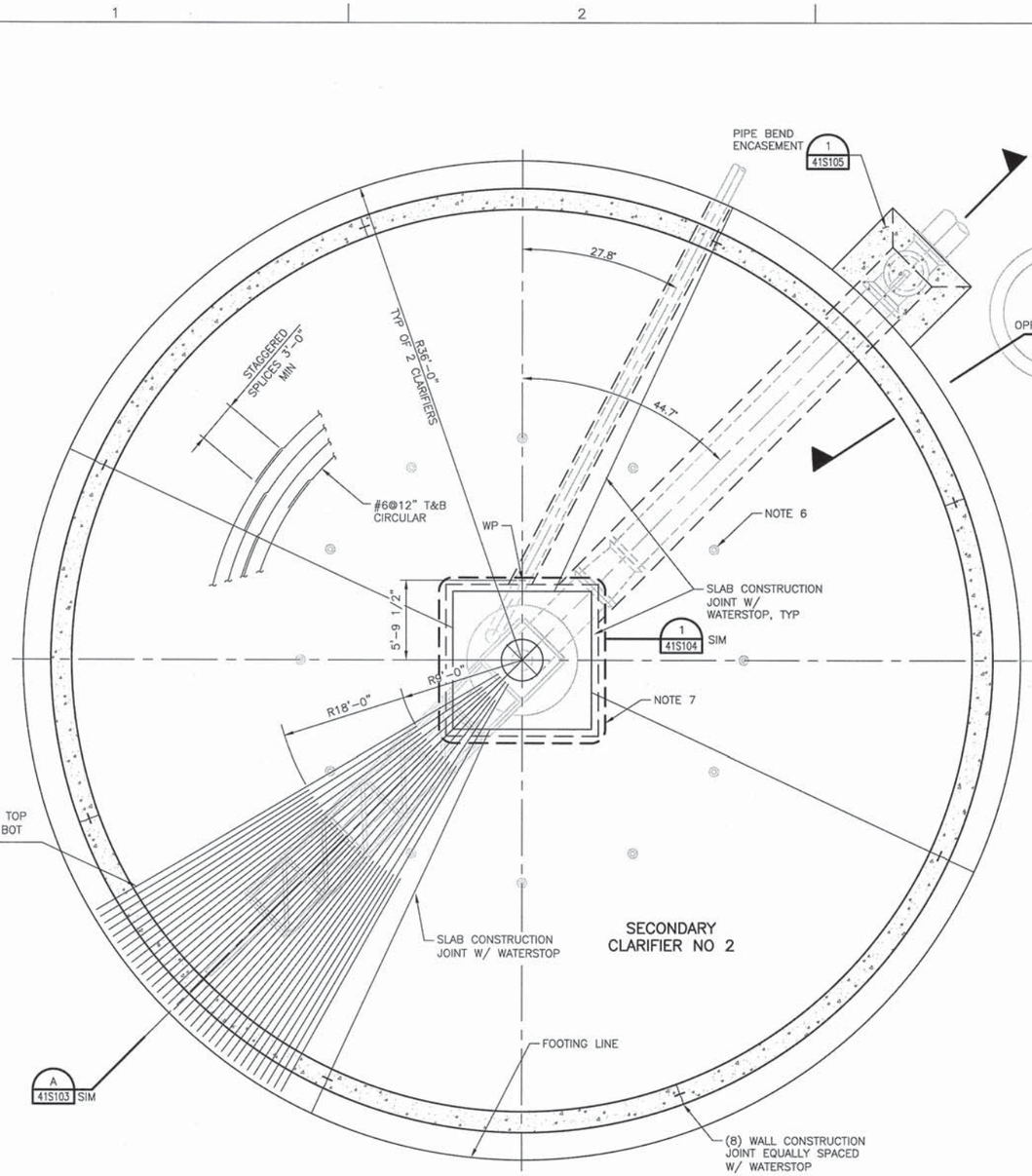

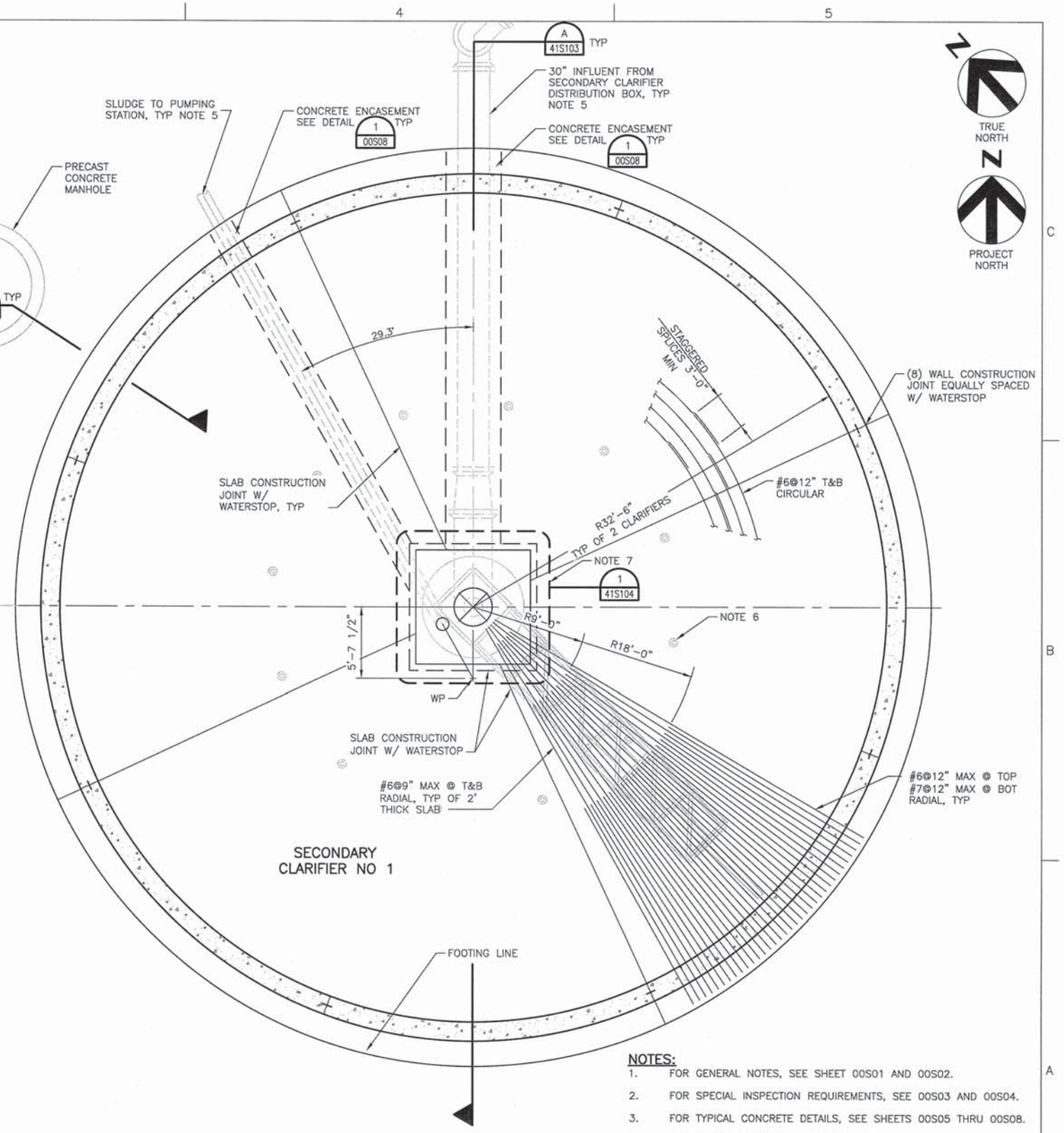

SECONDARY CLARIFIERS–FOUNDATION PLAN

SCALE: 3/16" = 1'–0"

NOTES:

1. FOR GENERAL NOTES, SEE SHEET 00S01 AND 00S02.
2. FOR SPECIAL INSPECTION REQUIREMENTS, SEE 00S03 AND 00S04.
3. FOR TYPICAL CONCRETE DETAILS, SEE SHEETS 00S05 THRU 00S08.
4. FOR TYPICAL REINFORCING DETAILS, SEE 00S09.
5. COORDINATE PIPING LOCATION, ORIENTATION, ELEVATIONS, AND CONCRETE PENETRATIONS WITH PROCESS/MECHANICAL DRAWINGS.
6. REFER TO PROCESS DRAWINGS FOR LOCATIONS AND NUMBER OF PRESSURE RELIEF VALVES.
7. PEDESTAL SIZE AND REINFORCEMENT ARE BASED ON MECHANISM INFORMATION AT PRE–DESIGN STAGE. CONSTRUCTOR SHALL PROVIDE ALL DESIGN LOADS AT PEDESTAL BASE FOR ENGINEER OF RECORD TO VERIFY PEDESTAL DESIGN BEFORE CONSTRUCTION.

FILE: 215786–41S101.dwg
DATE: Jun 29, 2015–8:15:45pm, zhli

HDR Engineering, Inc.

ISSUE	DATE	DESCRIPTION
A	JUNE 2015	ISSUED FOR BID

PROJECT MANAGER	C. OLSON
DESIGNED	Z. LI
DESIGNED	
CHECKED	O. TAVANGAR
DRAWN	D. ELDREDGE
DATE	JUNE 30, 2015
PROJECT NUMBER	215786

REGISTERED PROFESSIONAL ENGINEER
ZHEN LI
NO. 74809
EXP. 12/31/15
6/30/2015
CIVIL
STATE OF CALIFORNIA

CITY OF PINOLE CALIFORNIA 1903

PINOLE/HERCULES
WATER POLLUTION
CONTROL PLANT UPGRADE
CLIENT PN

STRUCTURAL

SECONDARY CLARIFIERS NO 1 AND NO 2 FOUNDATION PLAN

0 1" 2"

FILENAME	215786–41S101
SCALE	AS NOTED

SHEET **41S101**

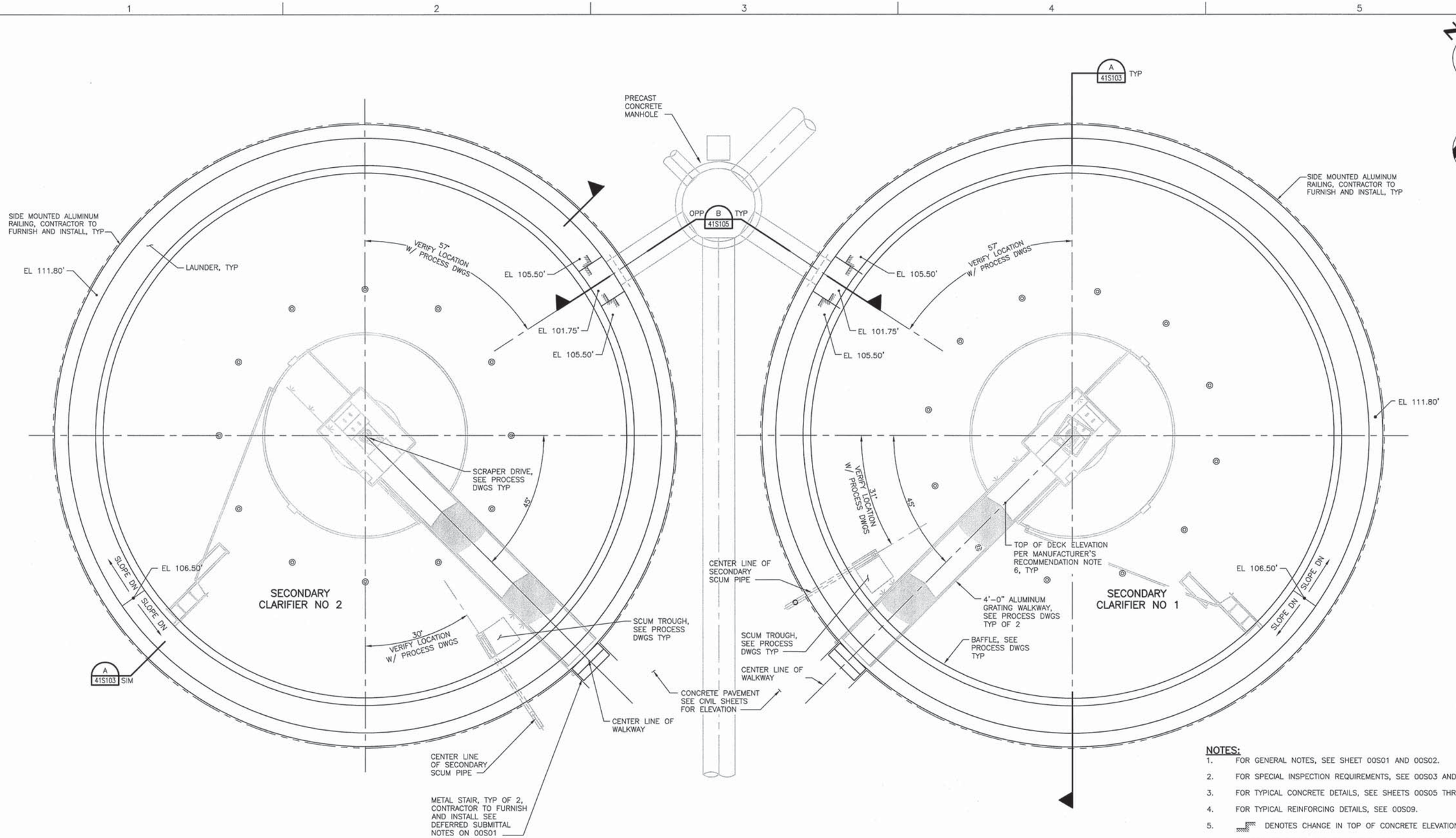

SECONDARY CLARIFIERS–TOP PLAN

SCALE: 3/16" = 1'-0"

NOTES:

1. FOR GENERAL NOTES, SEE SHEET 00S01 AND 00S02.
2. FOR SPECIAL INSPECTION REQUIREMENTS, SEE 00S03 AND 00S04.
3. FOR TYPICAL CONCRETE DETAILS, SEE SHEETS 00S05 THRU 00S08.
4. FOR TYPICAL REINFORCING DETAILS, SEE 00S09.
5. DENOTES CHANGE IN TOP OF CONCRETE ELEVATION.
6. COORDINATE PIPING AND EQUIPMENT LOCATIONS, ORIENTATION, ELEVATIONS, AND CONCRETE PENETRATIONS WITH PROCESS/MECHANICAL DRAWINGS.
7. FOR TYPICAL RAILING DETAILS, SEE SHEET 00S19 THRU 00S20.

FILE: 215786–41S102.dwg
DATE: Jun 29, 2015–3:43:25pm, jwebb

HDR Engineering, Inc.

ISSUE	DATE	DESCRIPTION
A	JUNE 2015	ISSUED FOR BID

PROJECT MANAGER	C. OLSON
DESIGNED	Z. LI
DESIGNED	
CHECKED	O. TAVANGAR
DRAWN	D. ELDREDGE
DATE	JUNE 30, 2015
PROJECT NUMBER	215786

REGISTERED PROFESSIONAL ENGINEER — ZHEN LI — NO. 74809 EXP. 12/31/15 — 6/30/2015 — CIVIL — STATE OF CALIFORNIA

CITY OF PINOLE CALIFORNIA 1903

PINOLE/HERCULES WATER POLLUTION CONTROL PLANT UPGRADE CLIENT PN

STRUCTURAL

SECONDARY CLARIFIERS NO 1 AND NO 2 TOP PLAN

0 1" 2"

FILENAME	215786–41S102
SCALE	AS NOTED

SHEET **41S102**

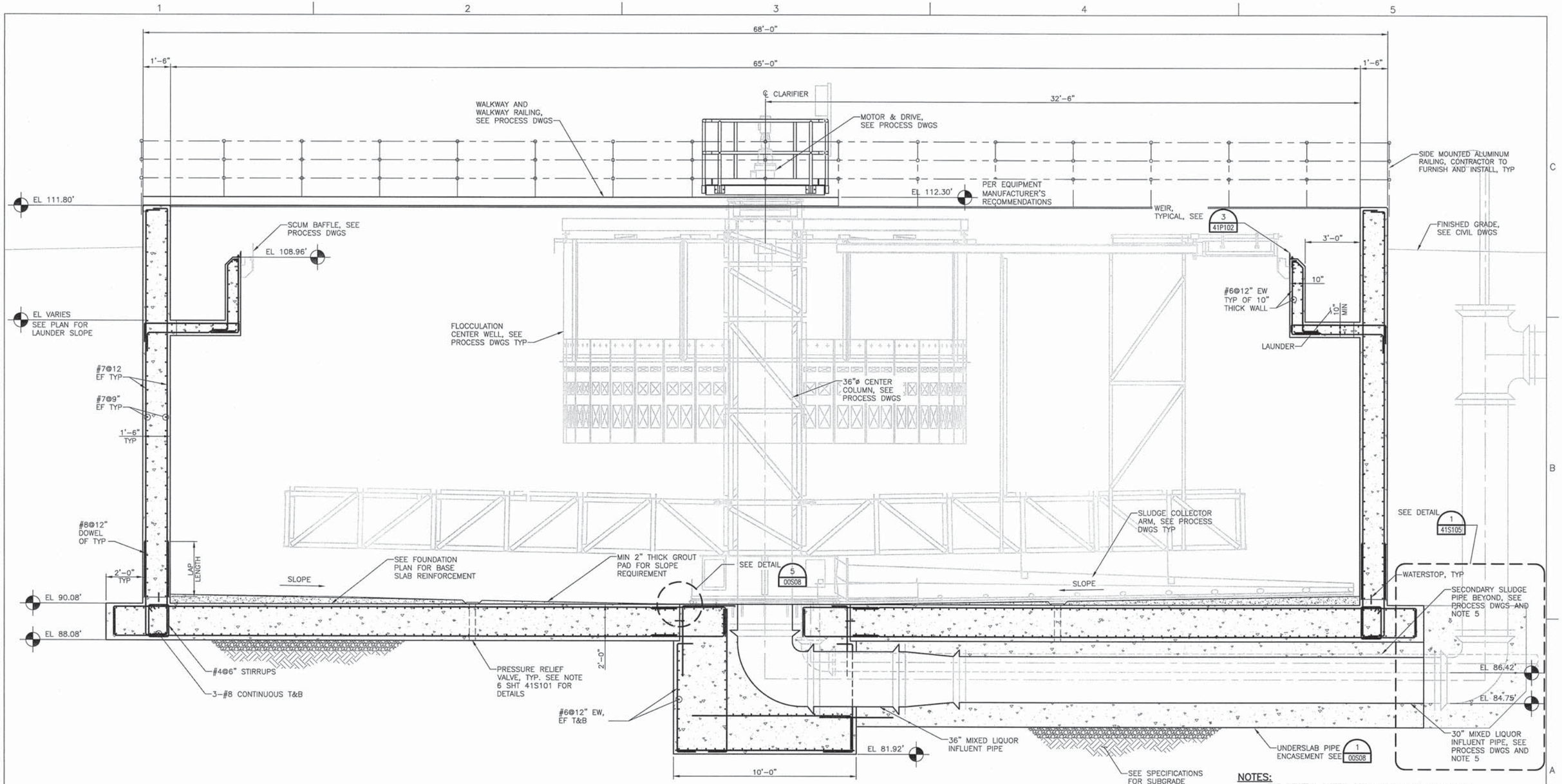

SECTION

SCALE: 3/8"=1'-0"

A 41S101 41S102

NOTES:

1. FOR GENERAL NOTES, SEE SHEET 00S01 AND 00S02.
2. FOR SPECIAL INSPECTION REQUIREMENTS, SEE 00S03 AND 00S04.
3. FOR TYPICAL CONCRETE DETAILS, SEE SHEETS 00S05 THRU 00S08.
4. FOR TYPICAL REINFORCING DETAILS, SEE 00S09.
5. COORDINATE PIPING AND EQUIPMENT LOCATIONS, ORIENTATION, ELEVATIONS, AND CONCRETE PENETRATIONS WITH PROCESS/MECHANICAL DRAWINGS.
6. FOR TYPICAL RAILING DETAILS, SEE SHEET 00S19 THRU 00S20.

FILE: 215786-41S103.dwg
DATE: Jun 29, 2015-4:17:17pm, zhli

HDR Engineering, Inc.

ISSUE	DATE	DESCRIPTION
A	JUNE 2015	ISSUED FOR BID

PROJECT MANAGER	C. OLSON
DESIGNED	Z. LI
DESIGNED	
CHECKED	O. TAVANGAR
DRAWN	D. ELDREDGE
DATE	JUNE 30, 2015
PROJECT NUMBER	215786

REGISTERED PROFESSIONAL ENGINEER
ZHEN LI
NO. 74809
EXP. 12/31/15
6/30/2015
CIVIL
STATE OF CALIFORNIA

CITY OF PINOLE CALIFORNIA 1903

PINOLE/HERCULES
WATER POLLUTION
CONTROL PLANT UPGRADE
CLIENT PN

STRUCTURAL

SECONDARY CLARIFIERS NO 1 AND NO 2
SECTION

0 1" 2"

FILENAME	215786-41S103
SCALE	AS NOTED

SHEET **41S103**

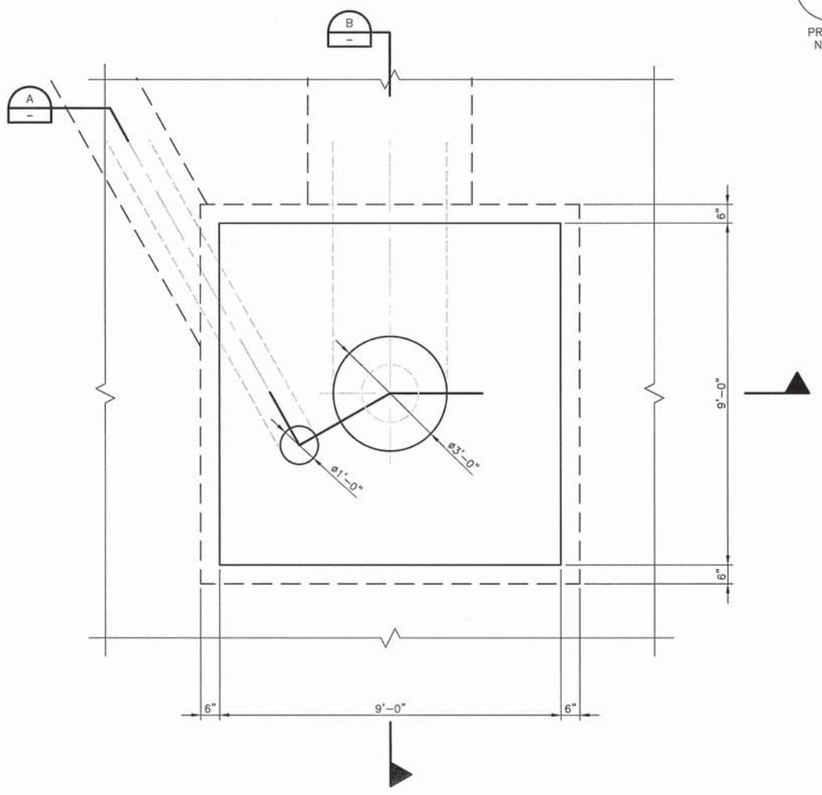

ENLARGED PLAN
1/2" = 1'-0"
1 / 41S101



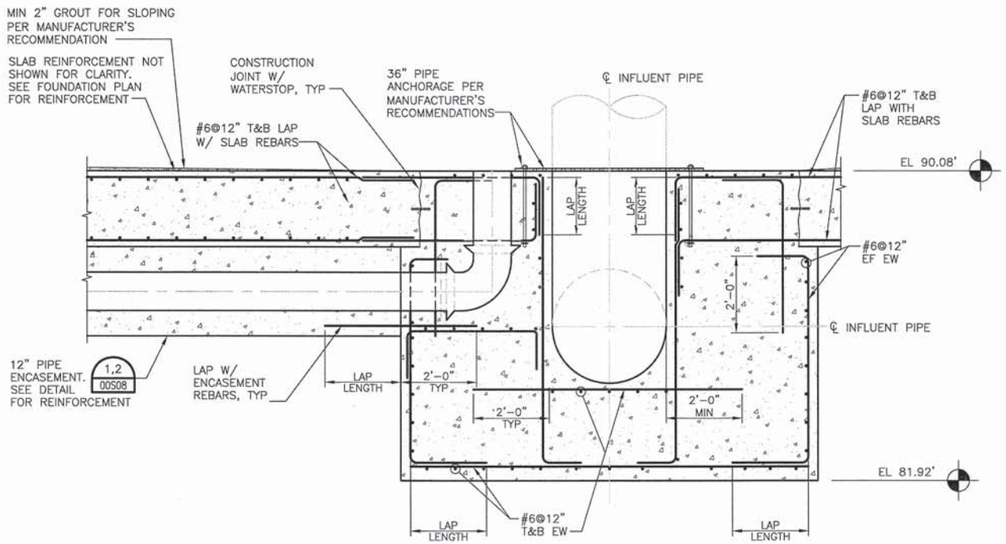

SECTION
1/2" = 1'-0"
A

NOTE: SEE SECTION A FOR ADDITIONAL INFORMATION NOT SHOWN HERE.

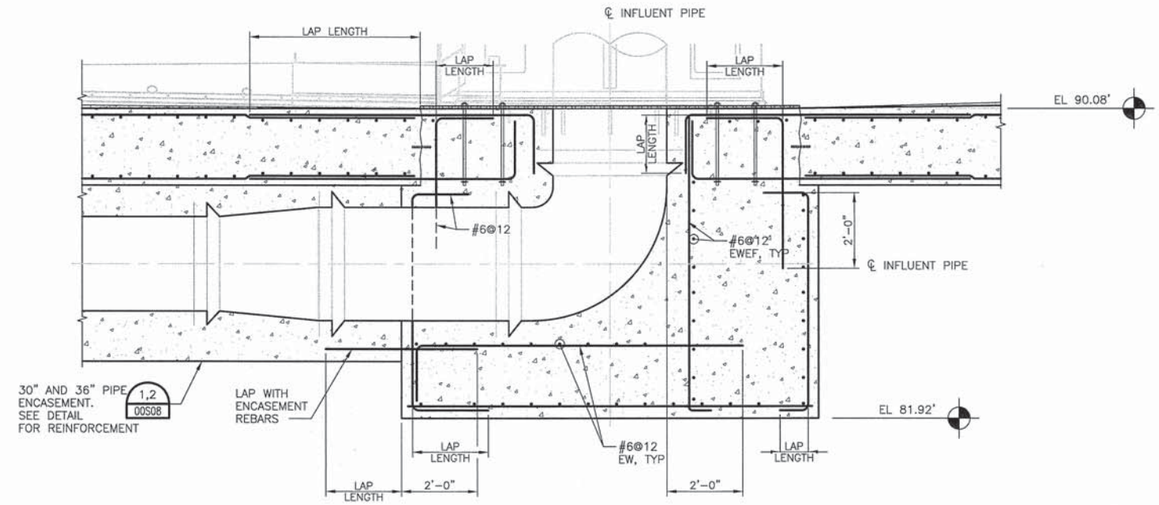

SECTION
1/2" = 1'-0"
B

FILE: 215786-41S104.dwg
DATE: Jun 29, 2015 - 8:46:37pm, zhli

HDR Engineering, Inc.

ISSUE	DATE	DESCRIPTION
A	JUNE 2015	ISSUED FOR BID

PROJECT MANAGER	C. OLSON
DESIGNED	Z. LI
DESIGNED	
CHECKED	C. OLSON
DRAWN	D. ELDREDGE
DATE	JUNE 30, 2015
PROJECT NUMBER	215786

REGISTERED PROFESSIONAL ENGINEER
ZHEN LI
NO. 74809
EXP. 12/31/15
6/30/2015
CIVIL
STATE OF CALIFORNIA

CITY OF PINOLE CALIFORNIA
1903

PINOLE/HERCULES
WATER POLLUTION
CONTROL PLANT UPGRADE
CLIENT PN

STRUCTURAL

SECONDARY CLARIFIERS NO 1 AND NO 2
ENLARGED PLAN AND SECTIONS

0 1" 2"

FILENAME	215786-41S104
SCALE	AS NOTED

SHEET
41S104

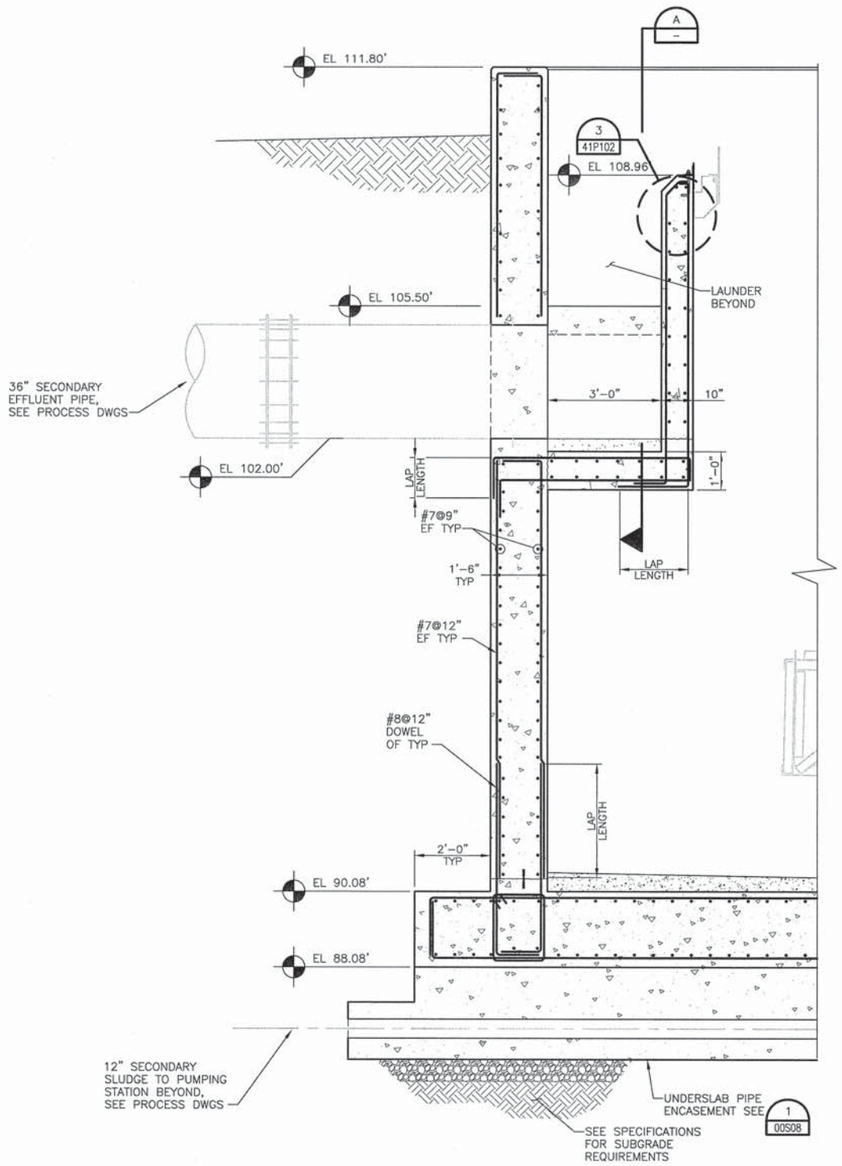

SECTION

SCALE: 1/2" = 1'-0"

B

41S101
41S102

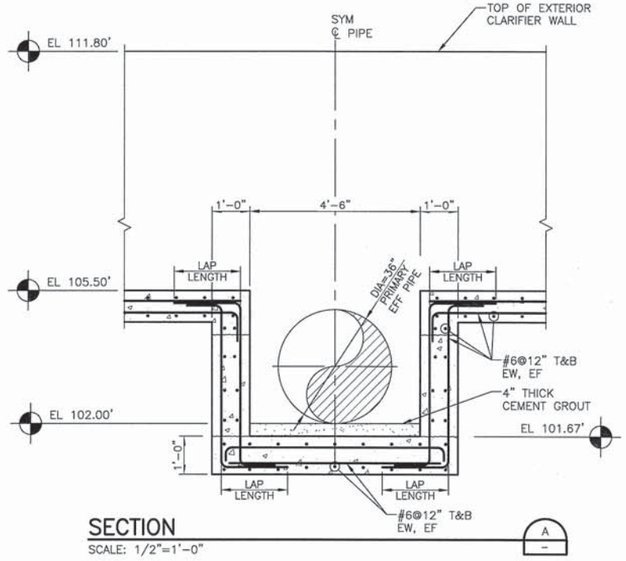

SECTION

SCALE: 1/2"=1'-0"

A

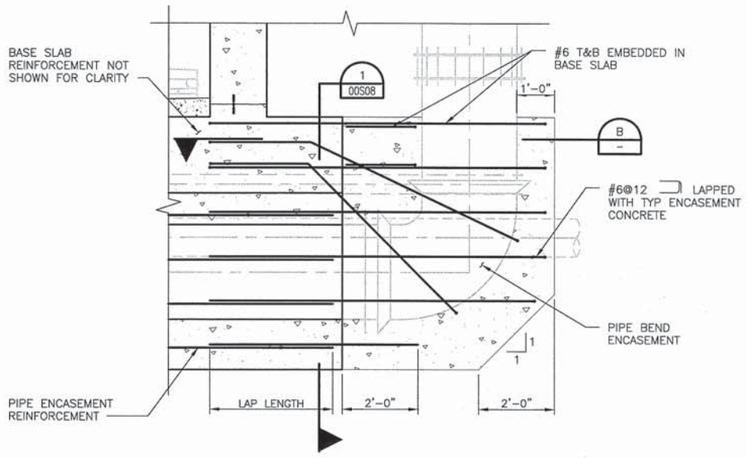

PIPE BEND ENCASEMENT

SCALE: 1/2"=1'-0"

1

41S103

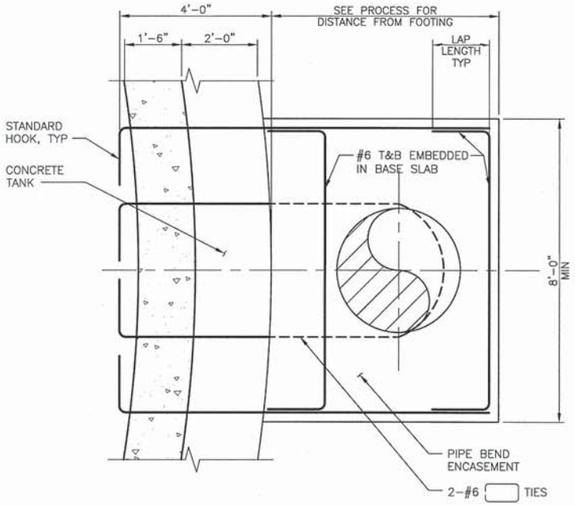

SECTION

SCALE: 1/2"=1'-0"

B

FILE: 215786-41S105.dwg
DATE: Jun 29, 2015 - 8:54:57pm, zhil

HDR

HDR Engineering, Inc.

ISSUE	DATE	DESCRIPTION
A	JUNE 2015	ISSUED FOR BID

PROJECT MANAGER	C. OLSON
DESIGNED	Z. LI
DESIGNED	
CHECKED	O. TAVANGAR
DRAWN	D. ELDREDGE
DATE	JUNE 30, 2015
PROJECT NUMBER	215786

REGISTERED PROFESSIONAL ENGINEER
ZHEN LI
NO. 74809
EXP. 12/31/15
6/30/2015
CIVIL
STATE OF CALIFORNIA

CITY OF PINOLE CALIFORNIA 1903

PINOLE/HERCULES
WATER POLLUTION
CONTROL PLANT UPGRADE
CLIENT PN

STRUCTURAL

SECONDARY CLARIFIERS NO 1 AND NO 2 SECTIONS

0 1" 2"

FILENAME	215786-41S105
SCALE	AS NOTED

SHEET **41S105**

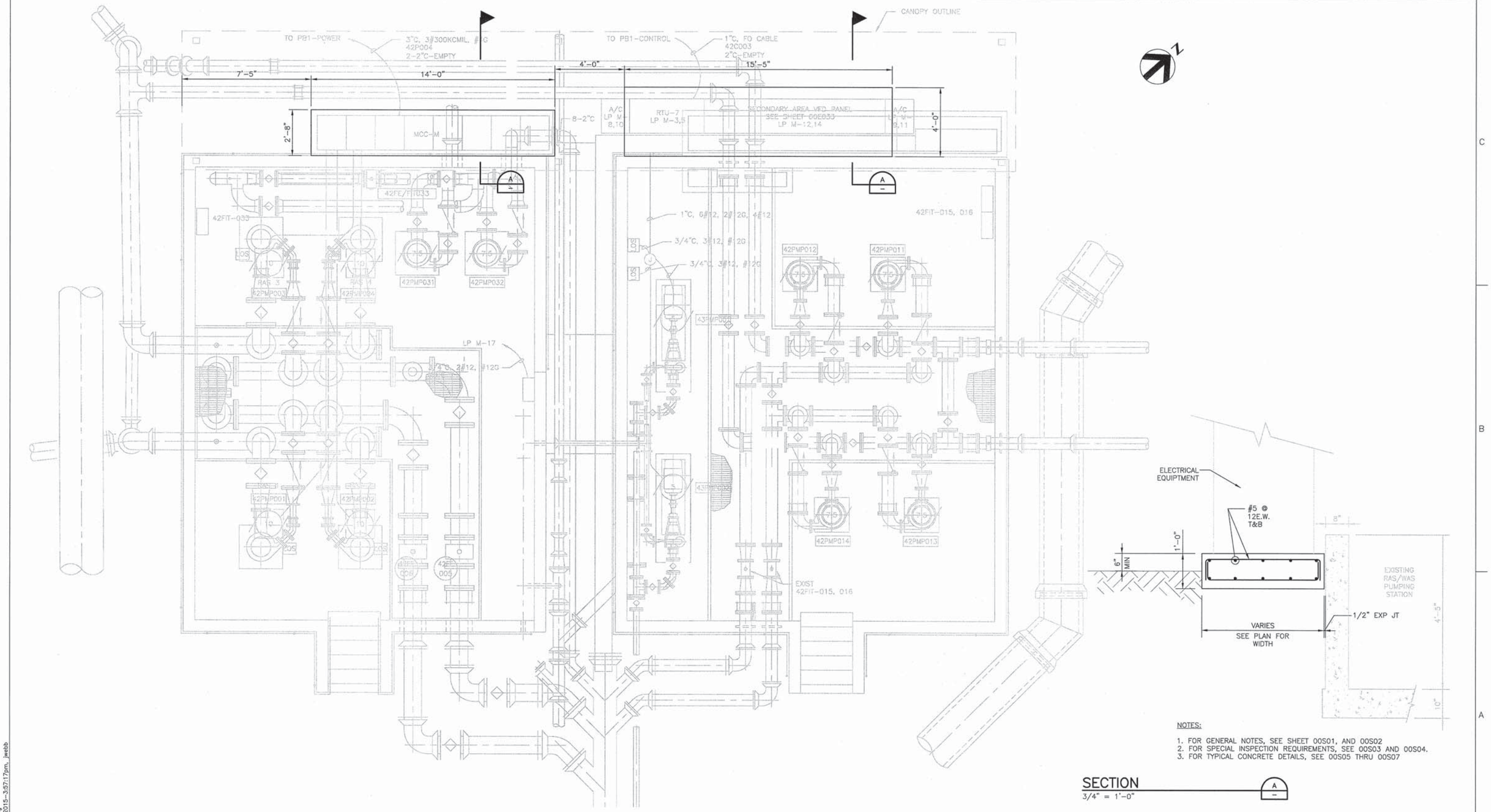

NOTES:

1. FOR GENERAL NOTES, SEE SHEET 00S01, AND 00S02
2. FOR SPECIAL INSPECTION REQUIREMENTS, SEE 00S03 AND 00S04.
3. FOR TYPICAL CONCRETE DETAILS, SEE 00S05 THRU 00S07

ELECTRICAL PADS PLAN

3/8" = 1'-0"

SECTION

3/4" = 1'-0"

FILE: 42S101.dwg
DATE: Jun 29, 2015 - 3:57:17pm, jwebb

HDR Engineering, Inc.

ISSUE	DATE	DESCRIPTION
A	JUNE 2015	ISSUED FOR BID

PROJECT MANAGER	C. OLSON
DESIGNED	Z.LI
DESIGNED	
CHECKED	O.TAVANGAR
DRAWN	S.LARI
DATE	JUNE 30, 2015
PROJECT NUMBER	215786

REGISTERED PROFESSIONAL ENGINEER
ZHEN LI
NO. 74809
EXP. 12/31/15
6/30/2015
CIVIL
STATE OF CALIFORNIA

CITY OF PINOLE CALIFORNIA 1903

PINOLE/HERCULES
WATER POLLUTION
CONTROL PLANT UPGRADE
CLIENT PN

STRUCTURAL

EXISTING RAS/WAS PUMPING STATIONS
ELECTRICAL PADS PLAN AND SECTION

0 1" 2"

FILENAME	42S101
SCALE	3/8"=1'-0"

SHEET
42S101

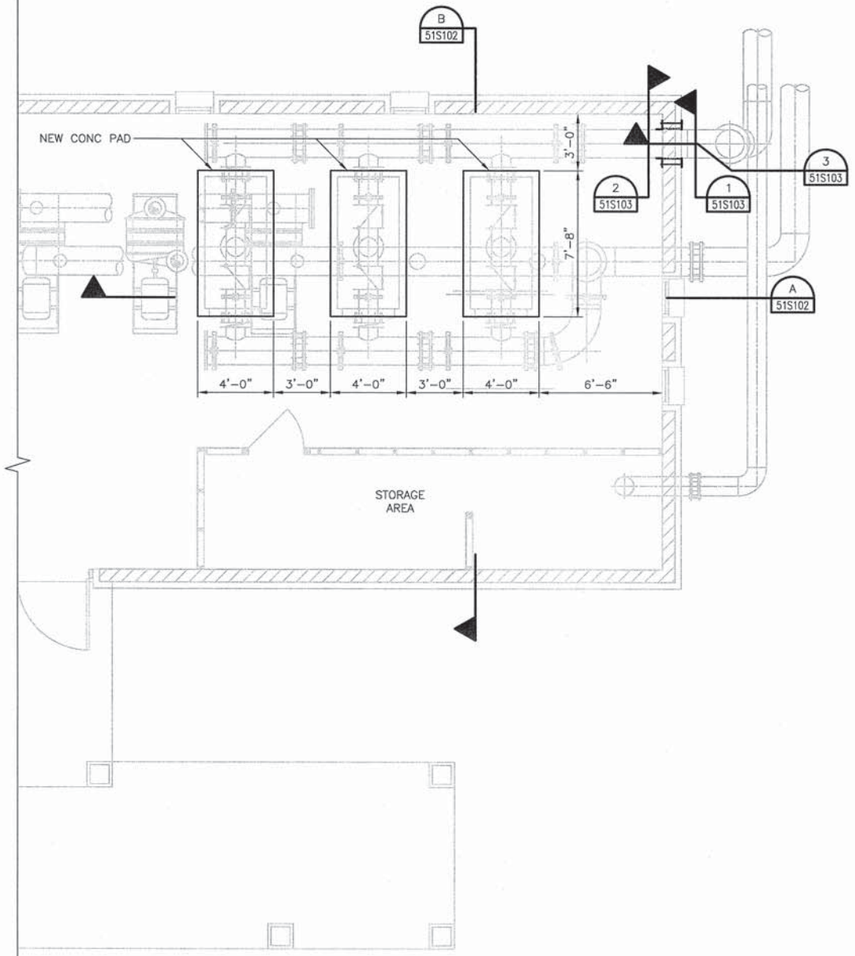

PARTIAL FLOOR PLAN

SCALE 1/4" = 1'-0"

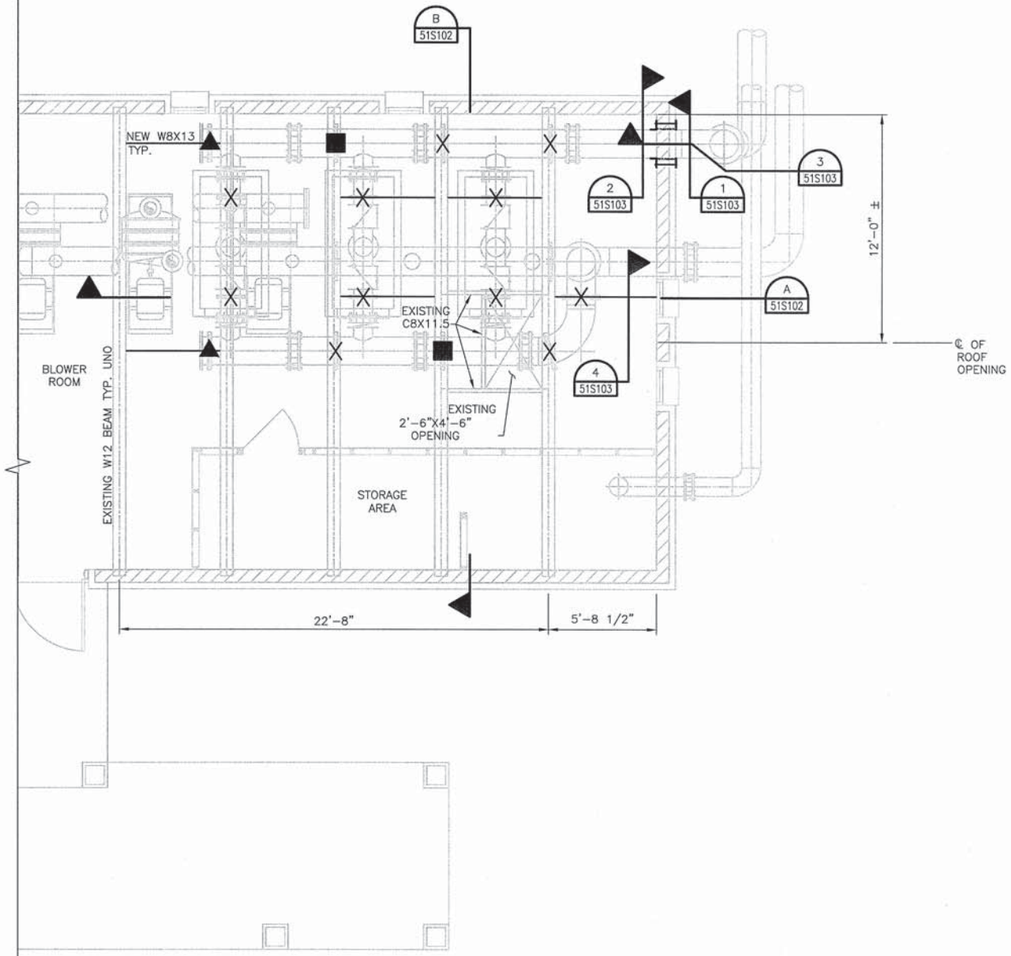

PARTIAL ROOF FRAMING PLAN

SCALE 1/4" = 1'-0"

NOTES:

1. FOR GENERAL NOTES, SEE SHEET 00S01 AND 00S02.
2. FOR DEMOLITION INFORMATION, SEE 51D101 AND 51D102.
3. FOR TYPICAL CONCRETE DETAILS, SEE SHEETS 00S05 THRU 00S08.
4. FOR TYPICAL REINFORCING DETAILS, SEE 00S09.
5. FOR TYPICAL STEEL DETAILS, SEE SHEET 00S14 THROUGH 00S16.
6. FOR TYPICAL STEEL BEAM/GIRDER CONNECTIONS SEE 9/00S14.
7. X DENOTES PIPE SUPPORT, GRAVITY ONLY, 11 IN TOTAL.
8. ▲ DENOTES PIPE SUPPORT, GRAVITY AND SEISMIC BRACING IN PIPE LONGITUDINAL DIRECTION, 2 IN TOTAL.
9. ■ DENOTES PIPE SUPPORT, GRAVITY AND SEISMIC BRACING IN PIPE TRANSVERSE DIRECTION, 2 IN TOTAL.
10. FOR TYPICAL PIPE SUPPORT AND SEISMIC BRACING DETAILS, SEE MECHANICAL DRAWINGS.
11. LOCATE NEW W8 BEAMS SO THAT THEY ARE CENTERLINED WITH PIPE SUPPORTS.



FILE: 51S101.dwg
DATE: Jun 29, 2015 - 7:59:22pm, zhli

HDR Engineering, Inc.

ISSUE	DATE	DESCRIPTION
A	JUNE 2015	ISSUED FOR BID

PROJECT MANAGER	C. OLSON
DESIGNED	Z. LI
DESIGNED	
CHECKED	O. TAVANGAR
DRAWN	D. ELDREDGE
DATE	JUNE 30, 2015
PROJECT NUMBER	215786

REGISTERED PROFESSIONAL ENGINEER
ZHEN LI
NO. 74809
EXP. 12/31/15
CIVIL
STATE OF CALIFORNIA

CITY OF PINOLE CALIFORNIA
1903

PINOLE/HERCULES
WATER POLLUTION
CONTROL PLANT UPGRADE
CLIENT PN

STRUCTURAL

BLOWER BUILDING
PARTIAL FLOOR PLAN & ROOF FRAMING PLAN

0 1" 2"

FILENAME	51S101
SCALE	AS NOTED

SHEET
51S101

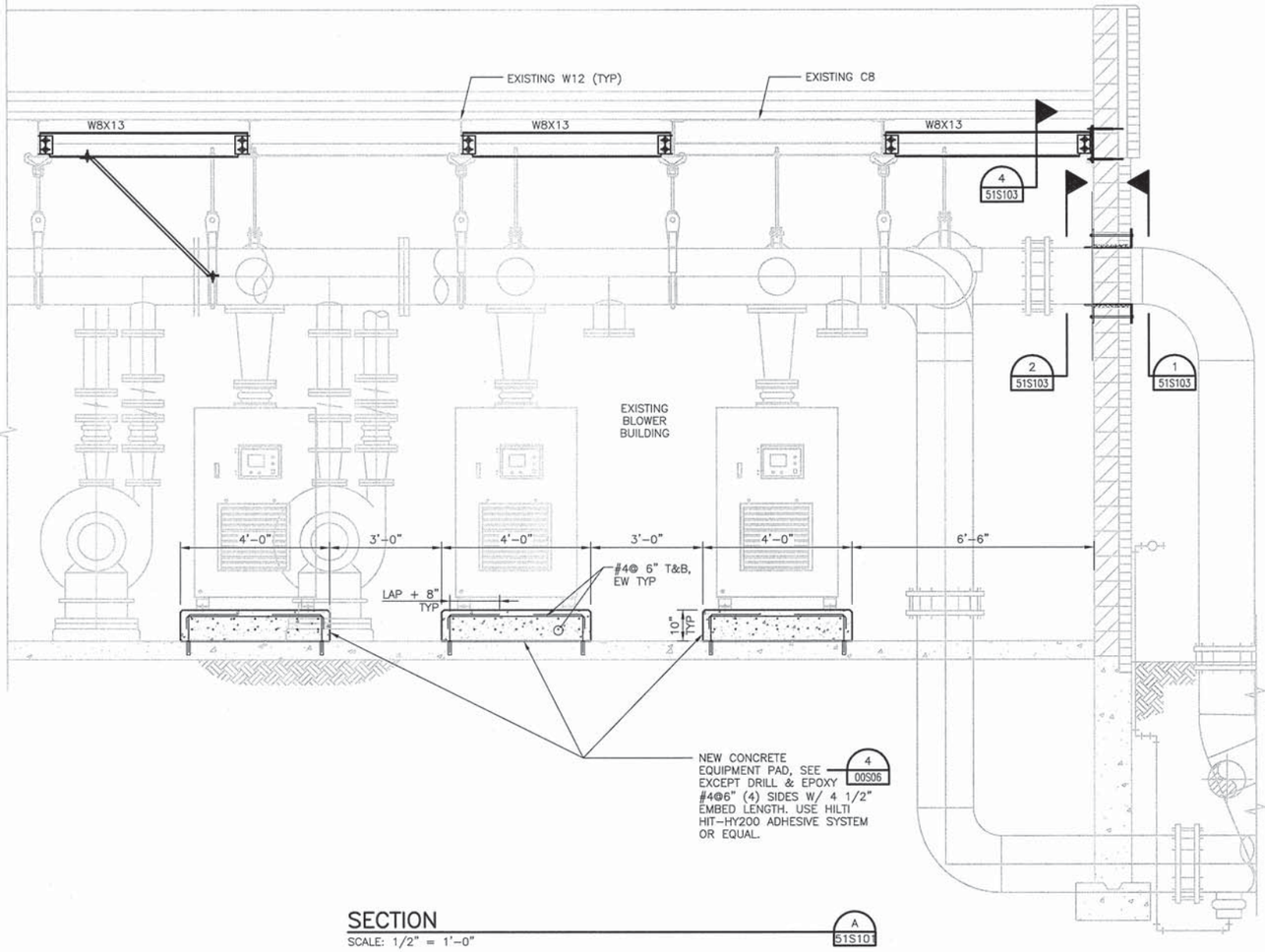

SECTION
SCALE: 1/2" = 1'-0"
A
51S101

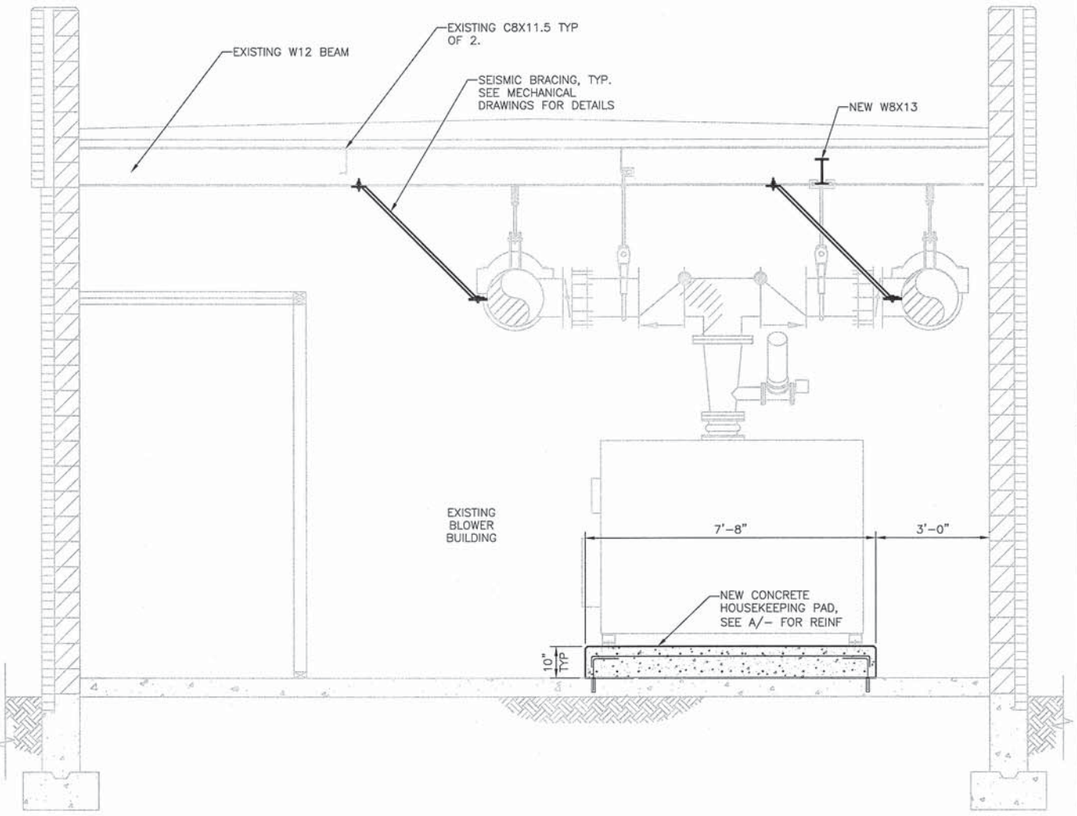

SECTION
SCALE: 1/2" = 1'-0"
B
51S101

FILE: 51S102.dwg
DATE: Jun 29, 2015 - 3:57:25pm, jwebb

HDR
HDR Engineering, Inc.

ISSUE	DATE	DESCRIPTION
A	JUNE 2015	ISSUED FOR BID

PROJECT MANAGER	C. OLSON
DESIGNED	Z. LI
DESIGNED	
CHECKED	O. TAVANGAR
DRAWN	D. ELDREDGE
DATE	JUNE 30, 2015
PROJECT NUMBER	215786

REGISTERED PROFESSIONAL ENGINEER
ZHEN LI
NO. 74809
EXP. 12/31/15
6/30/2015
CIVIL
STATE OF CALIFORNIA

CITY OF PINOLE CALIFORNIA
1903

PINOLE/HERCULES
WATER POLLUTION
CONTROL PLANT UPGRADE
CLIENT PN

STRUCTURAL

BLOWER BUILDING SECTIONS

0 1" 2"

FILENAME	51S102
SCALE	AS NOTED

SHEET
51S102

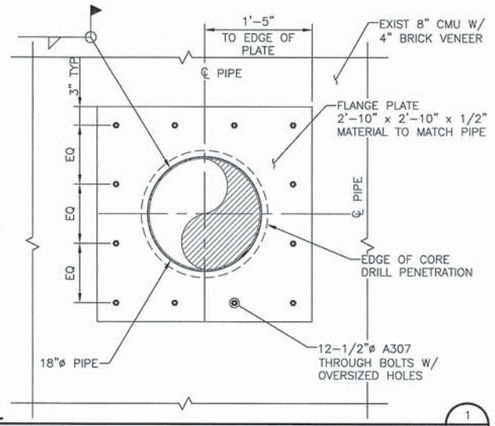

DETAIL
SCALE: 1"=1'-0"
1 / 51S101

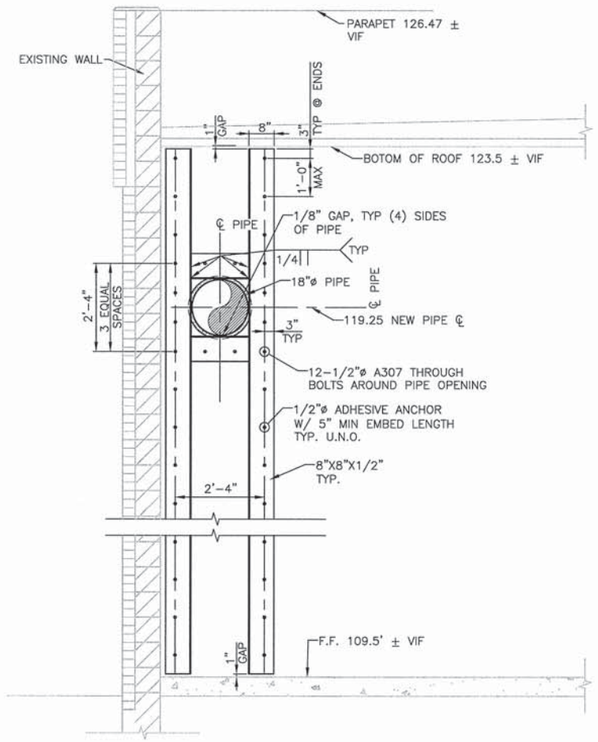

DETAIL
SCALE: 1/2"=1'-0"
2 / 51S101

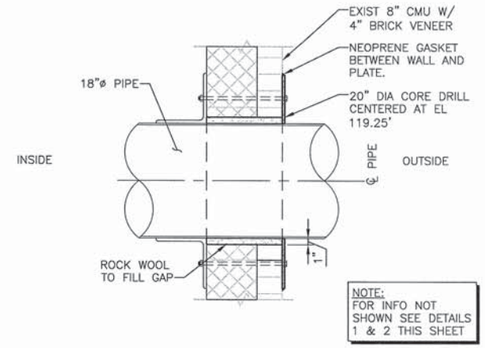

NOTE:
FOR INFO NOT SHOWN SEE DETAILS 1 & 2 THIS SHEET

DETAIL
SCALE: 1"=1'-0"
3 / 51S101

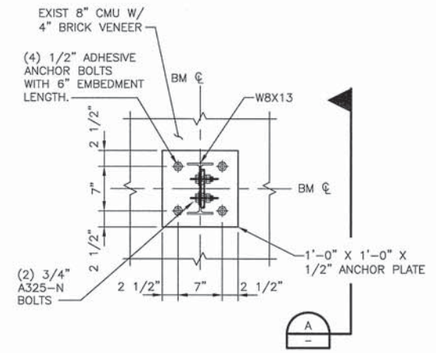

DETAIL
SCALE: 1"=1'-0"
4 / 51S101

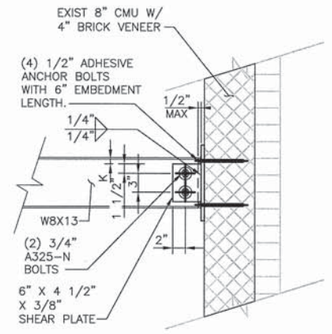

DETAIL
SCALE: 1"=1'-0"
A / –

FILE: 51S103.dwg
DATE: Jun 29, 2015--7:52:12pm, zhli

HDR
HDR Engineering, Inc.

ISSUE	DATE	DESCRIPTION
A	JUNE 2015	ISSUED FOR BID

PROJECT MANAGER	C. OLSON
DESIGNED	Z. LI
DESIGNED	
CHECKED	C. OLSON
DRAWN	D. ELDREDGE
DATE	JUNE 30, 2015
PROJECT NUMBER	215786

REGISTERED PROFESSIONAL ENGINEER
ZHEN LI
NO. 74809
EXP. 12/31/15
CIVIL
STATE OF CALIFORNIA

CITY OF PINOLE CALIFORNIA 1903

PINOLE/HERCULES
WATER POLLUTION
CONTROL PLANT UPGRADE
CLIENT PN

STRUCTURAL

BLOWER BUILDING DETAILS

0 1" 2"

FILENAME	51S103
SCALE	AS NOTED

SHEET
51S103

NOTES:

1. FOR GENERAL NOTES, SEE SHEET 00S01 AND 00S02.
2. FOR SPECIAL INSPECTION REQUIREMENTS, SEE 00S03 AND 00S04.
3. FOR TYPICAL CONCRETE DETAILS, SEE SHEETS 00S05 THRU 00S08.
4. FOR TYPICAL REINFORCING DETAILS, SEE 00S09.
5. FOR TYPICAL PILE DETAILS AND SCHEDULE, SEE SHEET 00S10.
6. "61P–X" DENOTES 16"ø EDTTEX PILES. SEE SHEET 00S10 FOR DETAILS AND SCHEDULE.
7. ALL COLUMNS, WALLS, PILES, AND PILECAPS ARE CENTERED ON GRID LINES, UNLESS NOTED OTHERWISE.

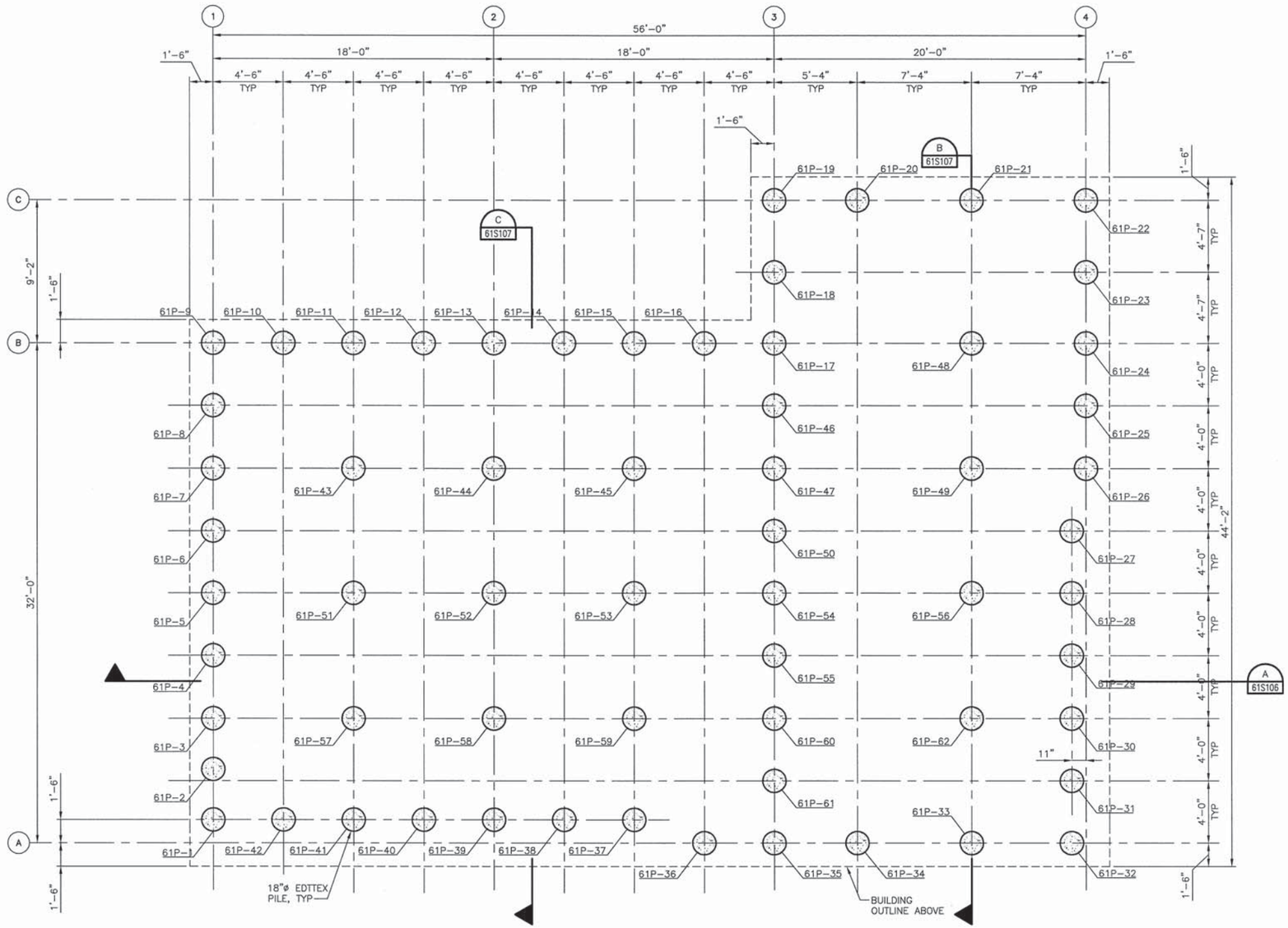

PILE LAYOUT PLAN

1/4" = 1'–0"



FILE: 215786–61S101.dwg
DATE: Jun 30, 2015–8:43:39am, jwebb

HDR
HDR Engineering, Inc.

ISSUE	DATE	DESCRIPTION
A	JUNE 2015	ISSUED FOR BID

PROJECT MANAGER	C. OLSON
DESIGNED	M. MOSTAFA
DESIGNED	
CHECKED	O. TAVANGAR
DRAWN	D. ELDREDGE
DATE	JUNE 30, 2015
PROJECT NUMBER	215786

REGISTERED PROFESSIONAL ENGINEER MOHAMMADREZA MOSTAFA NO. 78649 EXP. 09/30/15 CIVIL STATE OF CALIFORNIA 06/30/15

CITY OF PINOLE CALIFORNIA 1903

PINOLE/HERCULES
WATER POLLUTION
CONTROL PLANT UPGRADE
CLIENT PN

STRUCTURAL

SOILDS HANDLING BUILDING
PILE LAYOUT PLAN

0 1" 2"

FILENAME	215786–61S101
SCALE	AS NOTED

SHEET **61S101**

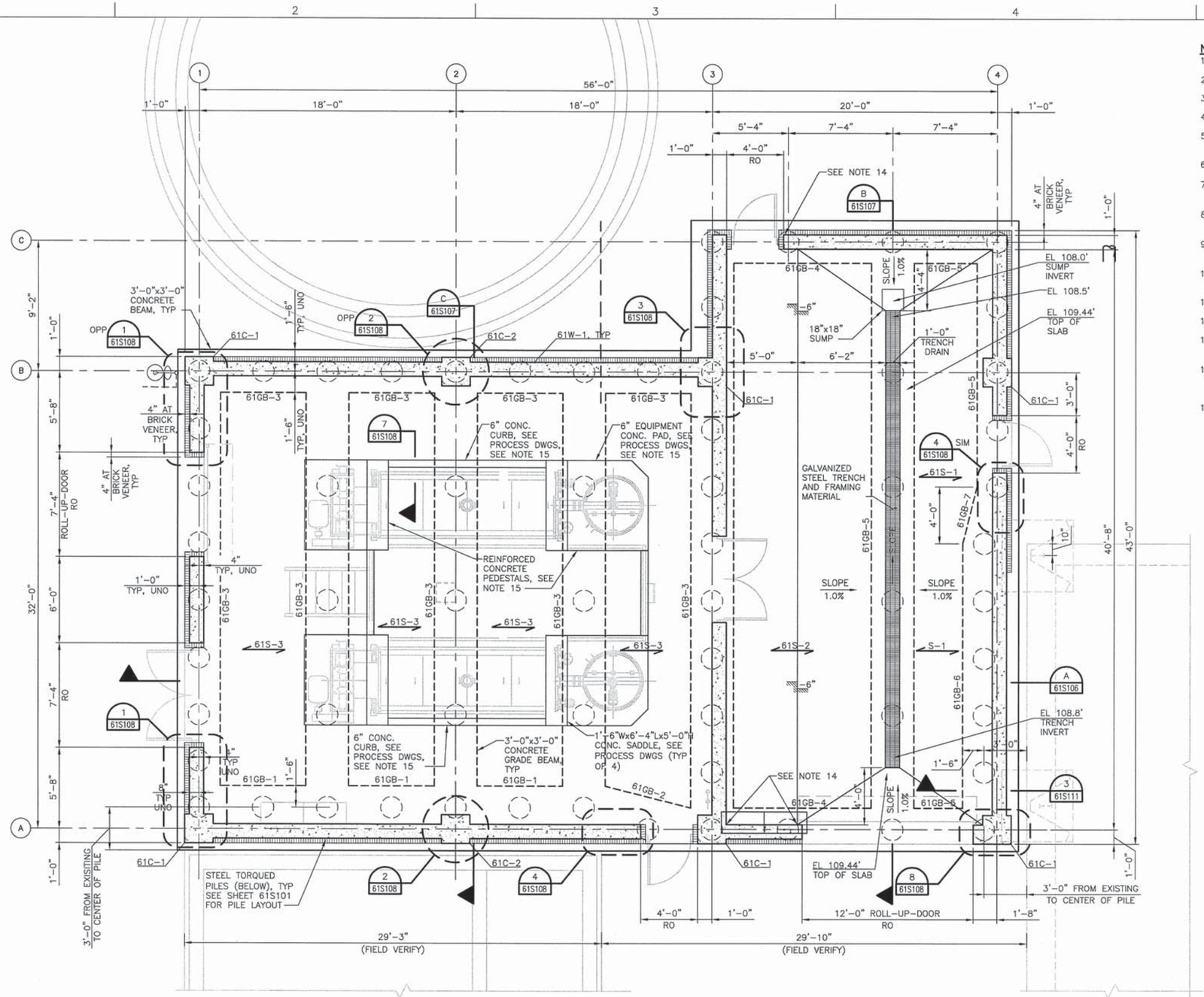

FOUNDATION PLAN

1/4" = 1'-0"

NOTES:

1. FOR GENERAL NOTES, SEE SHEET 00S01 AND 00S02.
2. FOR SPECIAL INSPECTION REQUIREMENTS, SEE 00S03 AND 00S04.
3. FOR TYPICAL CONCRETE DETAILS, SEE SHEETS 00S05 THRU 00S08.
4. FOR TYPICAL REINFORCING DETAILS, SEE 00S09.
5. FOR TYPICAL CONCRETE BEAM, SLAB, AND WALL DETAILS AND SCHEDULES, SEE SHEETS 00S11 AND 00S12.
6. FOR TYPICAL GRATING DETAILS, SEE SHEET 00S18.
7. "61S-X" DENOTES CONCRETE SLAB. SEE SHEET 00S05 AND 00S12 FOR DETAILS AND SCHEDULE.
8. "61GB-X" DENOTES CONCRETE GRADE BEAM. SEE SHEET 00S11 FOR DETAILS AND SCHEDULE.
9. "61W-X" DENOTES CONCRETE WALL. SEE SHEET 00S11 FOR WALL REINFORCING SCHEDULE.
10. "61C-X" DENOTES CONCRETE COLUMN. SEE SHEET 00S08 FOR COLUMN SCHEDULE.
11. DENOTES BRICK VENEER.
12. DENOTES CHANGE IN TOP OF CONCRETE ELEVATION.
13. ALL COLUMNS, WALLS, PILES, AND PILECAPS ARE CENTERED ON GRID LINES, UNLESS NOTED OTHERWISE.
14. AROUND THE OPENINGS USE #4 CLOSED TIES TO ENCLOSE (4) VERTICAL REBARS UP TO THE TOP OF THE OPENING UNLESS OTHERWISE SHOWN ON THE DETAILS ON SHEET 61S108.
15. EXACT DIMENSIONS FOR EQUIPMENT SUPPORT TO BE DETERMINED AT THE TIME OF CONSTRUCTION AFTER APPROVAL OF EQUIPMENT SHOP DRAWINGS.

TRUE NORTH

PROJECT NORTH

FILE: 215786-61S102.dwg
DATE: Jun 30, 2015-8:43:43am, jwebb

HDR Engineering, Inc.

ISSUE	DATE	DESCRIPTION
A	JUNE 2015	ISSUED FOR BID

PROJECT MANAGER	C. OLSON
DESIGNED	M. MOSTAFA
DESIGNED	
CHECKED	O. TAVANGAR
DRAWN	D. ELDREDGE
DATE	JUNE 30, 2015
PROJECT NUMBER	215786

REGISTERED PROFESSIONAL ENGINEER MORAMMADREZA MOSTAFA NO. 78649 EXP. 09/30/15 CIVIL STATE OF CALIFORNIA 06/30/15

CITY OF PINOLE CALIFORNIA 1903

PINOLE/HERCULES WATER POLLUTION CONTROL PLANT UPGRADE CLIENT PN

STRUCTURAL

SOILDS HANDLING BUILDING FOUNDATION PLAN

0 1" 2"

FILENAME	215786-61S102
SCALE	AS NOTED

SHEET 61S102

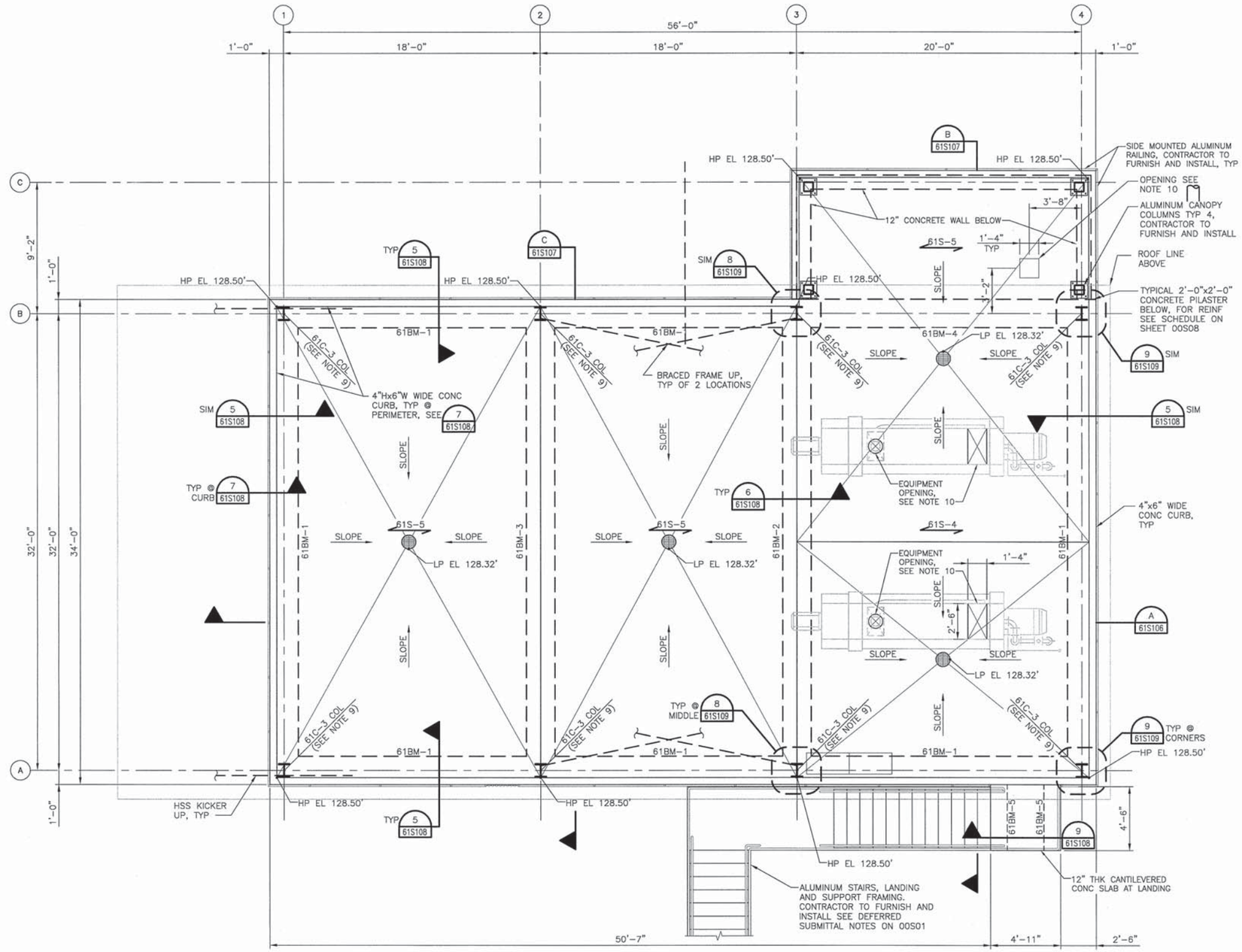

SECOND FLOOR FRAMING PLAN

1/4" = 1'-0"

NOTES:

1. FOR GENERAL NOTES, SEE SHEET 00S01 AND 00S02.
2. FOR SPECIAL INSPECTION REQUIREMENTS, SEE 00S03 AND 00S04.
3. FOR TYPICAL CONCRETE DETAILS, SEE SHEETS 00S05 THRU 00S08.
4. FOR TYPICAL REINFORCING DETAILS, SEE 00S09.
5. FOR TYPICAL CONCRETE BEAM, SLAB, AND WALL DETAILS AND SCHEDULES, SEE SHEETS 00S11 AND 00S12.
6. "61S-X" DENOTES CONCRETE SLAB. SEE SHEET 00S05 AND 00S12 FOR DETAILS AND SCHEDULE.
7. "61BM-X" DENOTES CONCRETE BEAM. SEE SHEET 00S12 FOR DETAILS AND SCHEDULE.
8. ALL COLUMNS, WALLS, PILES, AND PILECAPS ARE CENTERED ON GRID LINES, UNLESS NOTED OTHERWISE.
9. 61C-X COL. DENOTES STEEL COLUMN. SEE COLUMN SCHEDULE FOR COLUMN TYPE AND SIZE ON 5/00S14.
10. CONTRACTOR SHALL VERIFY EXACT LOCATION OF THE EQUIPMENT AND SIZE/LOCATIONS OF EQUIPMENT OPENINGS PRIOR TO POURING THE CONCRETE SLAB.

TRUE NORTH

PROJECT NORTH

FILE: 215786-61S103.dwg
DATE: Jun 30, 2015-11:29:37am, rsnider

HDR Engineering, Inc.

ISSUE	DATE	DESCRIPTION
A	JUNE 2015	ISSUED FOR BID

PROJECT MANAGER	C. OLSON
DESIGNED	M. MOSTAFA
DESIGNED	
CHECKED	O. TAVANGAR
DRAWN	D. ELDREDGE
DATE	JUNE 30, 2015
PROJECT NUMBER	215786

REGISTERED PROFESSIONAL ENGINEER MOHAMADREZA MOSTAFA NO. 78649 EXP. 09/30/15 CIVIL STATE OF CALIFORNIA 06/30/15

CITY OF PINOLE CALIFORNIA 1903

PINOLE/HERCULES WATER POLLUTION CONTROL PLANT UPGRADE CLIENT PN

STRUCTURAL

SOLIDS HANDLING BUILDING SECOND FLOOR FRAMING PLAN

0 1" 2"

FILENAME	215786-61S103
SCALE	AS NOTED

SHEET 61S103

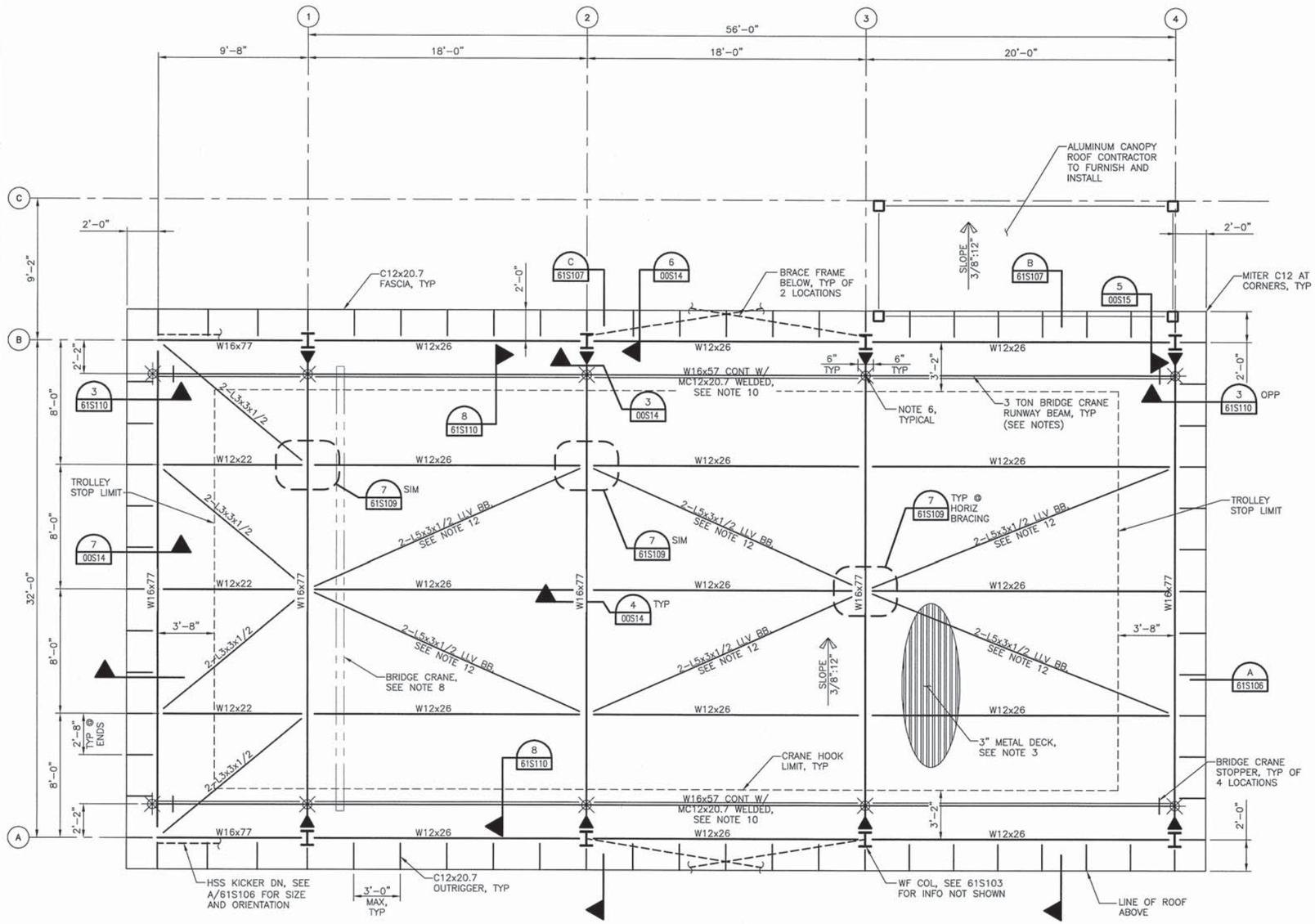

CRANE FRAMING PLAN

1/4" = 1'-0"

NOTES:

1. FOR GENERAL NOTES, SEE SHEET 00S01 AND 00S02.
2. FOR SPECIAL INSPECTION REQUIREMENTS, SEE 00S03 AND 00S04.
3. FOR TYPICAL METAL DECK DETAILS, SEE SHEET 00S17.
4. FOR TYPICAL STEEL DETAILS, SEE SHEET 00S14, 00S015 AND 00S16.
5. ALL COLUMNS, WALLS, PILES, AND PILECAPS ARE CENTERED ON GRID LINES, UNLESS NOTED OTHERWISE.
6. DENOTES TYPICAL CRANE RAIL SUPPORT, SEE DETAIL X/XXXXXX.
7. DENOTES MOMENT FRAME CONNECTION, SEE 00S10 FOR DETAILS.
8. 3 TON UNDER HUNG CRANE GIRDER.
9. REFERENCE DESIGN LOADS OUTLINED ON SHEET 00S001 FOR ADDITIONAL DESIGN LOAD REQUIREMENTS.
10. MC12x20.7 STOPS AT 6" FROM CENTERLINE OF PERPENDICULAR W16 GIRDER BEAMS, TYPICAL.
11. DENOTES BRACING BELOW, SEE SHEET 61S106 FOR SIZE AND ORIENTATION.
12. PROVIDE STITCH PLATE FOR ALL DOUBLE ANGLED BRACING PER CBC.
13. CONTRACTOR TO VERIFY CRANE HOOK EXTENTS FROM MANUFACTURER FOR CLEARANCES PRIOR TO CONSTRUCTION.

TRUE NORTH

PROJECT NORTH

FILE: 215786-61S104.dwg
DATE: Jun 30, 2015-8:43:50am, jwebb

HDR Engineering, Inc.

ISSUE	DATE	DESCRIPTION
A	JUNE 2015	ISSUED FOR BID

PROJECT MANAGER	C. OLSON
DESIGNED	M. MOSTAFA
DESIGNED	
CHECKED	O. TAVANGAR
DRAWN	D. ELDREDGE
DATE	JUNE 30, 2015
PROJECT NUMBER	215786

REGISTERED PROFESSIONAL ENGINEER MOHAMMADREZA MOSTAFA NO. 78649 EXP. 09/30/15 CIVIL STATE OF CALIFORNIA 06/30/15

CITY OF PINOLE CALIFORNIA 1903

PINOLE/HERCULES WATER POLLUTION CONTROL PLANT UPGRADE CLIENT PN

STRUCTURAL

SOLIDS HANDLING BUILDING CRANE / ROOF FRAMING PLAN

0 1" 2"

FILENAME	215786-61S104
SCALE	AS NOTED

SHEET 61S104

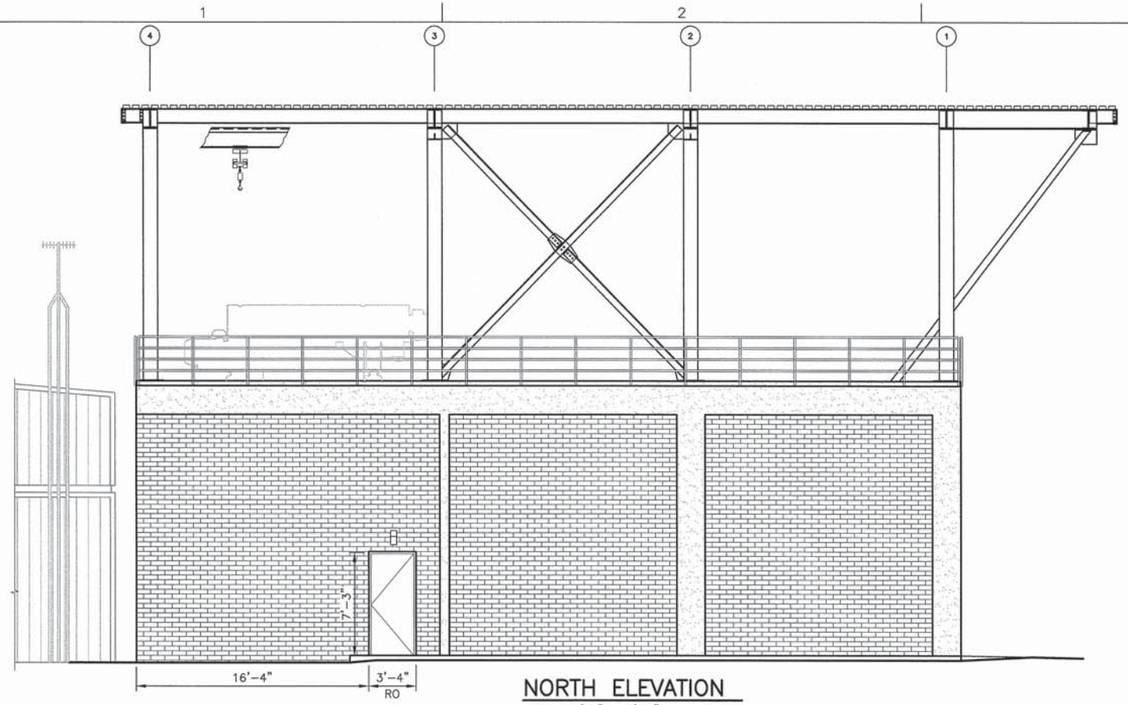

NORTH ELEVATION
SCALE: 3/16" = 1'-0"

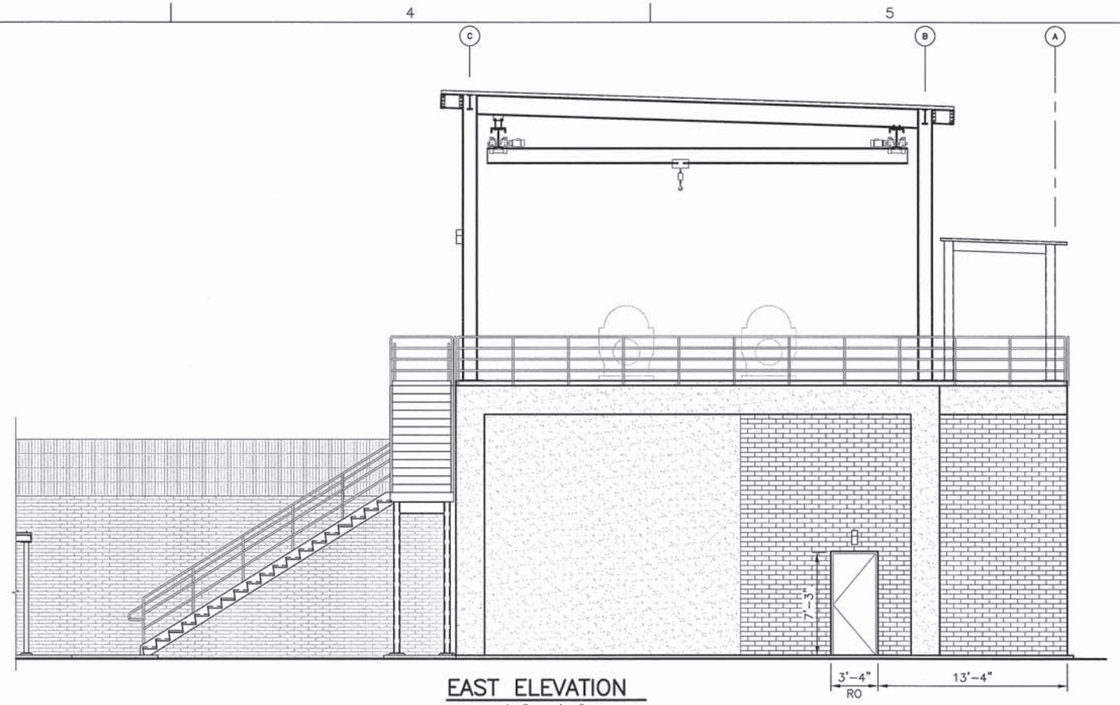

EAST ELEVATION
SCALE: 3/16" = 1'-0"

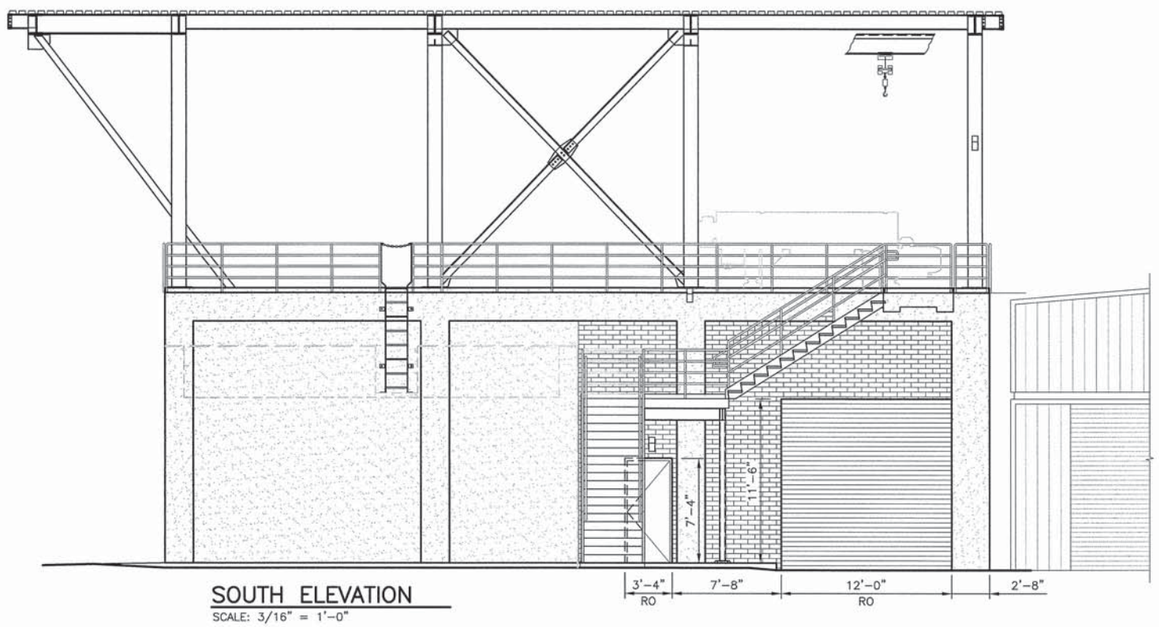

SOUTH ELEVATION
SCALE: 3/16" = 1'-0"

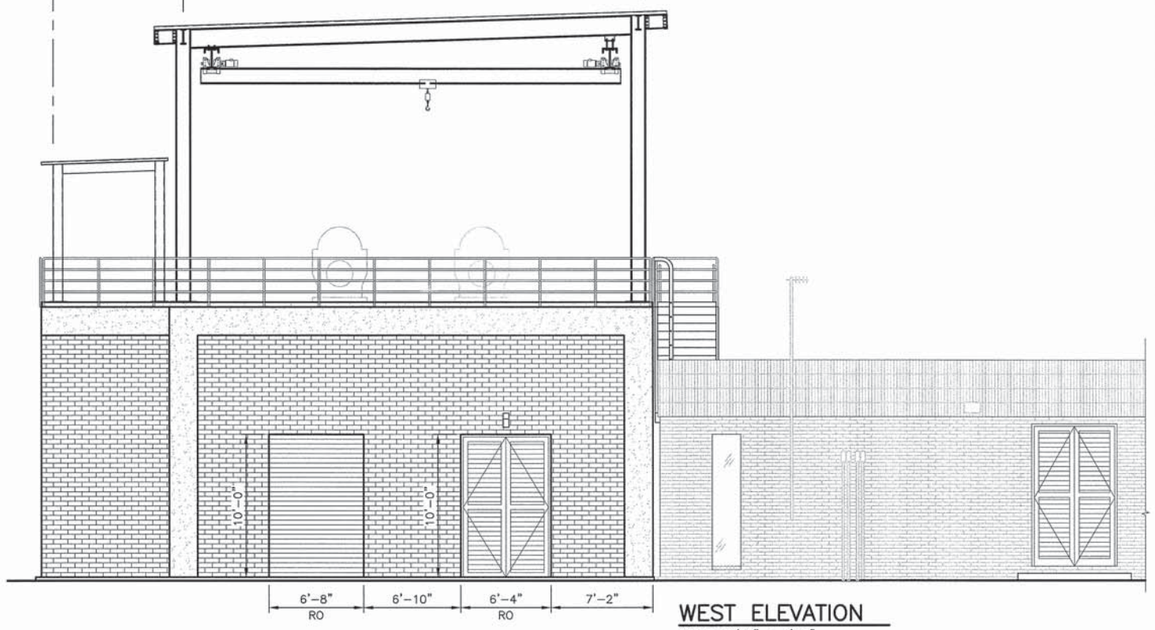

WEST ELEVATION
SCALE: 3/16" = 1'-0"

ISSUE	DATE	DESCRIPTION
A	JUNE 2015	ISSUED FOR BID

PROJECT MANAGER	C. OLSON
DESIGNED	M. MOSTAFA
DESIGNED	
CHECKED	O. TAVANGAR
DRAWN	D. ELDREDGE
DATE	JUNE 30, 2015
PROJECT NUMBER	215786

REGISTERED PROFESSIONAL ENGINEER
MOHAMMADREZA MOSTAFA
NO. 78649
EXP. 09/30/15
CIVIL
STATE OF CALIFORNIA
06/30/15

HDR
HDR Engineering, Inc.

CITY OF PINOLE CALIFORNIA 1903

PINOLE/HERCULES
WATER POLLUTION
CONTROL PLANT UPGRADE
CLIENT PN

STRUCTURAL

SOLIDS HANDLING BUILDING
STRUCTURAL ELEVATONS

0 1" 2"

FILENAME	215786-61S105
SCALE	AS NOTED
SHEET	61S105

FILE: 215786-61S105.dwg
DATE: Jun 30, 2015-8:43:55am, jwebb

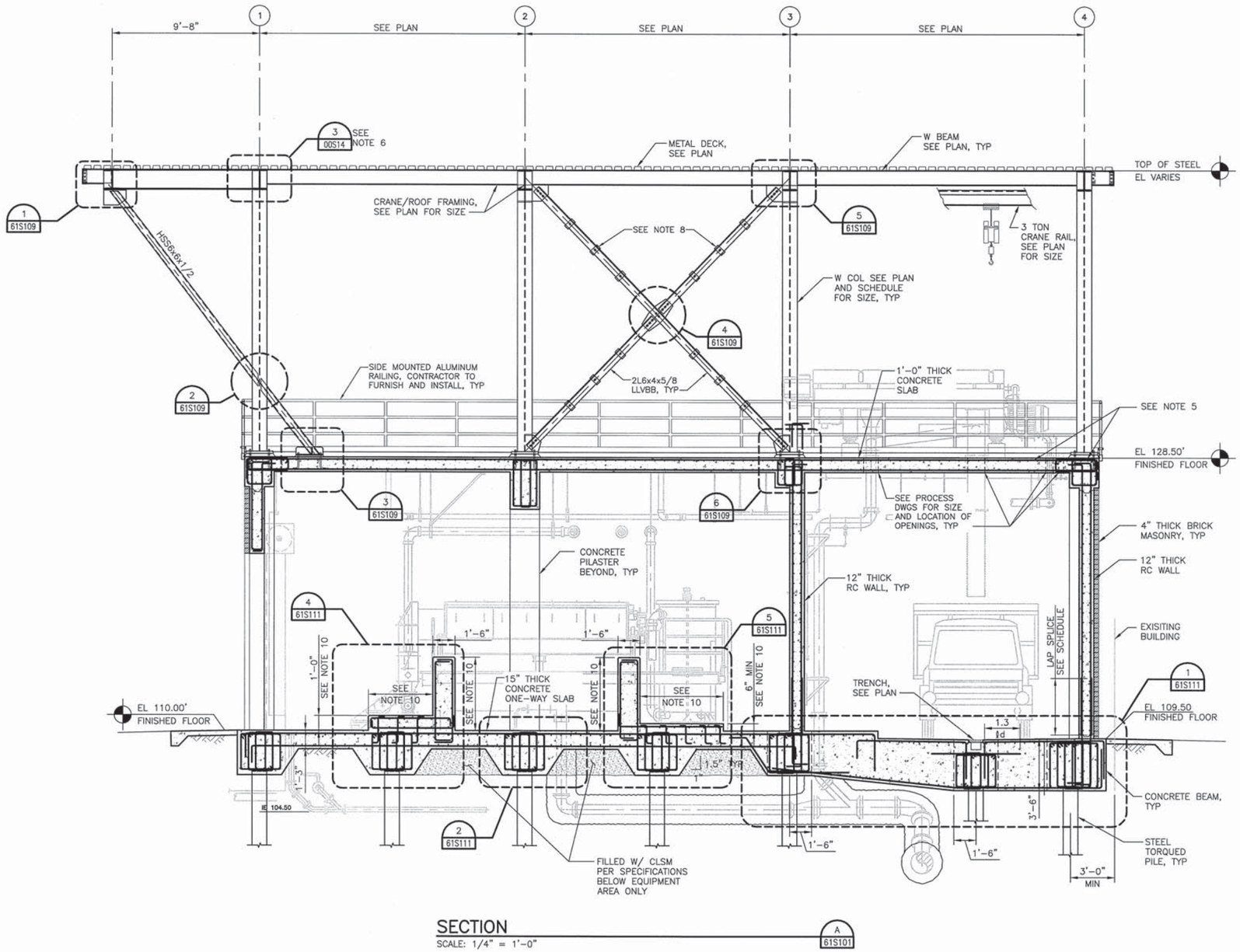

SECTION A 61S101
SCALE: 1/4" = 1'-0"

NOTES:

1. FOR GENERAL NOTES, SEE SHEET 00S01 AND 00S02.
2. FOR SPECIAL INSPECTION REQUIREMENTS, SEE 00S03 AND 00S04.
3. FOR TYPICAL CONCRETE DETAILS, SEE SHEETS 00S05 THRU 00S08.
4. FOR TYPICAL REINFORCING DETAILS, SEE 00S09.
5. FOR TYPICAL CONCRETE BEAM, SLAB, AND WALL DETAILS AND SCHEDULES, SEE SHEETS 00S11 AND 00S12.
6. FOR TYPICAL METAL DECK DETAILS, SEE SHEET 00S17.
7. FOR TYPICAL STEEL DETAILS, SEE SHEET 00S14, 00S015 AND 00S16.
8. PROVIDE STITCH PLATE FOR ALL DOUBLE ANGLED BRACING PER CBC.
9. FOR TYPICAL GRADE BEAM DETAILS AND SCHEDULE SEE 00S11.
10. EXACT DIMENSIONS FOR EQUIPMENT SUPPORT TO BE DETERMINED AT THE TIME OF CONSTRUCTION AFTER APPROVAL OF EQUIPMENT SHOP DRAWING. SEE 61S111 FOR REINFORCEMENT.

FILE: 215786-61S106.dwg
DATE: Jun 30, 2015-8:43:58am, jwebb

HDR
HDR Engineering, Inc.

ISSUE	DATE	DESCRIPTION
A	JUNE 2015	ISSUED FOR BID

PROJECT MANAGER	C. OLSON
DESIGNED	M. MOSTAFA
DESIGNED	
CHECKED	O. TAVANGAR
DRAWN	D. ELDREDGE
DATE	JUNE 30, 2015
PROJECT NUMBER	215786

REGISTERED PROFESSIONAL ENGINEER MOHAMMADREZA MOSTAFA NO. 78649 EXP. 09/30/15 CIVIL STATE OF CALIFORNIA
06/30/15

CITY OF PINOLE CALIFORNIA 1903

PINOLE/HERCULES WATER POLLUTION CONTROL PLANT UPGRADE CLIENT PN

STRUCTURAL

SOLIDS HANDLING BUILDING BUILDING SECTION A

0 1" 2"

FILENAME	215786-61S106
SCALE	AS NOTED

SHEET 61S106

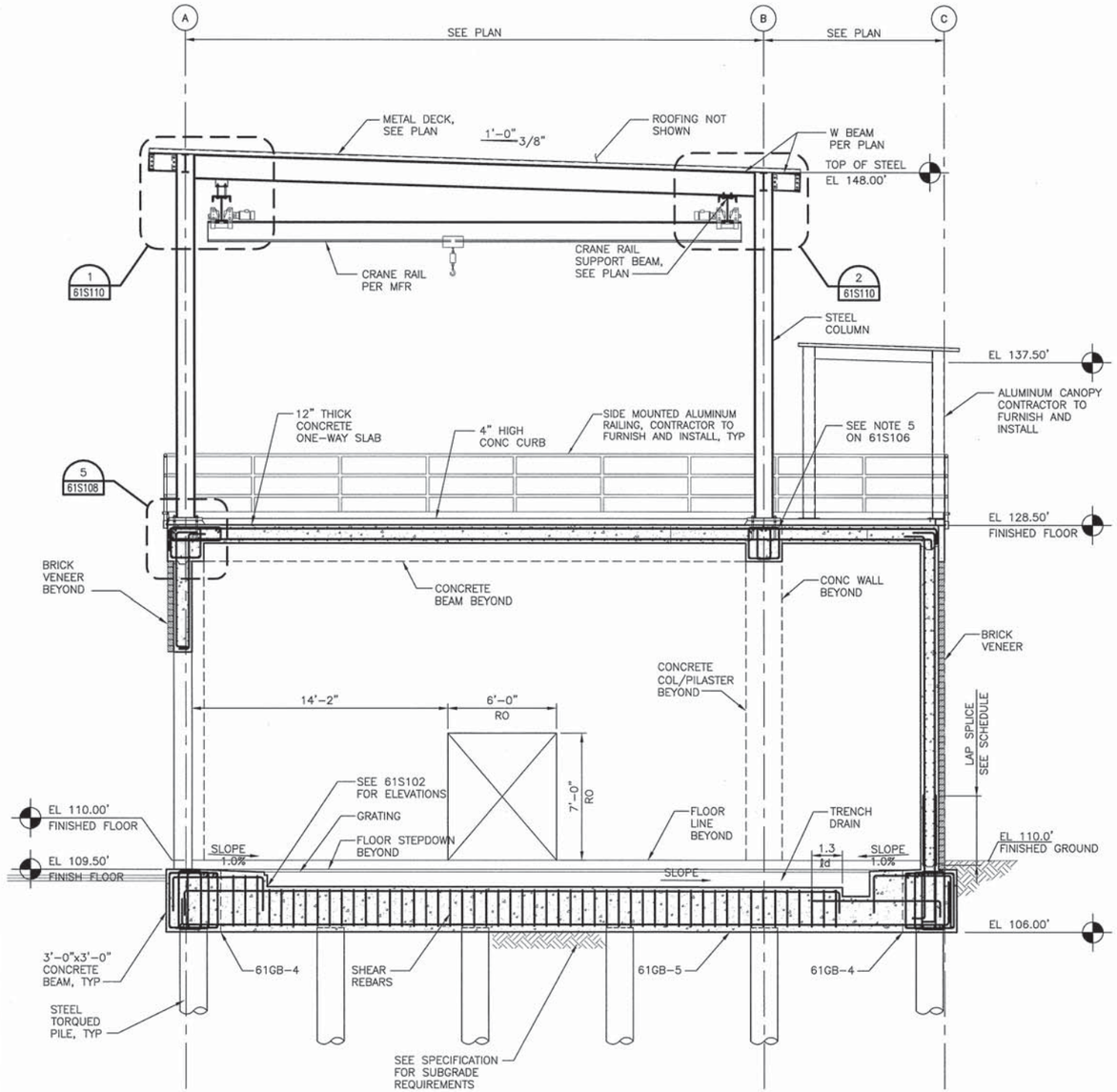

SECTION
SCALE: 1/4" = 1'-0"
B 61S101

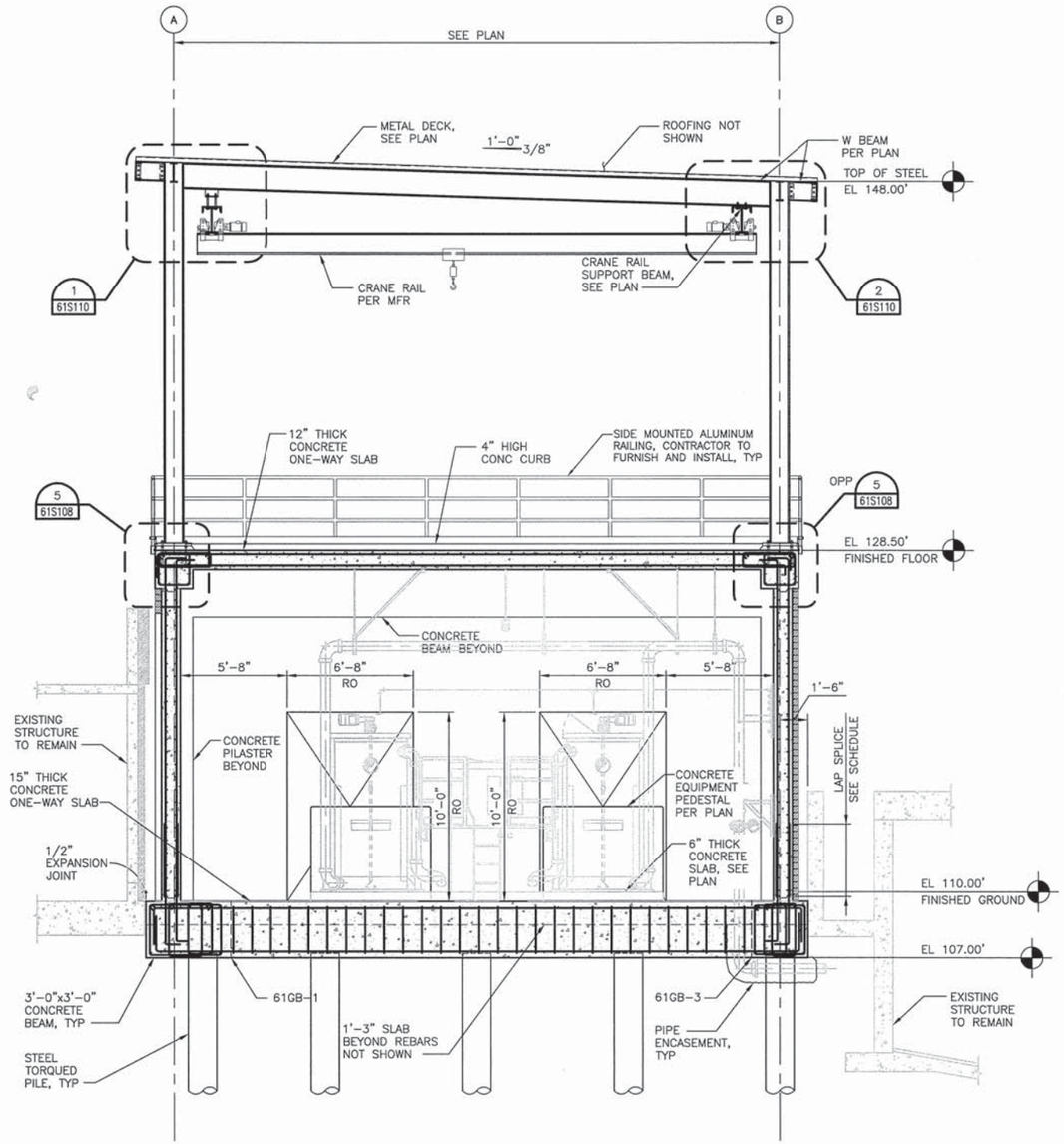

SECTION
SCALE: 1/4" = 1'-0"
C 61S101

FILE: 215786-61S107.dwg
DATE: Jun 30, 2015-8:44:03am, jwebb

HDR
HDR Engineering, Inc.

ISSUE	DATE	DESCRIPTION
A	JUNE 2015	ISSUED FOR BID

PROJECT MANAGER	C. OLSON
DESIGNED	M. MOSTAFA
DESIGNED	
CHECKED	O. TAVANGAR
DRAWN	D. ELDREDGE
DATE	JUNE 30, 2015
PROJECT NUMBER	215786

REGISTERED PROFESSIONAL ENGINEER MOHAMMADREZA MOSTAFA NO. 78649 EXP. 09/30/15 CIVIL STATE OF CALIFORNIA 06/30/15

CITY OF PINOLE CALIFORNIA 1903

PINOLE/HERCULES
WATER POLLUTION
CONTROL PLANT UPGRADE
CLIENT PN

STRUCTURAL

SOLIDS HANDLING BUILDING
BUILDING SECTION C

0 1" 2"

FILENAME	215786-61S107
SCALE	AS NOTED

SHEET
61S107

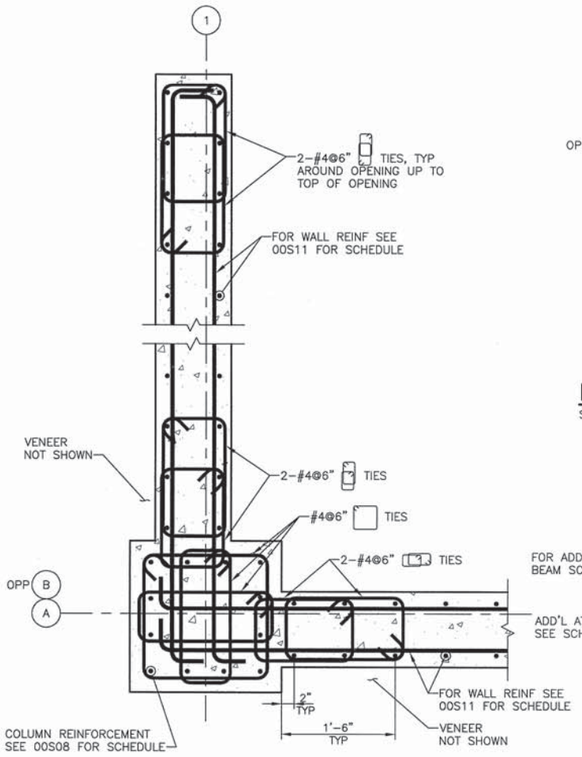

MIDDLE COLUMN DETAIL

SCALE: 1"=1'-0"

2 / 61S102

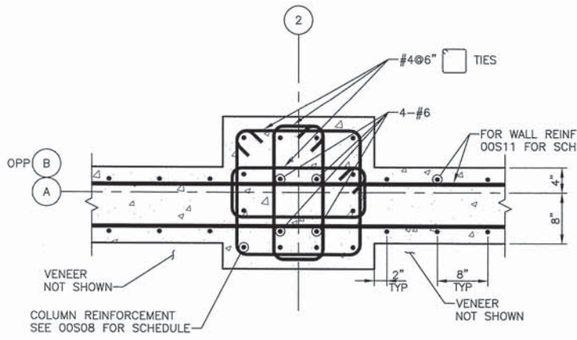

INTERSECTING WALLS @ COLUMN DETAIL

SCALE: 1"=1'-0"

3 / 61S102

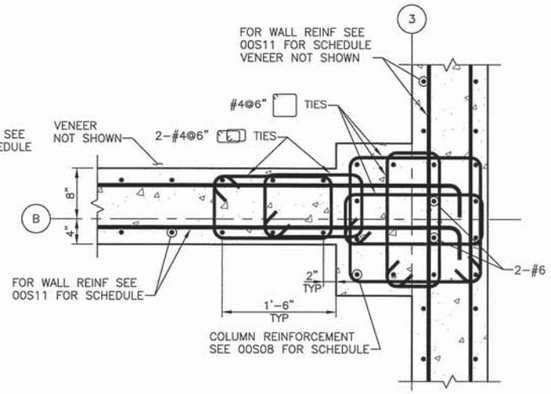

WALL AT OPENING DETAIL

SCALE: 1"=1'-0"

4 / 61S102

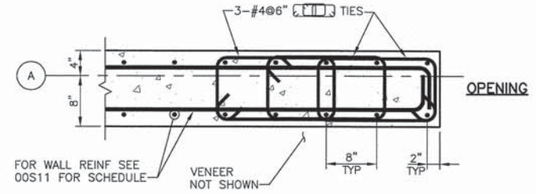

CORNER COLUMN DETAIL

SCALE: 1"=1'-0"

1 / 61S102

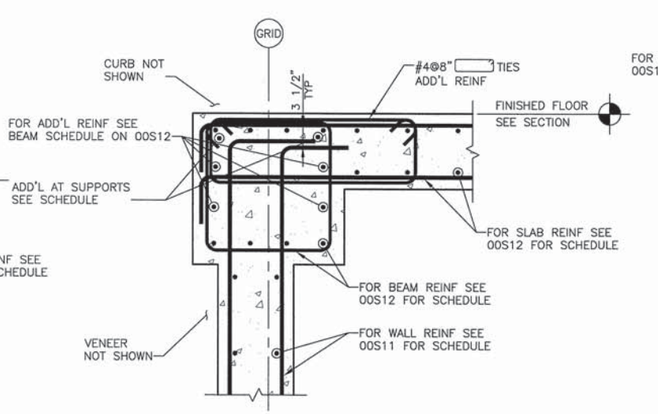

PERIMETER BEAM DETAIL

SCALE: 1"=1'-0"

5 / 61S103

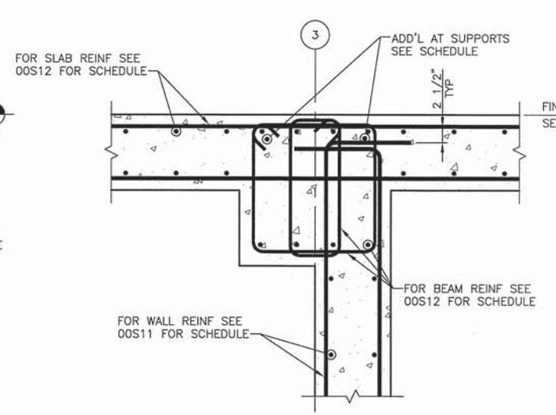

INTERIOR BEAM DETAIL

SCALE: 1"=1'-0"

6 / 61S103

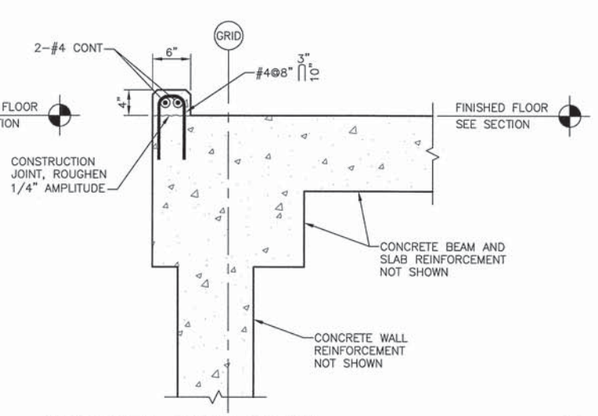

CONCRETE CURB DETAIL

SCALE: 1"=1'-0"

7 / 61S103

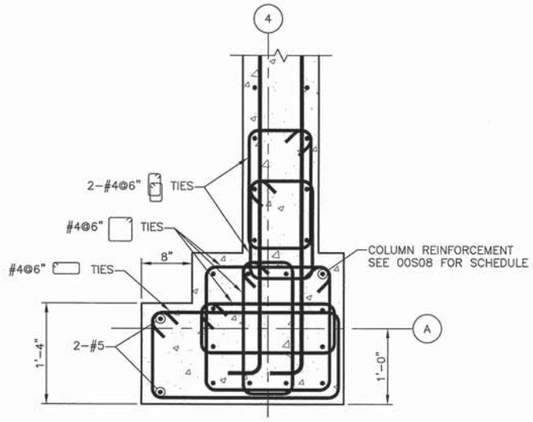

CORNER COLUMN DETAIL

SCALE: 1"=1'-0"

8 / 61S102

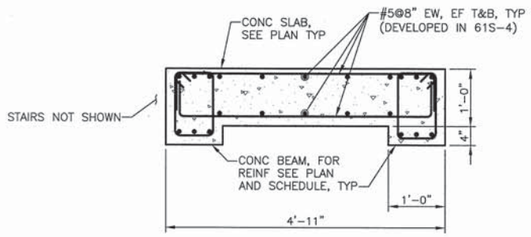

DETAIL AT STAIR LANDING

SCALE: 3/4"=1'-0"

9 / 61S103

NOT FOR CONSTRUCTION

FILE: 215786-61S108.dwg
DATE: Jun 30, 2015-8:44:11am, jwebb

HDR Engineering, Inc.

ISSUE	DATE	DESCRIPTION
A	JUNE 2015	ISSUED FOR BID

PROJECT MANAGER	C. OLSON
DESIGNED	M. MOSTAFA
DESIGNED	
CHECKED	O. TAVANGAR
DRAWN	D. ELDREDGE
DATE	JUNE 30, 2015
PROJECT NUMBER	215786

REGISTERED PROFESSIONAL ENGINEER MOHAMMADREZA MOSTAFA NO. 78649 EXP. 09/30/15 CIVIL STATE OF CALIFORNIA
06/30/15

CITY OF PINOLE CALIFORNIA 1903

PINOLE/HERCULES
WATER POLLUTION
CONTROL PLANT UPGRADE
CLIENT PN

STRUCTURAL

SOLIDS HANDLING BUILDING DETAILS - I

0 1" 2"

FILENAME	215786-61S108
SCALE	AS NOTED

SHEET 61S108

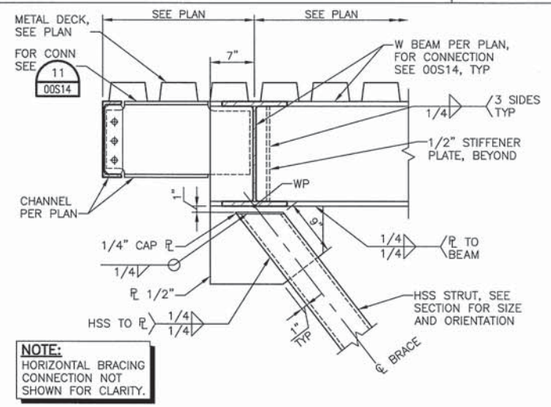

STRUT TO BEAM CONN DETAIL

1 61S106

SCALE: 1"=1'-0"

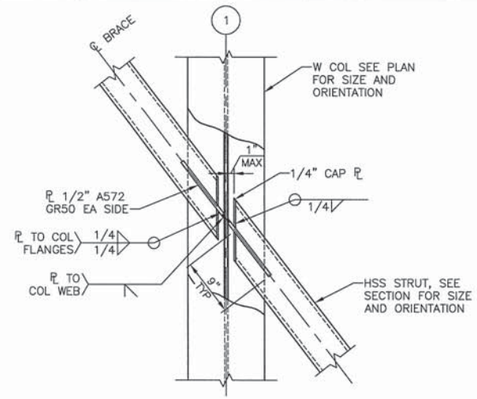

STRUT TO COL CONN DETAIL

2 61S106

SCALE: 1"=1'-0"

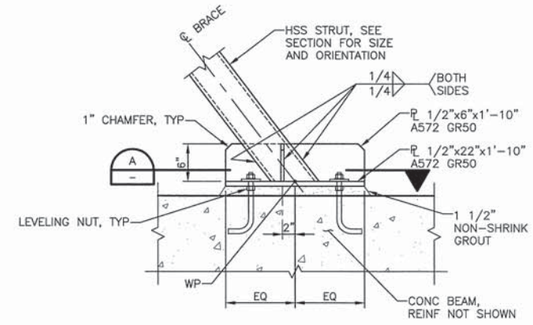

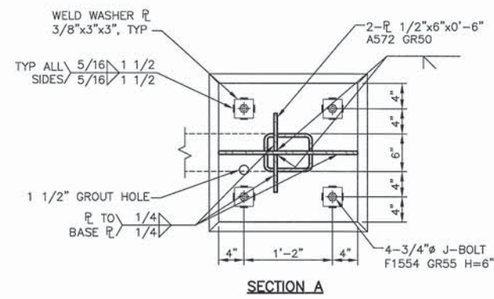

SECTION A

HSS STRUT TO BASE PLATE CONN DETAIL

3 61S106

SCALE: 1"=1'-0"

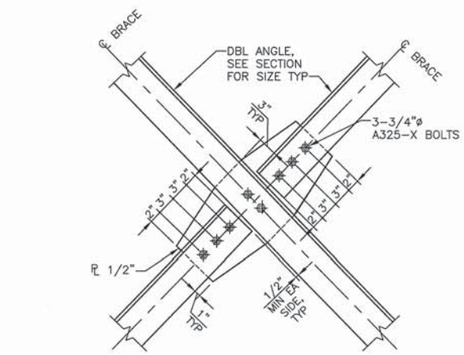

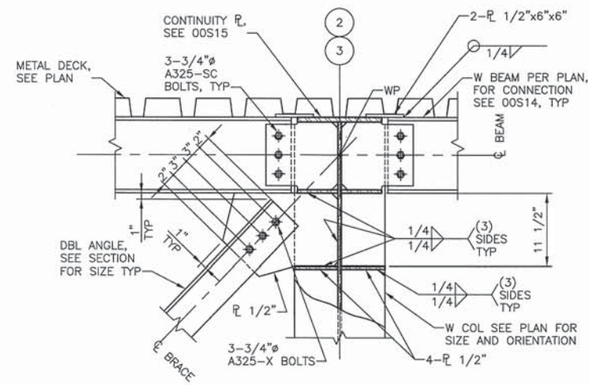

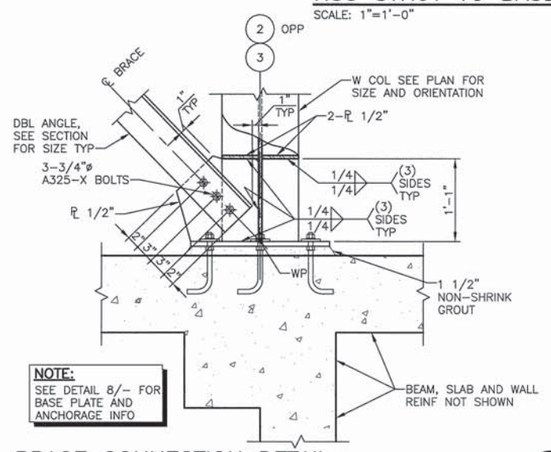

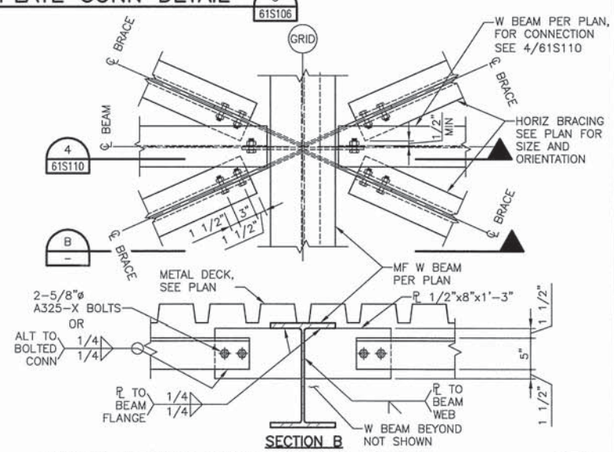

SECTION B

BRACE CONNECTION DETAIL

4 61S106

SCALE: 1"=1'-0"

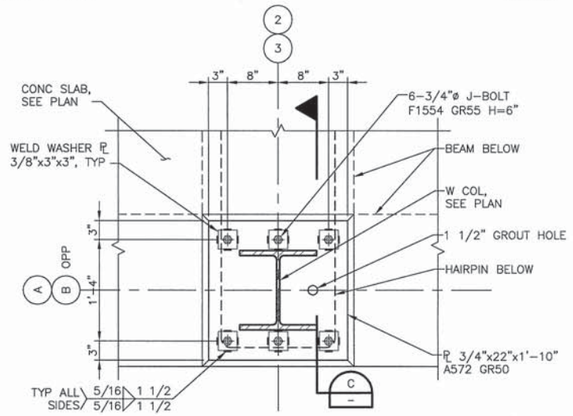

BRACE CONNECTION DETAIL

5 61S106

SCALE: 1"=1'-0"

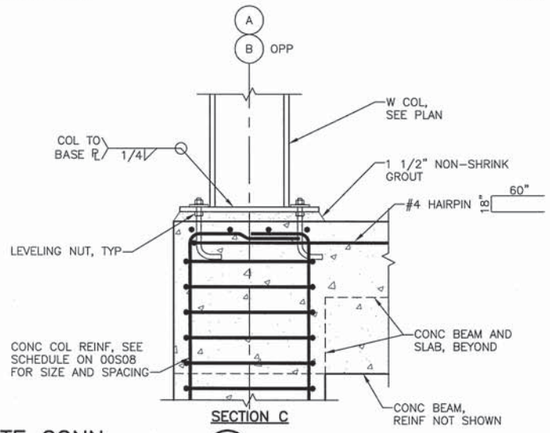

BRACE CONNECTION DETAIL

6 61S106

SCALE: 1"=1'-0"

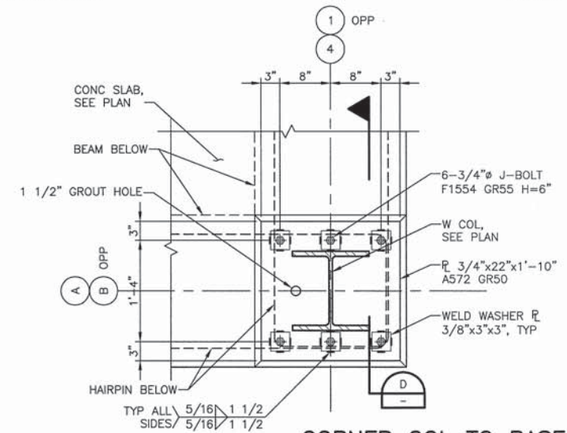

HORIZ BRACE CONNECTION DETAIL

7 61S104

SCALE: 1"=1'-0"

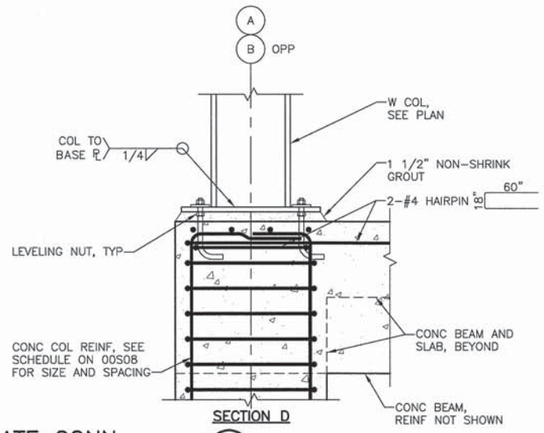

MIDDLE COL TO BASE PLATE CONN

8 61S103

SCALE: 1"=1'-0"

CORNER COL TO BASE PLATE CONN

9 61S103

SCALE: 1"=1'-0"

NOT FOR CONSTRUCTION

FILE: 61S109.dwg
DATE: Jun 30, 2015—8:45:16am, jwebb

HDR

HDR Engineering, Inc.

ISSUE	DATE	DESCRIPTION
A	JUNE 2015	ISSUED FOR BID

PROJECT MANAGER	C. OLSON
DESIGNED	M. MOSTAFA
DESIGNED	
CHECKED	O. TAVANGAR
DRAWN	D. ELDREDGE
DATE	JUNE 30, 2015
PROJECT NUMBER	215786

REGISTERED PROFESSIONAL ENGINEER MOHAMMADREZA MOSTAFA NO. 78649 EXP. 09/30/15 CIVIL STATE OF CALIFORNIA 06/30/15

CITY OF PINOLE CALIFORNIA 1903

PINOLE/HERCULES
WATER POLLUTION
CONTROL PLANT UPGRADE
CLIENT PN

STRUCTURAL

SOLIDS HANDLING BUILDING DETAILS - II

0 1" 2"

FILENAME	61S109
SCALE	AS NOTED

SHEET 61S109

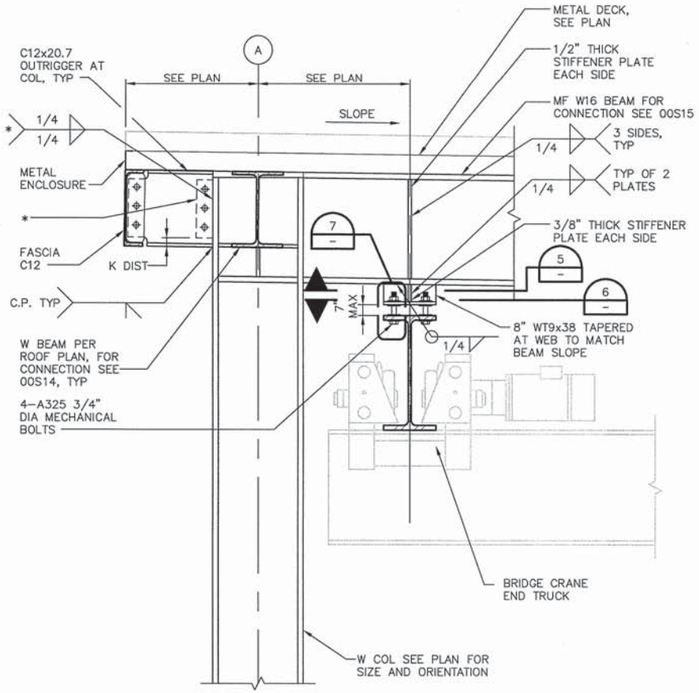

NOTES:
1. * SHEAR PLATE AND BOLTS CAN BE REPLACED WITH WEB DIRECTLY WELDED TO COL FLANGE.
2. SEE PLAN FOR BEAM SIZES, TYPICAL.

DETAIL 1/61S107
SCALE: 1"=1'-0"

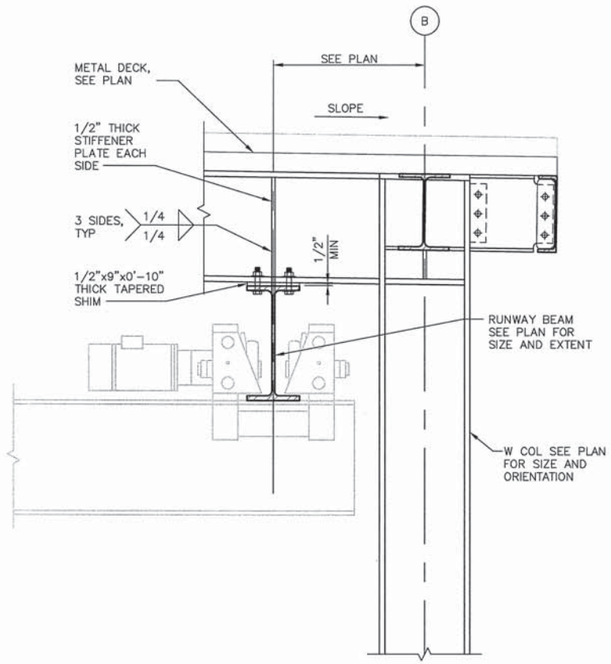

NOTE:
SEE PLAN FOR BEAM SIZES, TYPICAL.

DETAIL 2/61S107
SCALE: 1"=1'-0"

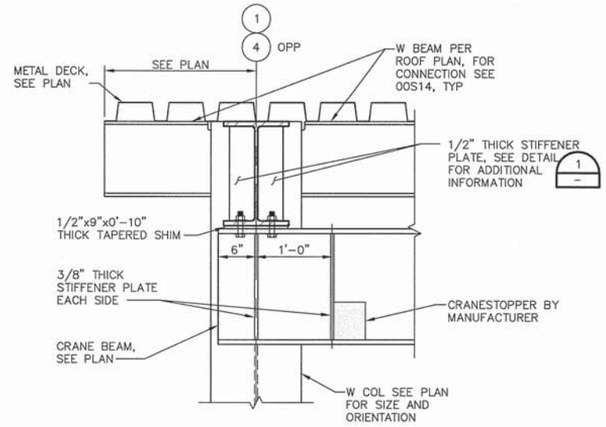

DETAIL 3/61S104
SCALE: 1"=1'-0"

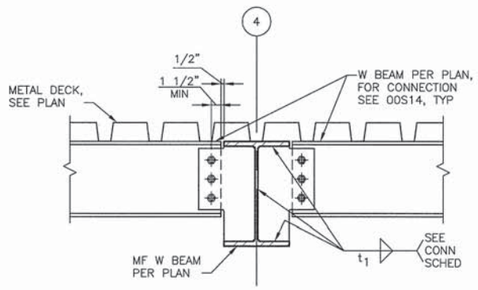

BEAM TO GIRDER CONN @ HORIZ BRACE 4/61S104
SCALE: 1"=1'-0"

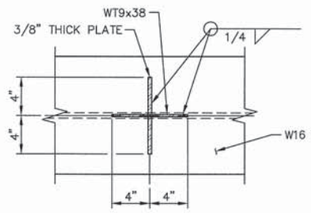

DETAIL 5/-
SCALE: 1 1/2"=1'-0"

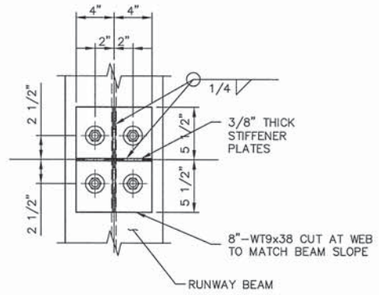

DETAIL 6/-
SCALE: 1 1/2"=1'-0"

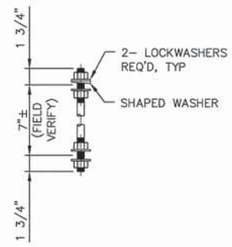

DETAIL 7/-
SCALE: 1 1/2"=1'-0"

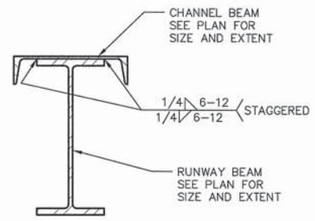

DETAIL 8/61S104
SCALE: 1 1/2"=1'-0"

NOT FOR CONSTRUCTION

FILE: 215786-61S110.dwg
DATE: Jun 30, 2015-8:44:20am, jwebb

HDR Engineering, Inc.

ISSUE	DATE	DESCRIPTION
A	JUNE 2015	ISSUED FOR BID

PROJECT MANAGER	C. OLSON
DESIGNED	M. MOSTAFA
DESIGNED	
CHECKED	O. TAVANGAR
DRAWN	D. ELDREDGE
DATE	JUNE 30, 2015
PROJECT NUMBER	215786

REGISTERED PROFESSIONAL ENGINEER
MOHAMMADREZA MOSTAFA
NO. 78649
EXP. 09/30/15
CIVIL
STATE OF CALIFORNIA
06/30/15

CITY OF PINOLE CALIFORNIA
1903

PINOLE/HERCULES
WATER POLLUTION
CONTROL PLANT UPGRADE
CLIENT PN

STRUCTURAL

SOLIDS HANDLING BUILDING DETAILS - III

0 1" 2"

FILENAME	215786-61S110
SCALE	AS NOTED

SHEET **61S110**

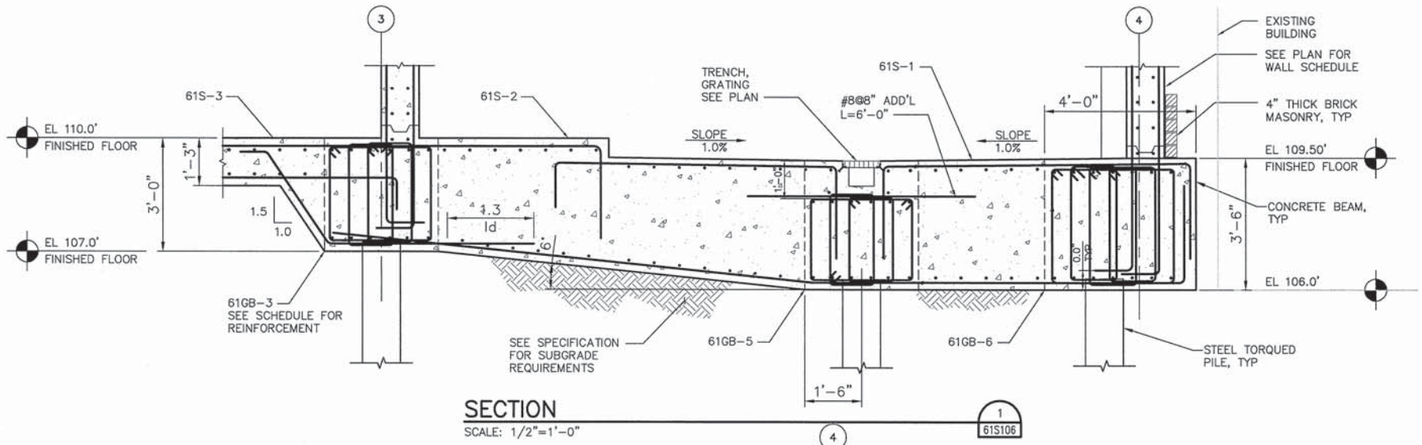

SECTION
SCALE: 1/2"=1'-0"
1 / 61S106

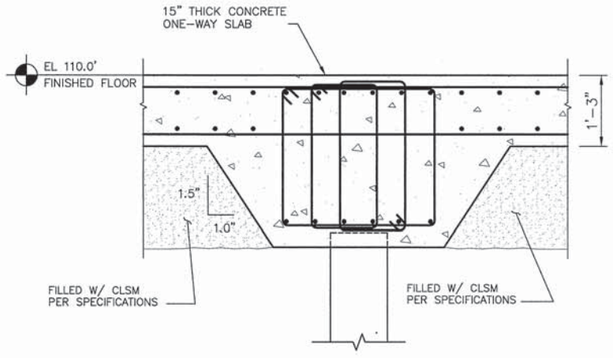

SECTION
SCALE: 3/4"=1'-0"
2 / 61S106

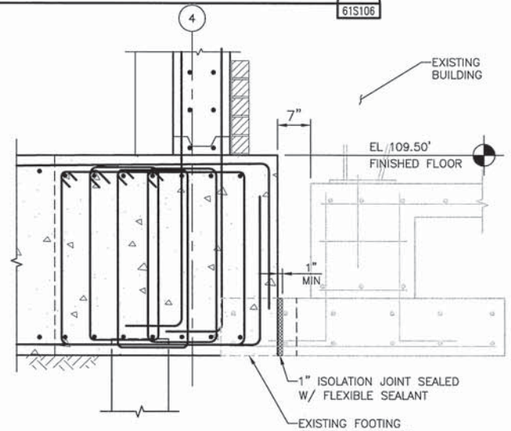

SECTION
SCALE: 3/4"=1'-0"
3 / 61S102

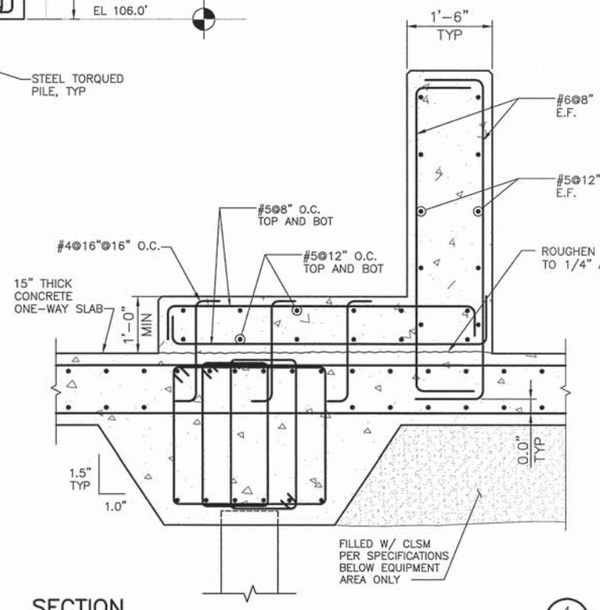

SECTION
SCALE: 3/4"=1'-0"
4 / 61S106

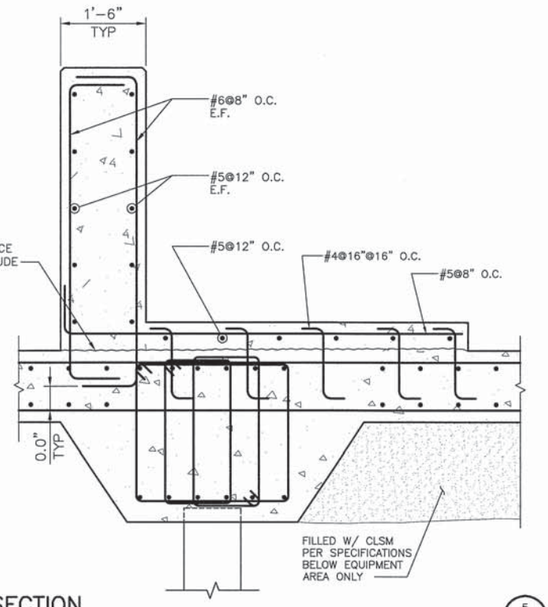

SECTION
SCALE: 3/4"=1'-0"
5 / 61S106

FILE: 61S111 .dwg
DATE: Jun 30, 2015—8:45:24am, jwebb

NOT FOR CONSTRUCTION

HDR
HDR Engineering, Inc.

ISSUE	DATE	DESCRIPTION
A	JUNE 2015	ISSUED FOR BID

PROJECT MANAGER	C. OLSON
DESIGNED	M. MOSTAFA
DESIGNED	
CHECKED	O. TAVANGAR
DRAWN	D. ELDREDGE
DATE	JUNE 30, 2015
PROJECT NUMBER	215786

REGISTERED PROFESSIONAL ENGINEER MOHAMMADREZA MOSTAFA NO. 78649 EXP. 09/30/15 CIVIL STATE OF CALIFORNIA
06/30/15

CITY OF PINOLE CALIFORNIA 1903

PINOLE/HERCULES
WATER POLLUTION
CONTROL PLANT UPGRADE
CLIENT PN

STRUCTURAL

SOLIDS HANDLING BUILDING SECTIONS AND DETAILS - III

0 1" 2"

FILENAME	61S111
SCALE	AS NOTED

SHEET
61S111

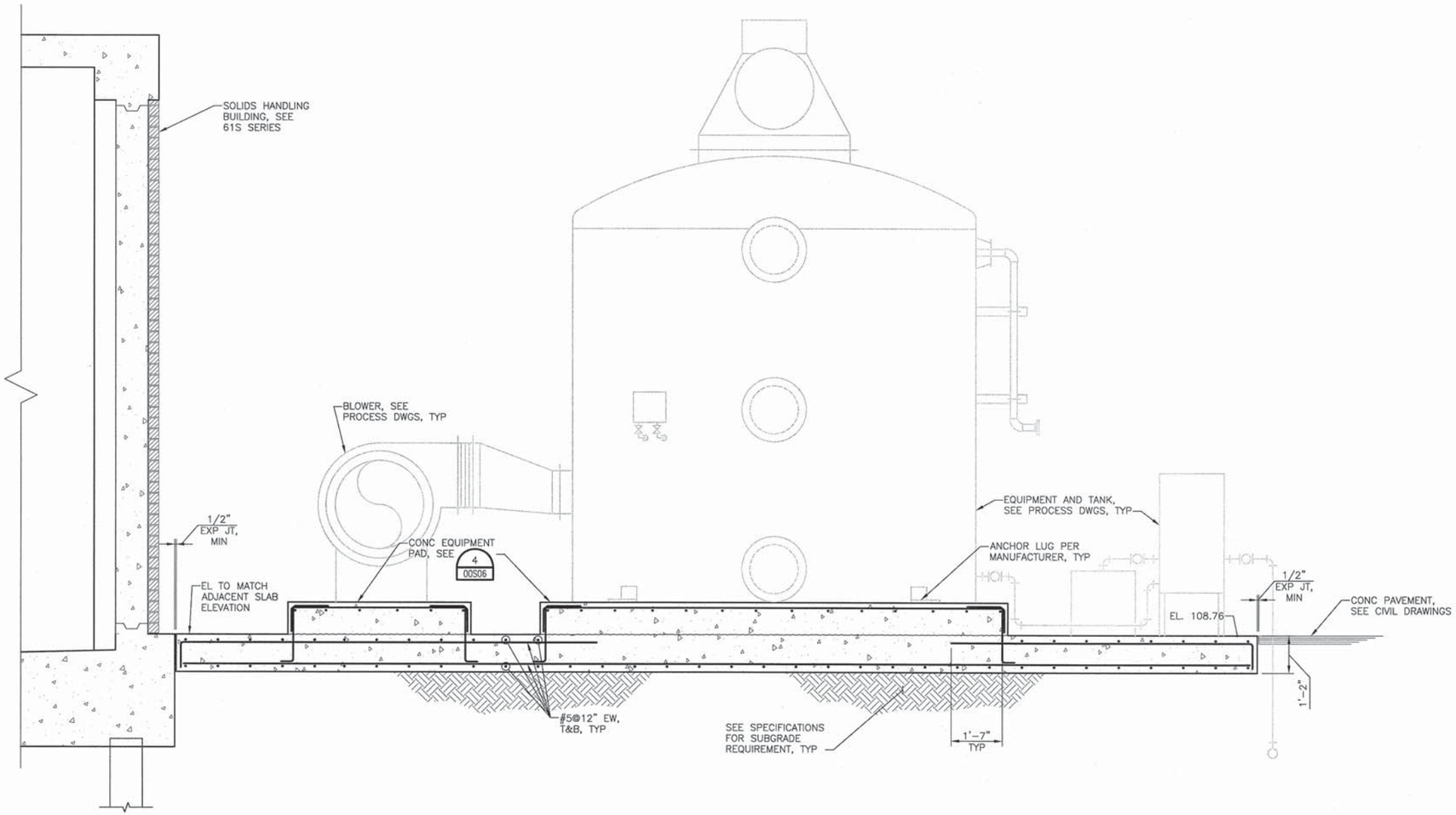

ODOR CONTROL PAD SECTION

SCALE: 1/2"=1'-0"

B 64S102

FILE: 63S101.dwg
DATE: Jun 29, 2015 - 8:58:03pm, zhli

HDR Engineering, Inc.

ISSUE	DATE	DESCRIPTION
A	JUNE 2015	ISSUED FOR BID

PROJECT MANAGER	C. OLSON
DESIGNED	Z. LI
DESIGNED	
CHECKED	O. TAVANGAR
DRAWN	D. ELDREDGE
DATE	JUNE 30, 2015
PROJECT NUMBER	215786

REGISTERED PROFESSIONAL ENGINEER
ZHEN LI
NO. 74809
EXP. 12/31/15
6/30/2015
CIVIL
STATE OF CALIFORNIA

CITY OF PINOLE CALIFORNIA 1903

PINOLE/HERCULES
WATER POLLUTION
CONTROL PLANT UPGRADE
CLIENT PN

STRUCTURAL
ODOR CONTROL PAD
SECTION

0 1" 2"

FILENAME	63S101
SCALE	AS NOTED

SHEET
63S101

NOTES:

1. FOR GENERAL NOTES, SEE SHEET 00S01 AND 00S02.
2. FOR SPECIAL INSPECTION REQUIREMENTS, SEE 00S03 AND 00S04.
3. FOR TYPICAL CONCRETE DETAILS, SEE SHEETS 00S05 THRU 00S08.
4. FOR TYPICAL REINFORCING DETAILS, SEE 00S09.
5. COORDINATE PIPING LOCATION, ORIENTATION, ELEVATIONS, AND CONCRETE PENETRATIONS WITH PROCESS/MECHANICAL DRAWINGS.
6. REFER TO PROCESS DRAWINGS FOR LOCATIONS, AMOUNT AND DETAIL OF PRESSURE RELIEF VALVE.

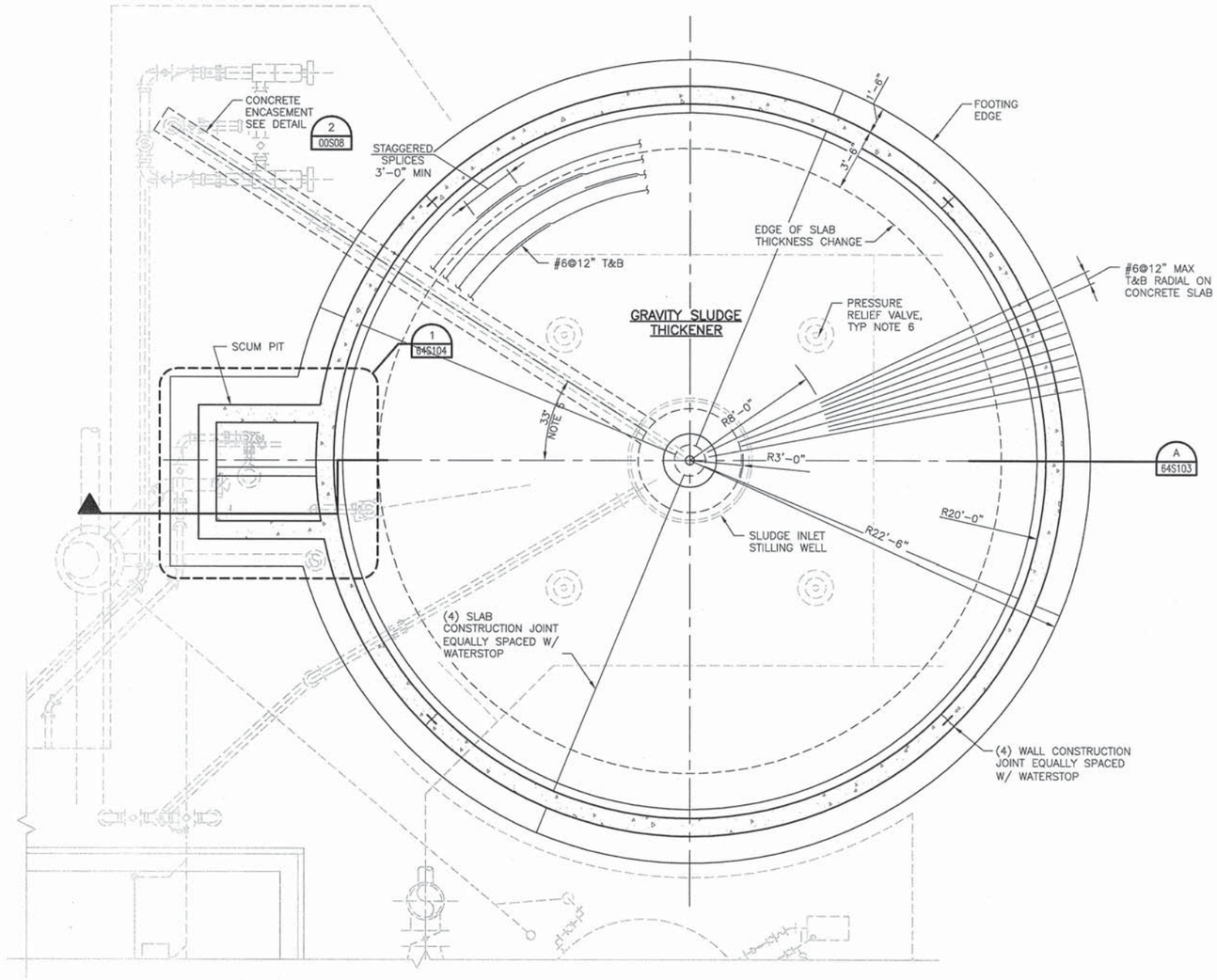

GRAVITY SLUDGE THICKENER – FOUNDATION PLAN

SCALE: 1/4" = 1'-0"

TRUE NORTH

PROJECT NORTH

FILE: 215786-64S101.dwg
DATE: Jun 29, 2015 - 3:56:26pm, jwebb

HDR Engineering, Inc.

ISSUE	DATE	DESCRIPTION
A	JUNE 2015	ISSUED FOR BID

PROJECT MANAGER	C. OLSON
DESIGNED	Z. LI
DESIGNED	
CHECKED	O. TAVANGAR
DRAWN	D. ELDREDGE
DATE	JUNE 30, 2015
PROJECT NUMBER	215786

REGISTERED PROFESSIONAL ENGINEER — ZHEN LI — NO. 74809 — EXP. 12/31/15 — CIVIL — STATE OF CALIFORNIA

CITY OF PINOLE CALIFORNIA 1903

PINOLE/HERCULES WATER POLLUTION CONTROL PLANT UPGRADE CLIENT PN

STRUCTURAL

GRAVITY SLUDGE THICKENER FOUNDATION PLAN

0 1" 2"

FILENAME	215786-64S101
SCALE	AS NOTED

SHEET **64S101**

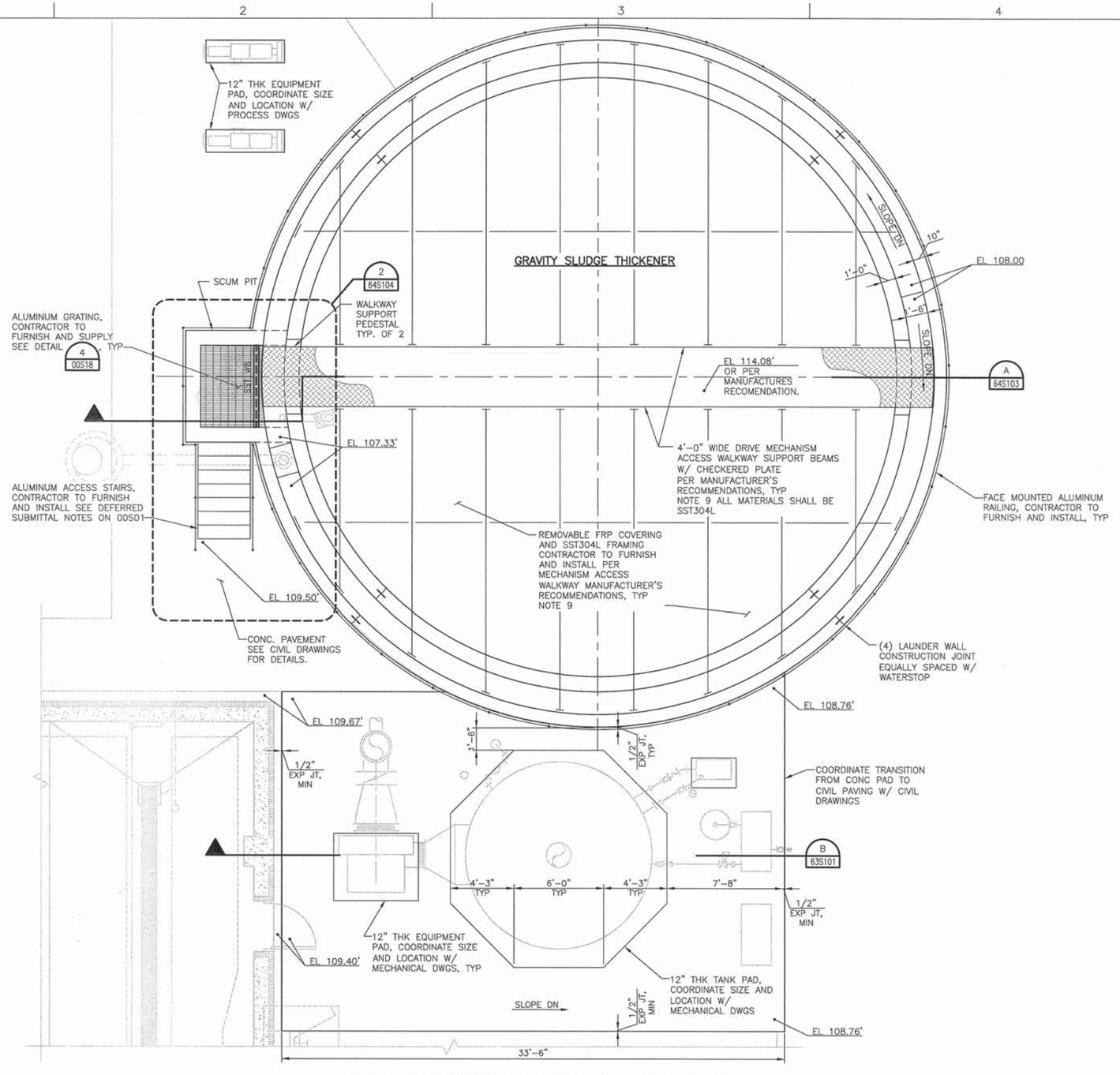

GRAVITY SLUDGE THICKENER – TOP PLAN

SCALE: 1/4" = 1'-0"

NOTES:

1. FOR GENERAL NOTES, SEE SHEET 00S01 AND 00S02.
2. FOR SPECIAL INSPECTION REQUIREMENTS, SEE 00S03 AND 00S04.
3. FOR TYPICAL CONCRETE DETAILS, SEE SHEETS 00S05 THRU 00S08.
4. FOR TYPICAL REINFORCING DETAILS, SEE 00S09.
5. COORDINATE PIPING LOCATION, ORIENTATION, ELEVATIONS, AND CONCRETE PENETRATIONS WITH PROCESS/MECHANICAL DRAWINGS.
6. FOR TYPICAL GRATING DETAILS, SEE SHEET 00S18.
7. FOR TYPICAL RAILING DETAILS, SEE SHEET 00S19 AND 00S20.
8. EL XX.XX' DENOTES TOP OF CONCRETE ELEVATION.
9. CONTRACTOR SHALL DESIGN WALKWAY, FRP COVERING, AND THEIR FRAMING, SUPPORTS PER DEFERRED APPROVAL NOTES IN SHEET 00S01.

TRUE NORTH

PROJECT NORTH

FILE: 215786-64S102.dwg
DATE: Jun 29, 2015 - 3:58:31pm, jwebb

HDR Engineering, Inc.

ISSUE	DATE	DESCRIPTION
A	JUNE 2015	ISSUED FOR BID

PROJECT MANAGER	C. OLSON
DESIGNED	Z. LI
DESIGNED	
CHECKED	O. TAVANGAR
DRAWN	D. ELDREDGE
DATE	JUNE 30, 2015
PROJECT NUMBER	215786

REGISTERED PROFESSIONAL ENGINEER — ZHEN LI — NO. 74809 — EXP. 12/31/15 — CIVIL — STATE OF CALIFORNIA

CITY OF PINOLE CALIFORNIA 1903

PINOLE/HERCULES WATER POLLUTION CONTROL PLANT UPGRADE CLIENT PN

STRUCTURAL

GRAVITY SLUDGE THICKENER TOP PLAN

0 1" 2"

FILENAME	215786-64S102
SCALE	AS NOTED

SHEET **64S102**

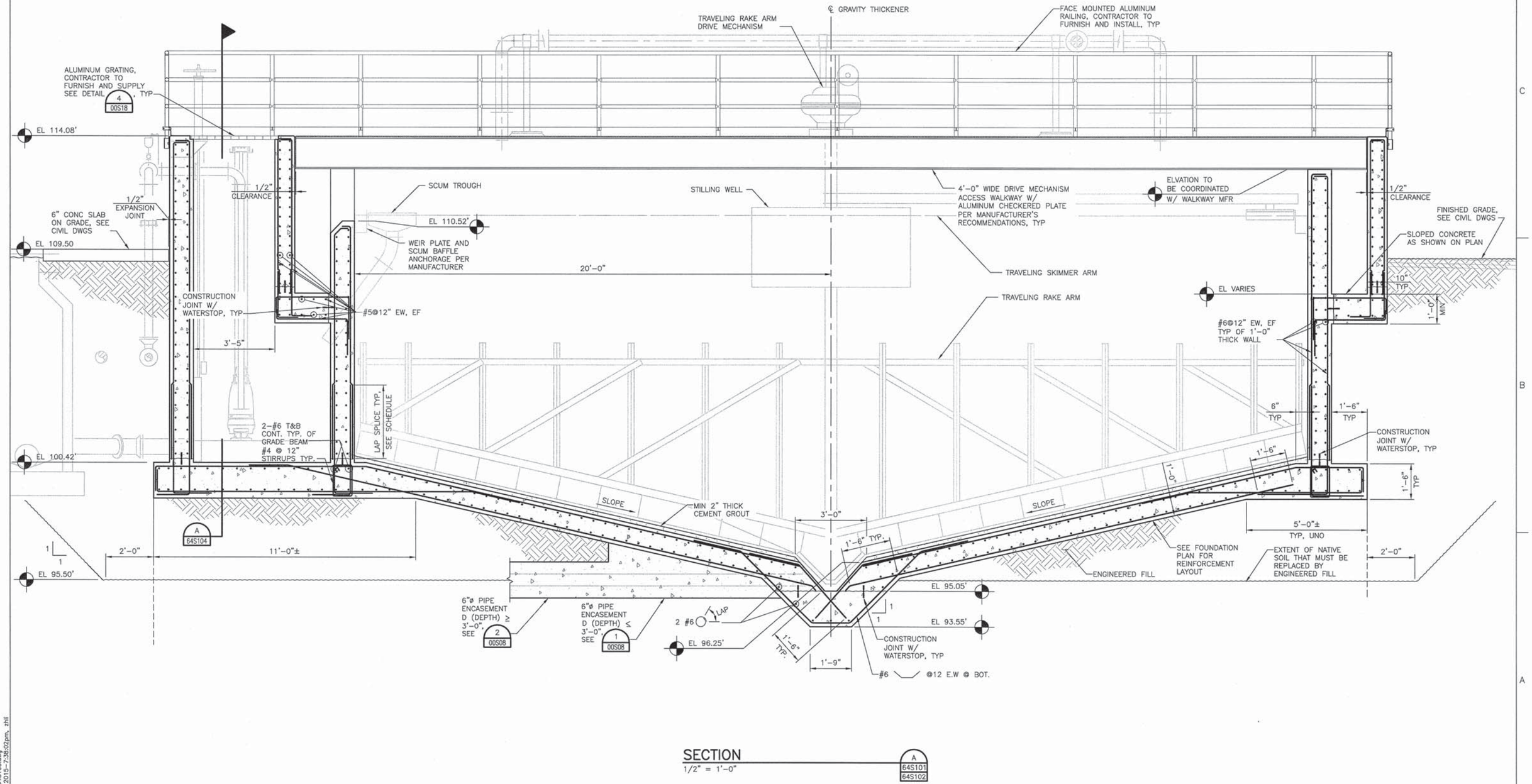

SECTION

1/2" = 1'-0"

A 64S101 64S102

FILE: 215786-64S103.dwg
DATE: Jun 29, 2015-7:38:02pm, zhli

HDR Engineering, Inc.

ISSUE	DATE	DESCRIPTION
A	JUNE 2015	ISSUED FOR BID

PROJECT MANAGER	C. OLSON
DESIGNED	Z. LI
DESIGNED	
CHECKED	O. TAVANGAR
DRAWN	D. ELDREDGE
DATE	JUNE 30, 2015
PROJECT NUMBER	215786

REGISTERED PROFESSIONAL ENGINEER
ZHEN LI
NO. 74809
EXP. 12/31/15
CIVIL
STATE OF CALIFORNIA

CITY OF PINOLE CALIFORNIA 1903

PINOLE/HERCULES
WATER POLLUTION
CONTROL PLANT UPGRADE
CLIENT PN

STRUCTURAL

GRAVITY SLUDGE THICKENER SECTION

0 1" 2"

FILENAME	215786-64S103
SCALE	AS NOTED

SHEET **64S103**

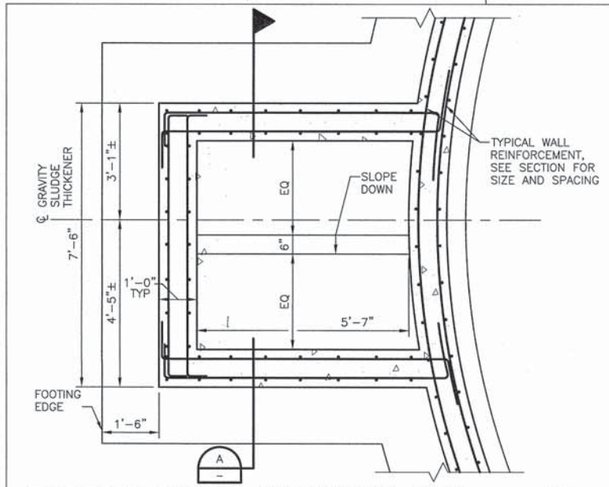

ENLARGED PARTIAL FOUNDATION PLAN

SCALE: 1/2"=1'-0"

1 / 64S101

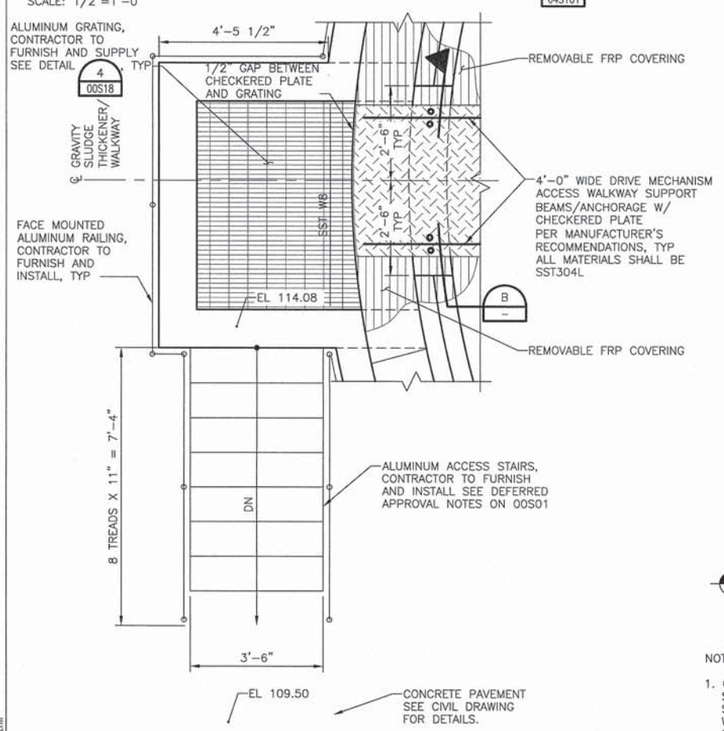

ENLARGED PARTIAL TOP PLAN

SCALE: 1/2"=1'-0"

2 / 64S102

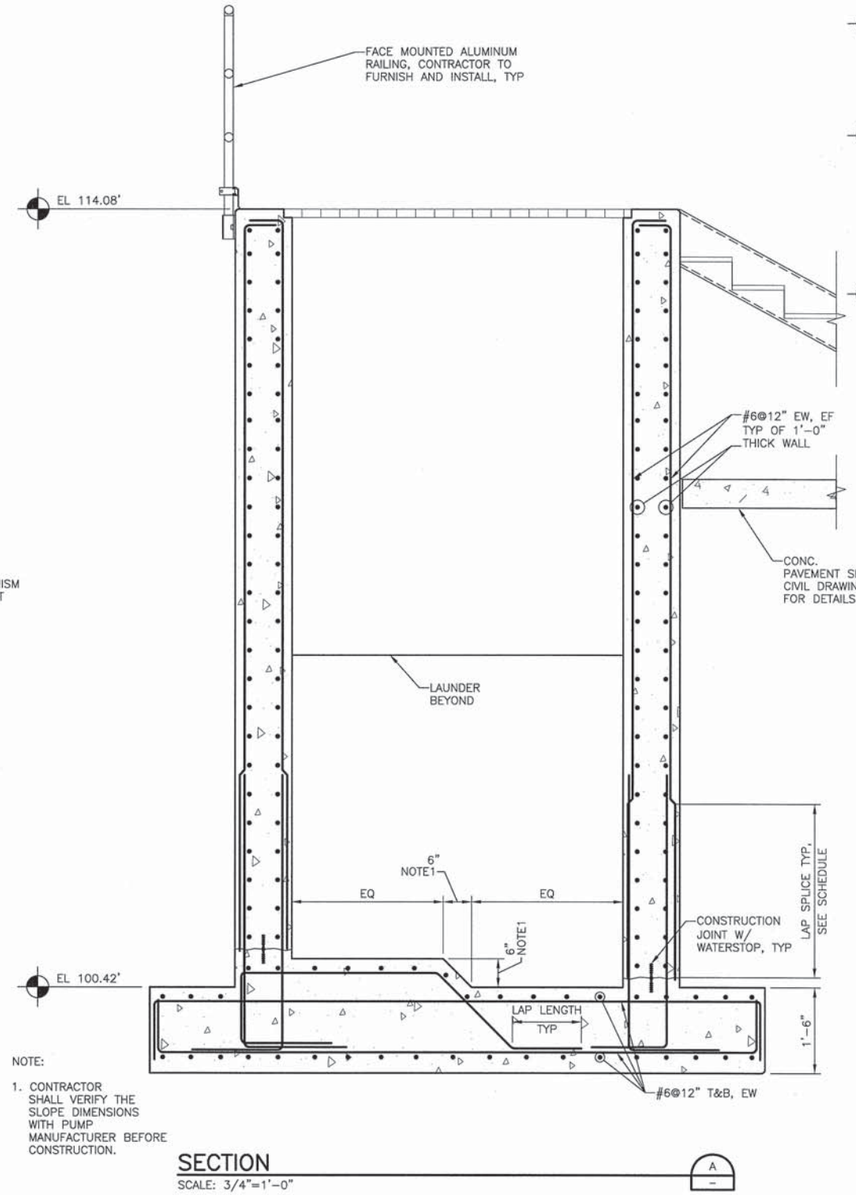

SECTION

SCALE: 3/4"=1'-0"

A

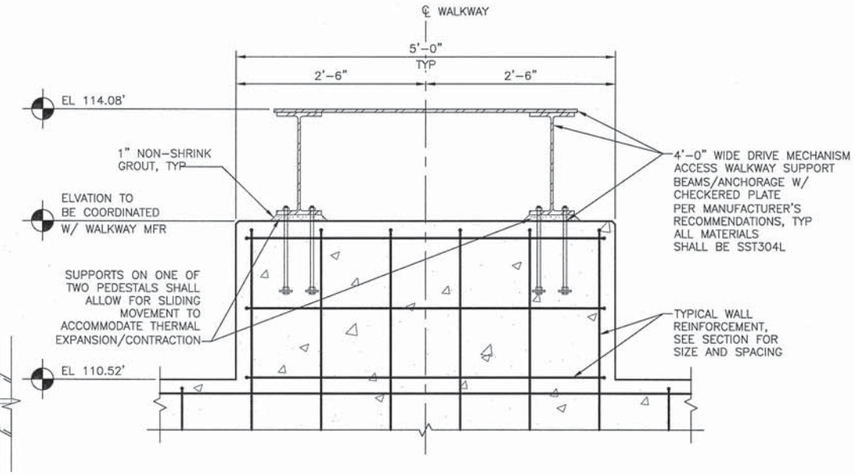

SECTION

SCALE: 1"=1'-0"

B

FILE: 215786-64S104.dwg
DATE: Jun 29, 2015 - 7:32:07pm, zhli

HDR Engineering, Inc.

ISSUE	DATE	DESCRIPTION
A	JUNE 2015	ISSUED FOR BID

PROJECT MANAGER	C. OLSON
DESIGNED	Z. LI
DESIGNED	
CHECKED	C. OLSON
DRAWN	S. LARI
DATE	JUNE 30, 2015
PROJECT NUMBER	215786

REGISTERED PROFESSIONAL ENGINEER
ZHEN LI
NO. 74809
EXP. 12/31/15
6/30/2015
CIVIL
STATE OF CALIFORNIA

CITY OF PINOLE CALIFORNIA 1903

PINOLE/HERCULES
WATER POLLUTION
CONTROL PLANT UPGRADE
CLIENT PN

STRUCTURAL

GRAVITY SLUDGE THICKENER ENLARGED PLAN AND SECTIONS

0 1" 2"

FILENAME	215786-64S104
SCALE	AS NOTED

SHEET 64S104

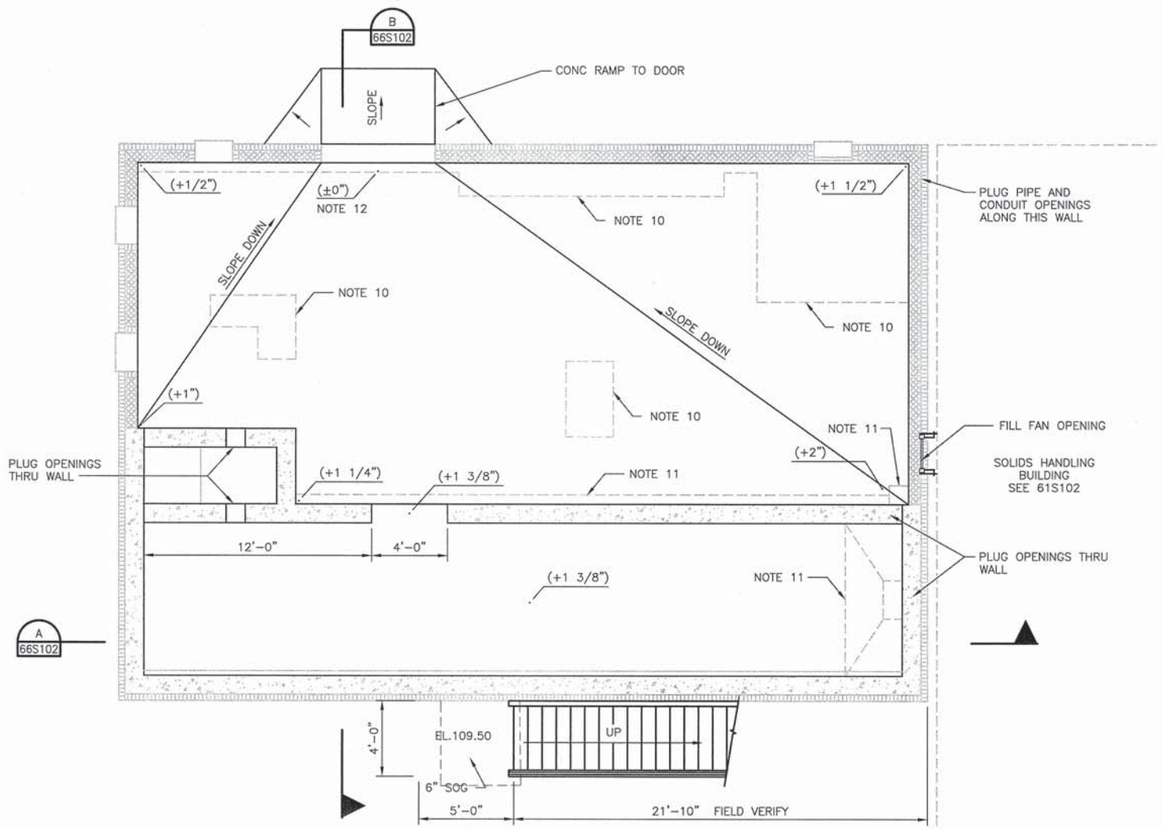

FLOOR PLAN
1/4" = 1'-0"

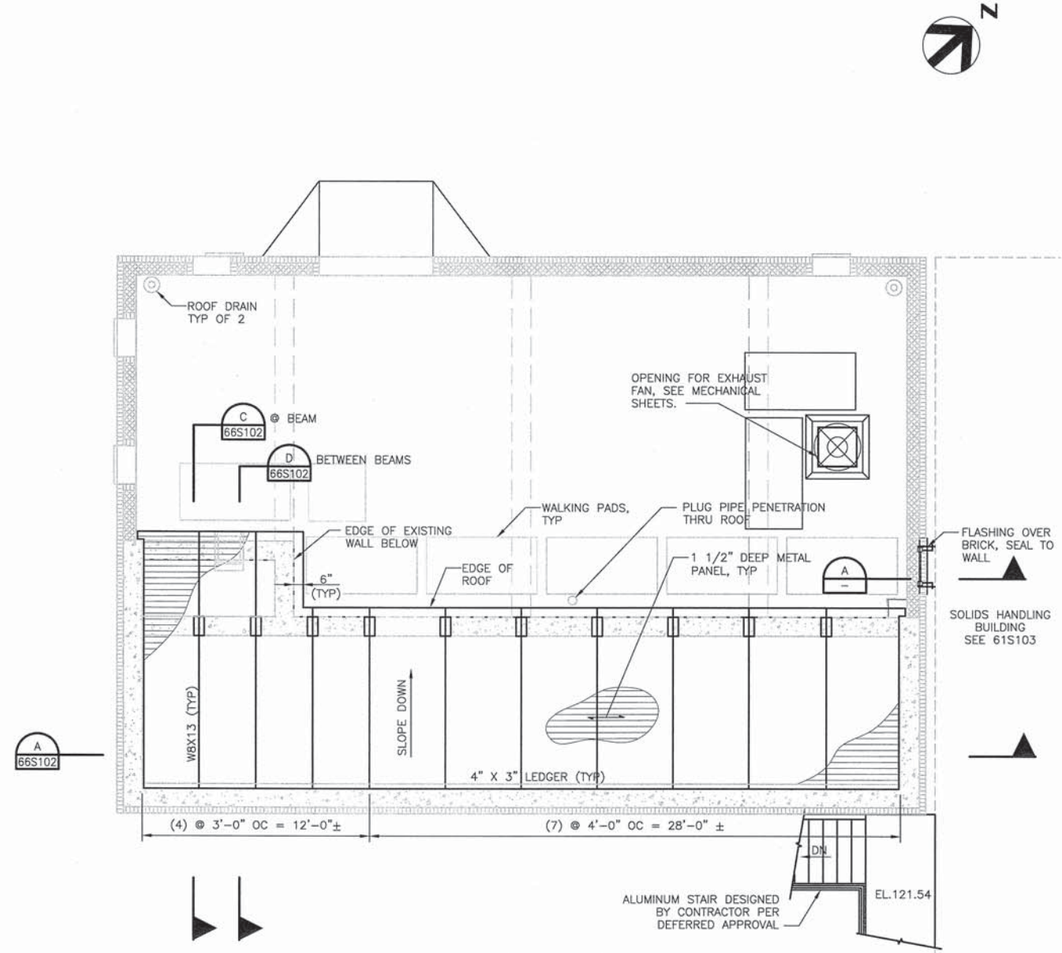

ROOF PLAN
1/4" = 1'-0"

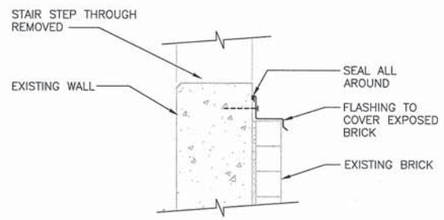

ROOF PLAN
NTS

A

NOTES:

1. FOR GENERAL NOTES, SEE SHEET 00S01 AND 00S02.
2. SEE SHEET 66D101, 66D102 FOR DEMOLITION DETAIL.
3. FOR SPECIAL INSPECTION REQUIREMENTS, SEE 00S03 AND 00S04.
4. FOR TYPICAL CONCRETE DETAILS, SEE SHEETS 00S05 THRU 00S08.
5. FOR TYPICAL REINFORCING DETAILS, SEE 00S09
6. FOR TYPICAL METAL DECK DETAILS, SEE SHEET 00S17.
7. FOR TYPICAL STEEL DETAILS, SEE SHEET 00S14 THRU 00S16.
8. DENOTES BRICK VENEER.
9. DENOTES CMU WALL
10. DEPRESSIONS AFTER DEMOLITION OF EXISTING CONCRETE PAD SHALL BE FILLED WITH CEMENT GROUT TO MEET FLOOR SLOPE REQUIREMENT.
11. EXISTING SUMPS AND TRENCHES SHALL BE FILLED WITH CONCRETE TO MEET FLOOR SLOPE REQUIREMENT.
12. CONCRETE SLABTOP ELEVATION NEXT TO ROUGHENED CURB ENTRY IS REFERENCED AS +0". OTHER POINT ELEVATIONS NOTED AS (+X") IS RELATIVE TO THIS POINT ELEVATION.

FILE: 66S101.dwg
DATE: Jun 29, 2015 - 7:27:08pm, zhli

HDR
HDR Engineering, Inc.

ISSUE	DATE	DESCRIPTION
A	JUNE 2015	ISSUED FOR BID

PROJECT MANAGER	C. OLSON
DESIGNED	Z. LI
DESIGNED	
CHECKED	C. OLSON
DRAWN	S. LARI
DATE	JUNE 30, 2015
PROJECT NUMBER	215786

REGISTERED PROFESSIONAL ENGINEER
ZHEN LI
NO. 74809
EXP. 12/31/15
6/30/2015
CIVIL
STATE OF CALIFORNIA

CITY OF PINOLE CALIFORNIA 1903

PINOLE/HERCULES
WATER POLLUTION
CONTROL PLANT UPGRADE
CLIENT PN

STRUCTURAL

MAINTENANCE SHOP
FLOOR AND ROOF PLANS

0 1" 2"

FILENAME	66S101
SCALE	AS NOTED

SHEET
66S101

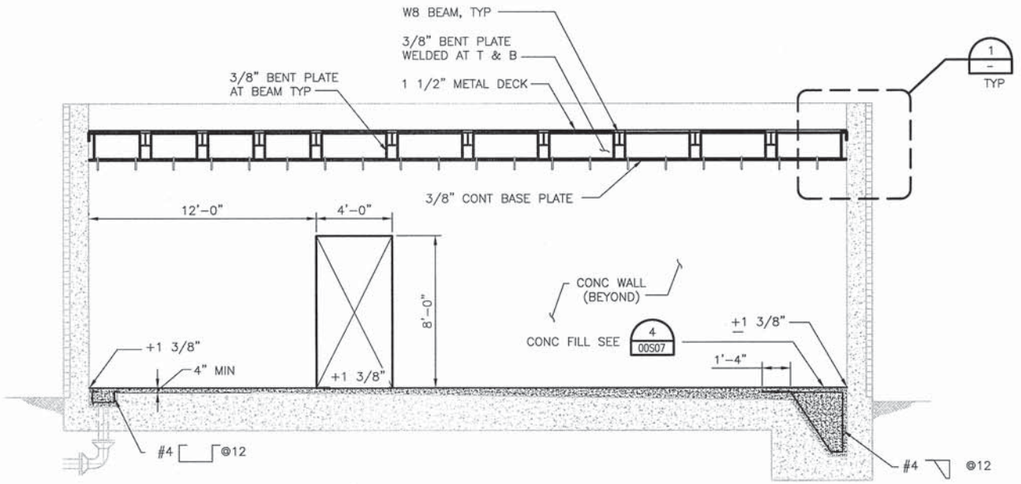

SECTION
1/4" = 1'-0"
A 66S101

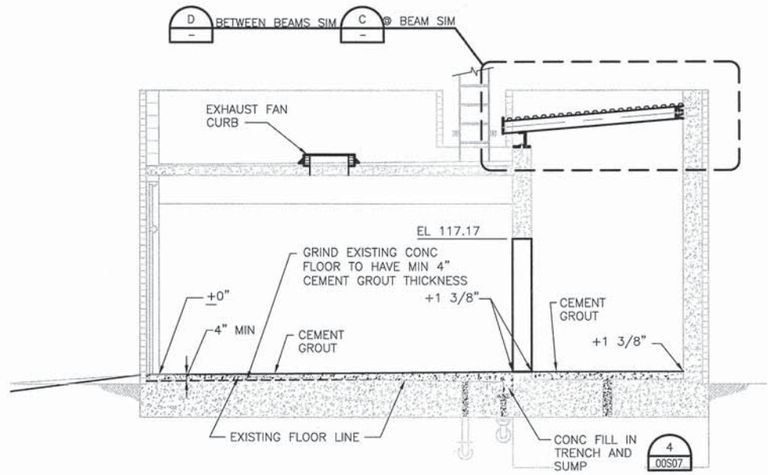

SECTION
1/4" = 1'-0"
B 66S101

NOTES:

1. FOR GENERAL NOTES, SEE SHEET 00S01 AND 00S02.
2. SEE SHEET 66D101, 66D102 FOR SITE DEMOLITION DETAIL.
3. FOR SPECIAL INSPECTION REQUIREMENTS, SEE 00S03 AND 00S04.
4. FOR TYPICAL CONCRETE DETAILS, SEE SHEETS 00S05 THRU 00S08.
5. FOR TYPICAL REINFORCING DETAILS, SEE 00S09
6. FOR TYPICAL METAL DECK DETAILS, SEE SHEET 00S17.
7. FOR TYPICAL STEEL DETAILS, SEE SHEET 00S14 THRU 00S16.
8. DENOTES BRICK VENEER.
9. DENOTES CMU WALL
10. DEPRESSIONS AFTER DEMOLITION OF EXISTING CONC PAD SHALL BE FILLED W/CEMENT GROUT TO MEET FLOOR SLOPE REQUIREMENT.
11. EXISTING SUMPS AND TRENCHES SHALL BE FILLED W/CONC TO MEET FLOOR SLOPE REQUIREMENT.
12. CONCRETE SLABTOP ELEVATION NEXT TO ROUGHENED CURB ENTRY IS REFERENCED AS ±0". OTHER POINT ELEVATIONS NOTED AS (+X") IS RELATIVE TO THIS POINT ELEVATION.

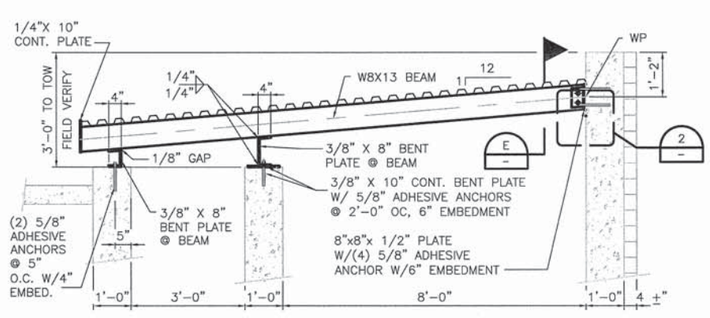

SECTION
1/2" = 1'-0"
C 66S101

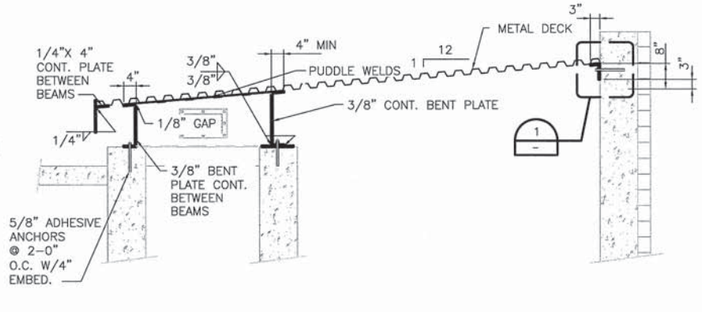

SECTION
1/2" = 1'-0"
D 66S101

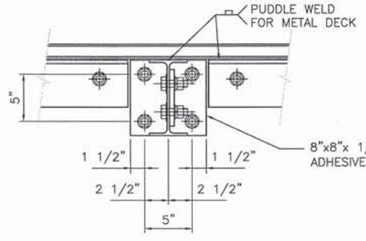

SECTION
1-1/2" = 1'-0"
E

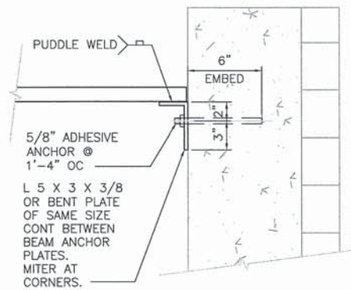

DETAIL
1-1/2" = 1'-0"
1

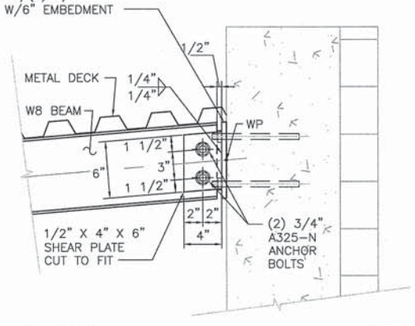

DETAIL
1-1/2" = 1'-0"
2

FILE: 66S102.dwg
DATE: Jun 29, 2015 - 6:44:01pm, zhil

HDR Engineering, Inc.

ISSUE	DATE	DESCRIPTION
A	JUNE 2015	ISSUED FOR BID

PROJECT MANAGER	C. OLSON
DESIGNED	Z. LI
DESIGNED	
CHECKED	C. OLSON
DRAWN	S.LARI
DATE	JUNE 30, 2015
PROJECT NUMBER	215786

REGISTERED PROFESSIONAL ENGINEER
ZHEN LI
NO. 74809
EXP. 12/31/15
6/30/2015
CIVIL
STATE OF CALIFORNIA

CITY OF PINOLE CALIFORNIA 1903

PINOLE/HERCULES
WATER POLLUTION
CONTROL PLANT UPGRADE
CLIENT PN

STRUCTURAL

MAINTENANCE SHOP SECTIONS AND DETAILS

0 1" 2"

FILENAME	66S102
SCALE	AS NOTED

SHEET
66S102

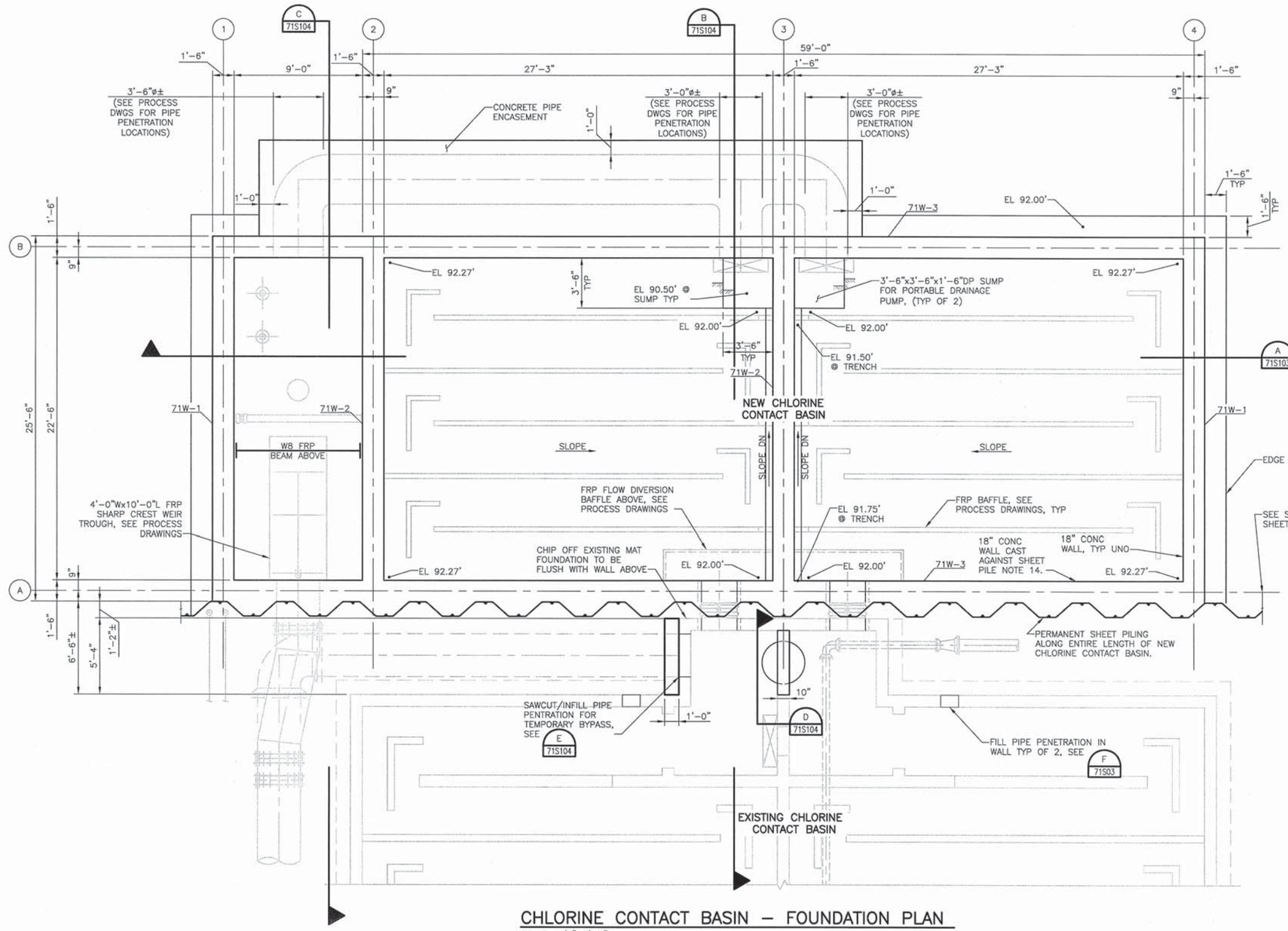

CHLORINE CONTACT BASIN – FOUNDATION PLAN

SCALE: 1/4"=1'-0"

NOTES:

1. FOR GENERAL NOTES, SEE SHEET 00S01 AND 00S02.
2. FOR SPECIAL INSPECTION REQUIREMENTS, SEE 00S03 AND 00S04.
3. FOR TYPICAL CONCRETE DETAILS, SEE SHEETS 00S05 THRU 00S08.
4. FOR TYPICAL REINFORCING DETAILS, SEE 00S09.
5. FOR TYPICAL CONCRETE BEAM, SLAB, AND WALL DETAILS AND SCHEDULES, SEE SHEETS 00S11 AND 00S12.
6. FOR TYPICAL GRATING DETAILS, SEE SHEET 00S18.
7. FOR TYPICAL RAILING DETAILS, SEE SHEET 00S19 AND 00S20.
8. "71S–X" DENOTES CONCRETE SLAB. SEE SHEET 00S05 AND 00S12 FOR DETAILS AND SCHEDULE.
9. "71B–X" DENOTES CONCRETE BEAM. SEE SHEET 00S12 FOR DETAILS AND SCHEDULE.
10. "71W–X" DENOTES CONCRETE WALL. SEE SHEET 00S11 FOR WALL REINFORCING SCHEDULE.
11. DENOTES CHANGE IN TOP OF CONCRETE ELEVATION.
12. ALL WALLS ARE CENTERED ON GRID LINES, UNLESS NOTED OTHERWISE.
13. CONTRACTOR TO DESIGN FRP BAFFLE WALLS AND THEIR SUPPORTS. SEE DEFERRED APPROVALS IN GENERAL STRUCTURAL NOTES FOR DETAILED REQUIREMENT.
14. PERMANENT SHEET PILES BY CONTRACTOR. ADJACENT CONCRETE WALL WILL BE CAST AGAINST SHEET PILE TO LEVEL OF EXISTING ADJACENT FOUNDATION.

TRUE NORTH

PROJECT NORTH

FILE: 215786–71S101.dwg
DATE: Jun 29, 2015–6:38:20pm, zhli

HDR Engineering, Inc.

ISSUE	DATE	DESCRIPTION
A	JUNE 2015	ISSUED FOR BID

PROJECT MANAGER	C. OLSON
DESIGNED	Z. LI
DESIGNED	
CHECKED	C. OLSON
DRAWN	D. ELDREDGE
DATE	JUNE 30, 2015
PROJECT NUMBER	215786

REGISTERED PROFESSIONAL ENGINEER — ZHEN LI — NO. 74809 — EXP. 12/31/15 — 6/30/2015 — CIVIL — STATE OF CALIFORNIA

CITY OF PINOLE CALIFORNIA — 1903

PINOLE/HERCULES WATER POLLUTION CONTROL PLANT UPGRADE
CLIENT PN

STRUCTURAL

CHLORINE CONTACT BASIN FOUNDATION PLAN

0 1" 2"

FILENAME	215786–71S101
SCALE	AS NOTED

SHEET 71S101

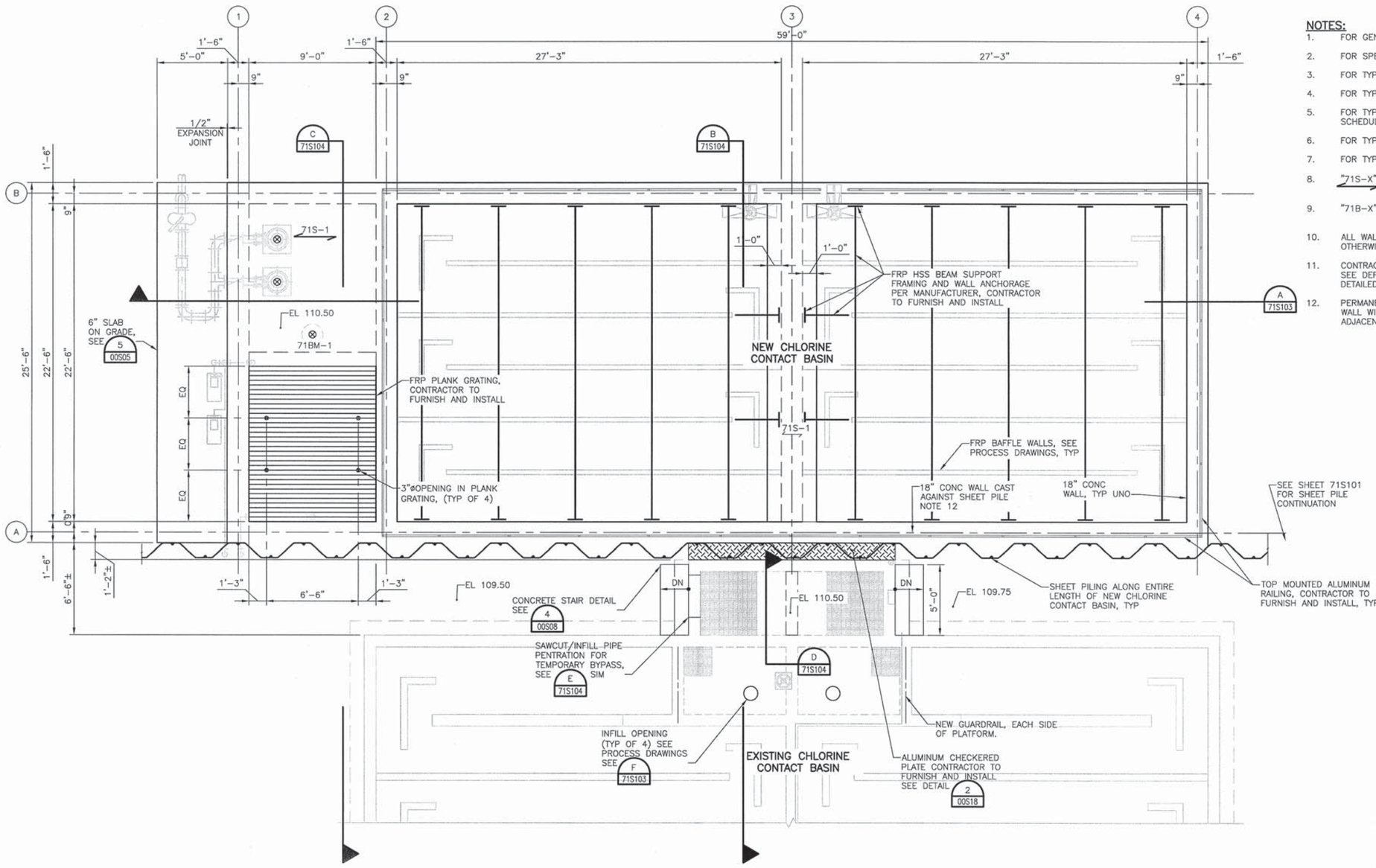

NOTES:

1. FOR GENERAL NOTES, SEE SHEET 00S01 AND 00S02.
2. FOR SPECIAL INSPECTION REQUIREMENTS, SEE 00S03 AND 00S04.
3. FOR TYPICAL CONCRETE DETAILS, SEE SHEETS 00S05 THRU 00S08.
4. FOR TYPICAL REINFORCING DETAILS, SEE 00S09.
5. FOR TYPICAL CONCRETE BEAM, SLAB, AND WALL DETAILS AND SCHEDULES, SEE SHEETS 00S11 AND 00S12.
6. FOR TYPICAL GRATING DETAILS, SEE SHEET 00S18.
7. FOR TYPICAL RAILING DETAILS, SEE SHEET 00S19 AND 00S20.
8. "71S-X" DENOTES CONCRETE SLAB. SEE SHEET 00S05 AND 00S12 FOR DETAILS AND SCHEDULE.
9. "71B-X" DENOTES CONCRETE BEAM. SEE SHEET 00S12 FOR DETAILS AND SCHEDULE.
10. ALL WALLS ARE CENTERED ON GRID LINES, UNLESS NOTED OTHERWISE.
11. CONTRACTOR TO DESIGN FRP BAFFLE WALLS AND THEIR SUPPORTS. SEE DEFERRED APPROVALS IN GENERAL STRUCTURAL NOTES FOR DETAILED REQUIREMENT.
12. PERMANENT SHEET PILES BY CONTRACTOR. ADJACENT CONCRETE WALL WILL BE CAST AGAINST SHEET PILE TO LEVEL OF EXISTING ADJACENT FOUNDATION.

CHLORINE CONTACT BASIN – TOP PLAN

SCALE: 1/4"=1'-0"

TRUE NORTH

PROJECT NORTH

FILE: 215786-71S102.dwg
DATE: Jun 29, 2015-4:38:13pm, ahil

HDR Engineering, Inc.

ISSUE	DATE	DESCRIPTION
A	JUNE 2015	ISSUED FOR BID

PROJECT MANAGER	C. OLSON
DESIGNED	Z. LI
DESIGNED	
CHECKED	C. OLSON
DRAWN	D. ELDREDGE
DATE	JUNE 30, 2015
PROJECT NUMBER	215786

REGISTERED PROFESSIONAL ENGINEER — ZHEN LI — NO. 74809 — EXP. 12/31/15 — 6/30/2015 — CIVIL — STATE OF CALIFORNIA

CITY OF PINOLE CALIFORNIA 1903

PINOLE/HERCULES WATER POLLUTION CONTROL PLANT UPGRADE
CLIENT PN

STRUCTURAL

CHLORINE CONTACT BASIN TOP PLAN

0 1" 2"

FILENAME	215786-71S102
SCALE	AS NOTED

SHEET **71S102**

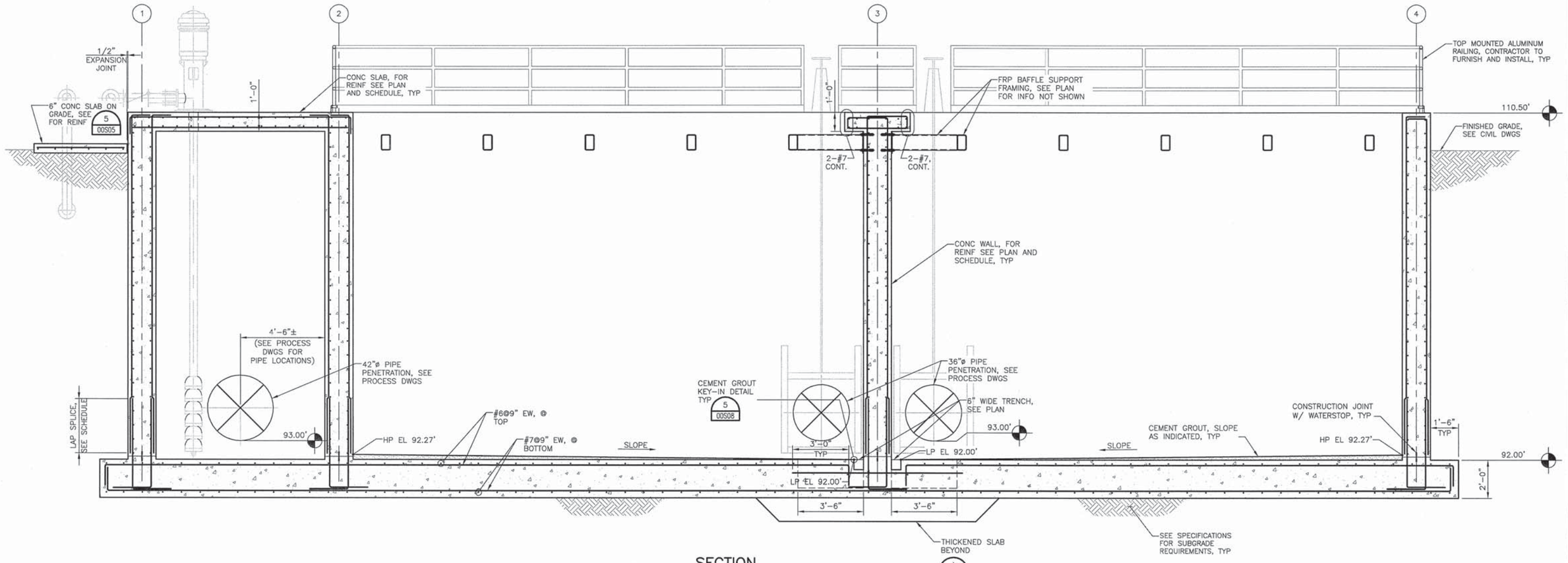

SECTION
SCALE: 3/8"=1'-0"
A
71S101

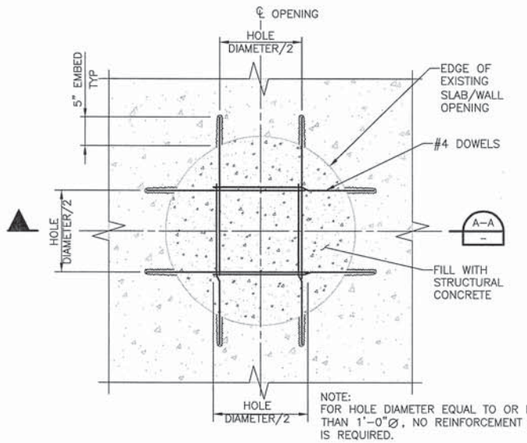

NOTE:
FOR HOLE DIAMETER EQUAL TO OR LESS THAN 1'-0"ø, NO REINFORCEMENT DOWEL IS REQUIRED.

SECTION
SCALE: 1"=1'-0"
F
71S101

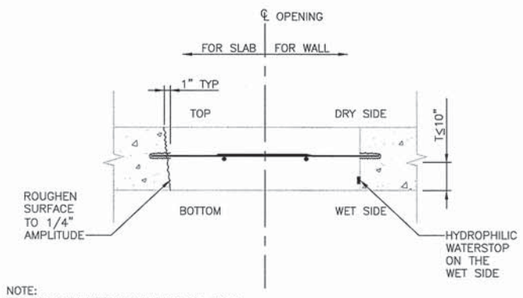

NOTE:
FOR HOLE DIAMETER EQUAL TO OR LESS THAN 1'-0"ø, NO REINFORCEMENT DOWEL IS REQUIRED.

SECTION
SCALE: 1"=1'-0"
A-A

FILE: 215786-71S103.dwg
DATE: Jun 29, 2015 - 3:57:03pm, jwebb

HDR
HDR Engineering, Inc.

ISSUE	DATE	DESCRIPTION
A	JUNE 2015	ISSUED FOR BID

PROJECT MANAGER	C. OLSON
DESIGNED	Z. LI
DESIGNED	
CHECKED	C. OLSON
DRAWN	D. ELDREDGE
DATE	JUNE 30, 2015
PROJECT NUMBER	215786

REGISTERED PROFESSIONAL ENGINEER
ZHEN LI
NO. 74809
EXP. 12/31/15
6/30/2015
CIVIL
STATE OF CALIFORNIA

CITY OF PINOLE CALIFORNIA 1903

PINOLE/HERCULES
WATER POLLUTION
CONTROL PLANT UPGRADE
CLIENT PN

STRUCTURAL

CHLORINE CONTACT BASIN - SECTIONS - 1

0 1" 2"

FILENAME	215786-71S103
SCALE	AS NOTED

SHEET
71S103

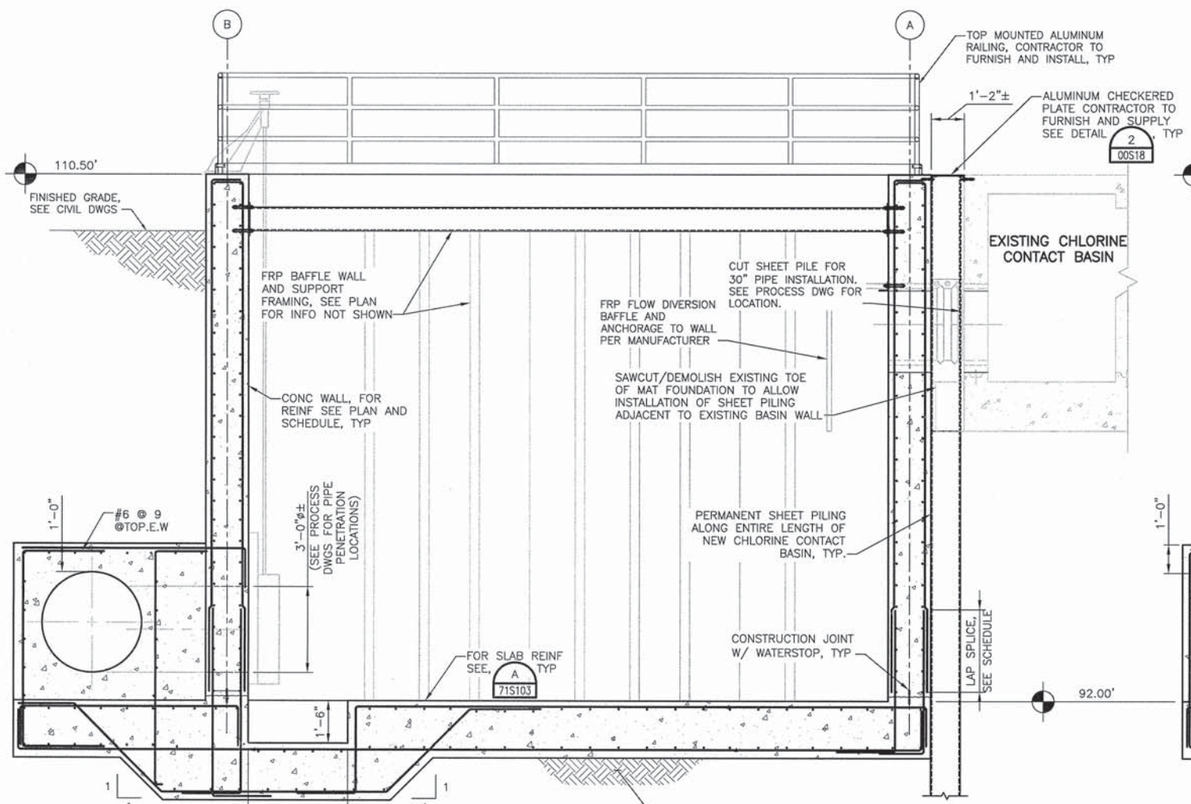

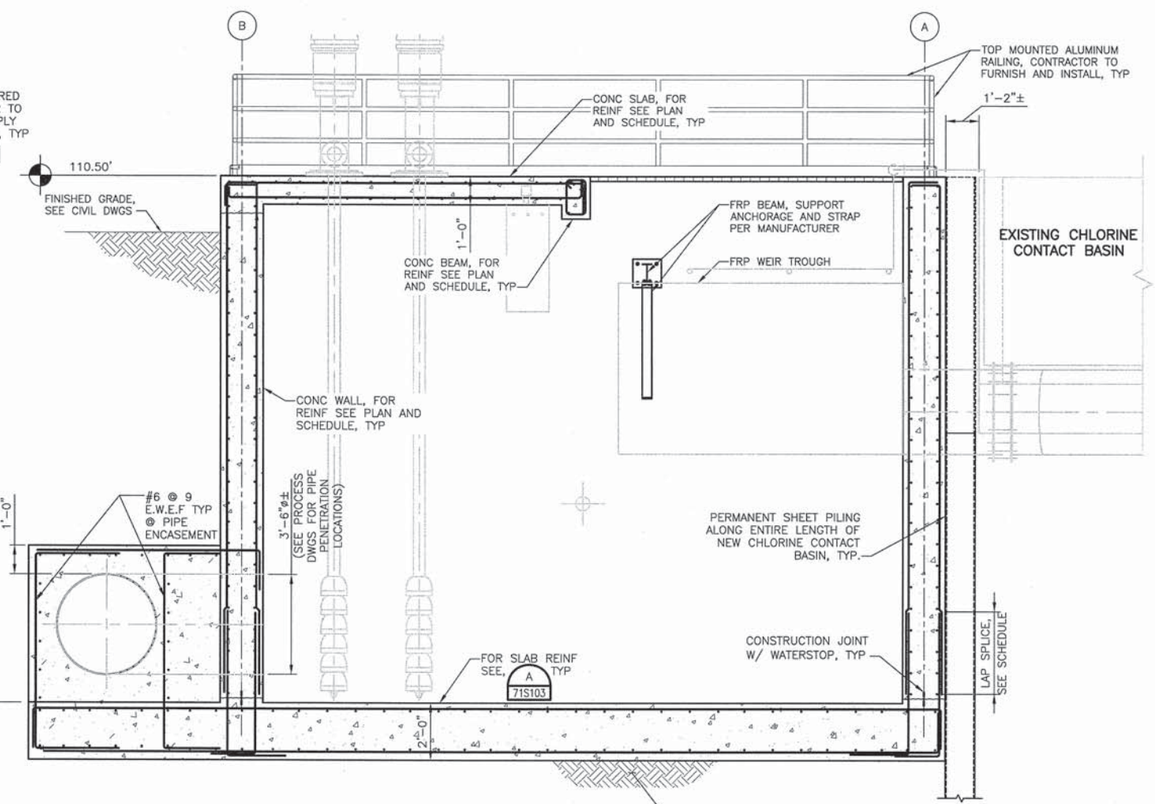

SECTION
SCALE: 3/8"=1'-0" — B 71S101

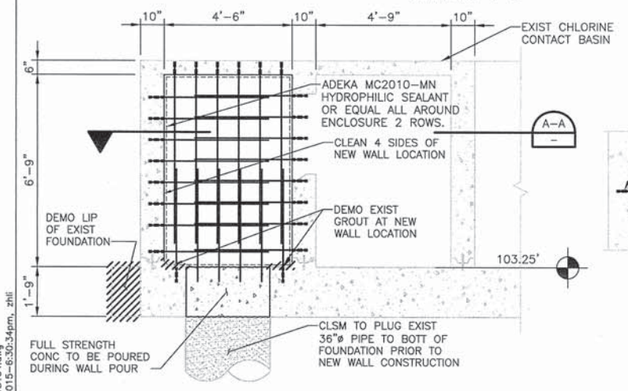

SECTION
SCALE: 3/8"=1'-0" — D 71S101

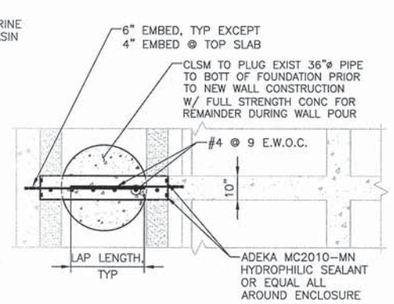

SECTION A–A

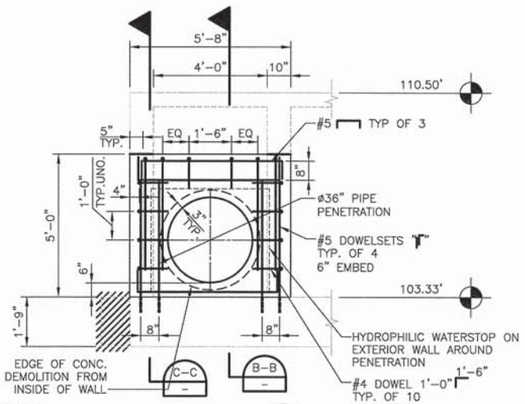

SECTION
SCALE: 3/8"=1'-0" — E 71S101

SECTION
SCALE: 3/8"=1'-0" — C 71S101

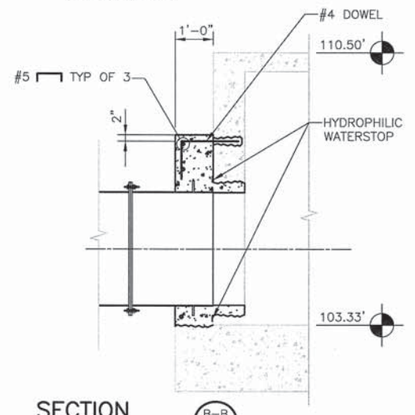

SECTION
SCALE: 1/2"=1'-0" — B–B

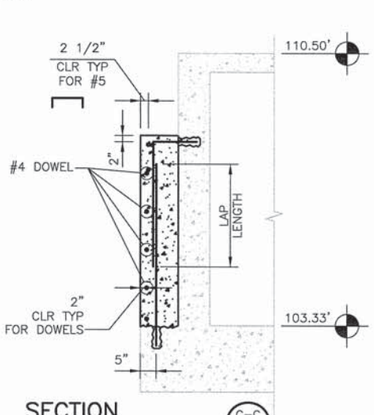

SECTION
SCALE: 1/2"=1'-0" — C–C

FILE: 215786-71S104.dwg
DATE: Jun 29, 2015-8:30:34pm, zhli

HDR Engineering, Inc.

ISSUE	DATE	DESCRIPTION
A	JUNE 2015	ISSUED FOR BID

PROJECT MANAGER	C. OLSON
DESIGNED	Z. LI
DESIGNED	
CHECKED	O. TAVANGAR
DRAWN	D. ELDREDGE
DATE	JUNE 30, 2015
PROJECT NUMBER	215786

REGISTERED PROFESSIONAL ENGINEER — ZHEN LI — NO. 74809 — EXP. 12/31/15 — CIVIL — STATE OF CALIFORNIA — 6/30/2015

CITY OF PINOLE CALIFORNIA 1903

PINOLE/HERCULES WATER POLLUTION CONTROL PLANT UPGRADE CLIENT PN

STRUCTURAL
CHLORINE CONTACT BASIN - SECTIONS 2

0 1" 2"

FILENAME	215786-71S104
SCALE	AS NOTED

SHEET 71S104

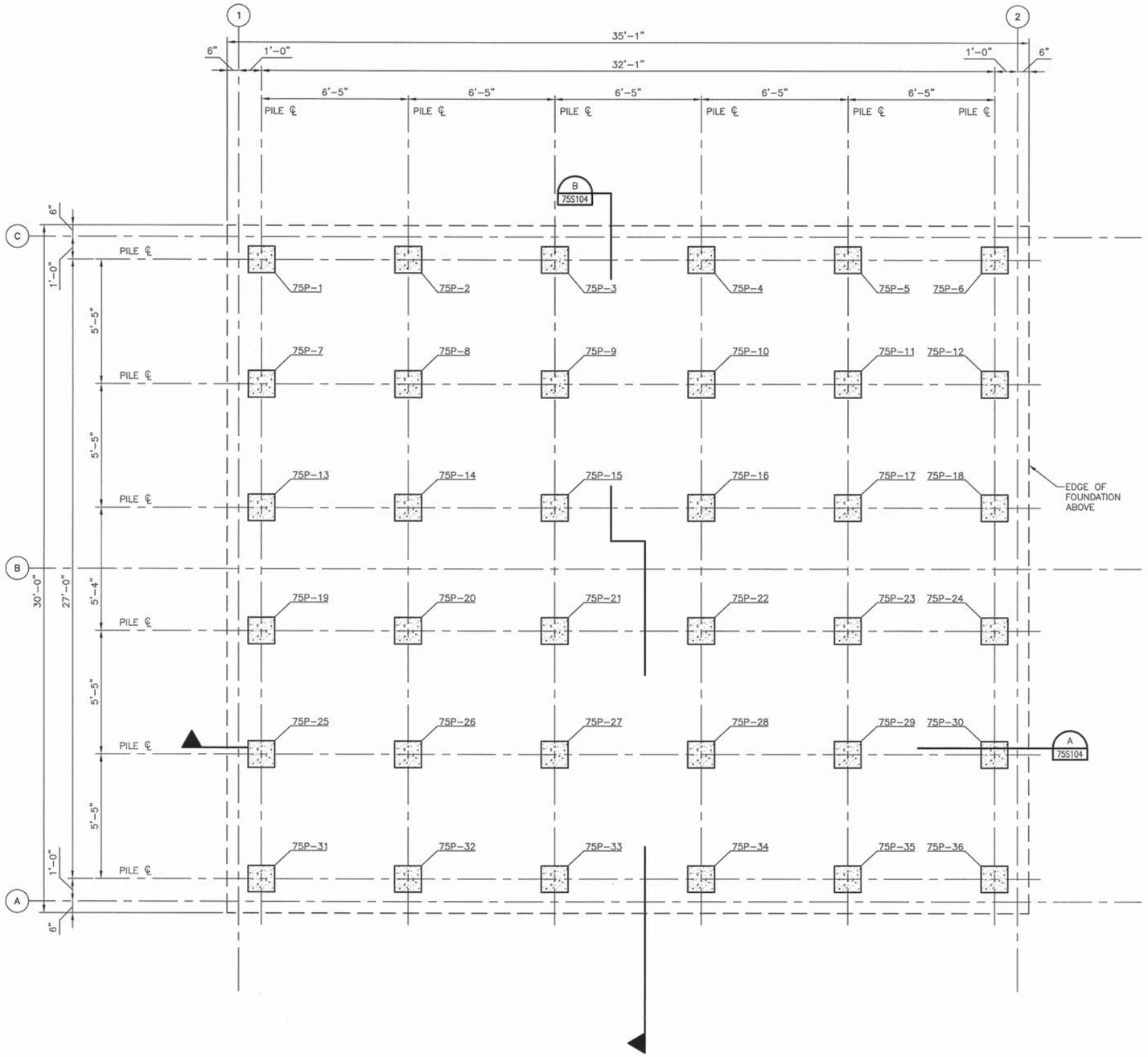

PILE LAYOUT PLAN

SCALE: 3/8" = 1'-0"

1

NOTES:

1. FOR GENERAL NOTES, SEE SHEET 00S01 AND 00S02.
2. FOR SPECIAL INSPECTION REQUIREMENTS, SEE 00S03 AND 00S04.
3. FOR TYPICAL CONCRETE DETAILS, SEE SHEETS 00S05 THRU 00S08.
4. FOR TYPICAL PILE DETAILS AND SCHEDULE, SEE SHEET 00S10.
5. FOR TYPICAL GRATING DETAILS, SEE SHEET 00S18.
6. FOR TYPICAL RAILING DETAILS, SEE SHEET 00S19 AND 00S20.
7. ALL WALLS, PILES, AND PILECAPS ARE CENTERED ON GRID LINES, UNLESS NOTED OTHERWISE.
8. "75P-X" DENOTES 14" SQUARE PRE-STRESSED PRECAST CONCRETE PILES. SEE SHEET 00S10 FOR DETAILS AND SCHEDULE.

TRUE NORTH

PROJECT NORTH

HDR Engineering, Inc.

ISSUE	DATE	DESCRIPTION
A	JUNE 2015	ISSUED FOR BID

PROJECT MANAGER	C. OLSON
DESIGNED	M. MOSTAFA
DESIGNED	
CHECKED	O. TAVANGAR
DRAWN	D. ELDREDGE
DATE	JUNE 30, 2015
PROJECT NUMBER	215786

REGISTERED PROFESSIONAL ENGINEER — MOHAMMADREZA MOSTAFA — NO. 78649 EXP. 09/30/15 — CIVIL — STATE OF CALIFORNIA — 06/30/15

CITY OF PINOLE CALIFORNIA 1903

PINOLE/HERCULES
WATER POLLUTION
CONTROL PLANT UPGRADE
CLIENT PN

STRUCTURAL

HYPOCHLORIDE / BISULFITE CHEMICAL STORAGE AND FEED, PILE LAYOUT PLAN

0 1" 2"

FILENAME	215786-75S101
SCALE	AS NOTED

SHEET 75S101

FILE: 215786-75S101.dwg
DATE: Jun 30, 2015-8:44:23am, jwebb

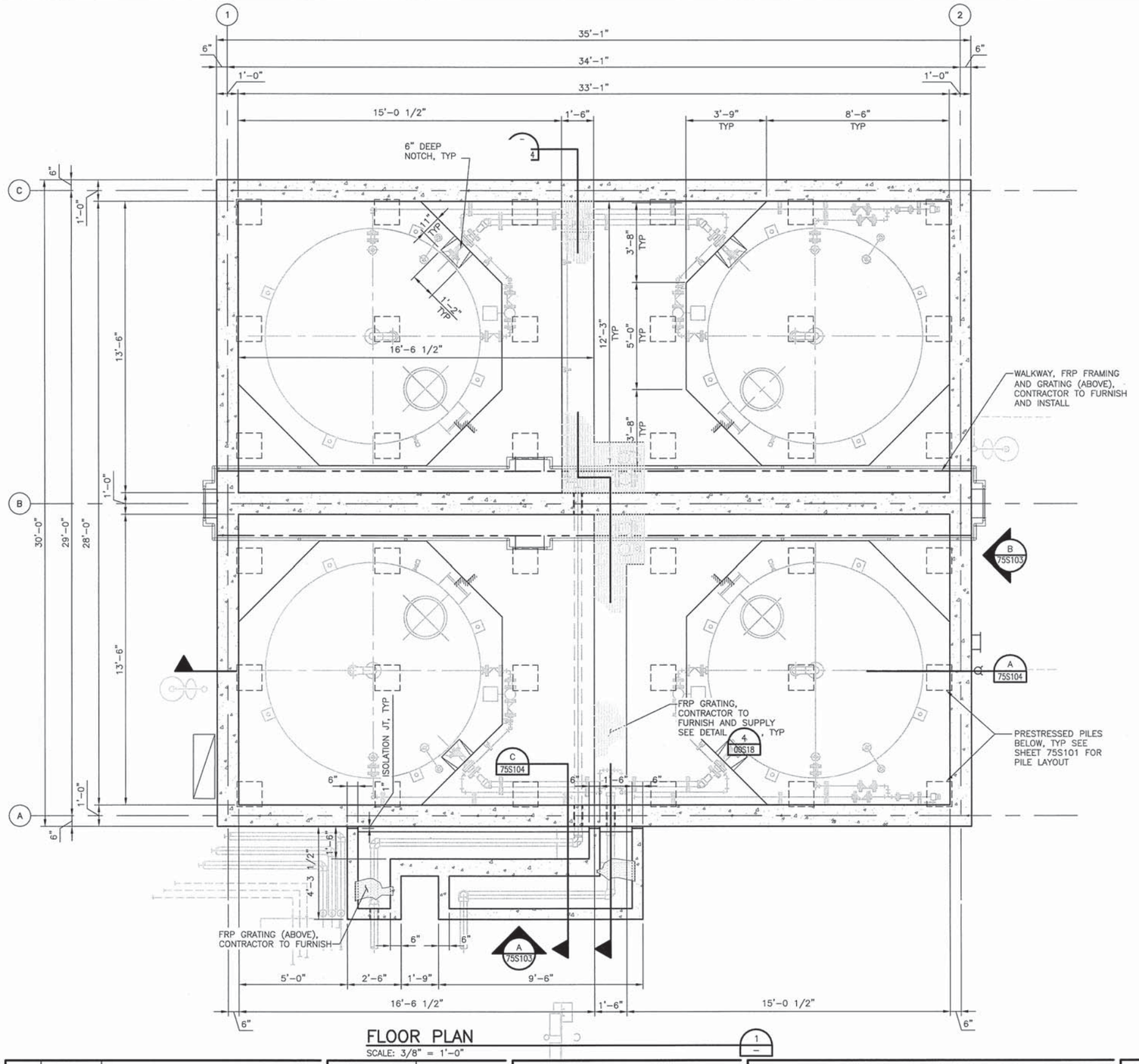

FLOOR PLAN

SCALE: 3/8" = 1'-0"

NOTES:

1. FOR GENERAL NOTES, SEE SHEET 00S01 AND 00S02.
2. FOR SPECIAL INSPECTION REQUIREMENTS, SEE 00S03 AND 00S04.
3. FOR TYPICAL CONCRETE DETAILS, SEE SHEETS 00S05 THRU 00S08.
4. FOR TYPICAL REINFORCING DETAILS, SEE 00S09.
5. FOR TYPICAL CONCRETE SLAB, AND WALL DETAILS, SEE SHEETS 00S11 AND 00S12.
6. FOR TYPICAL PILE DETAILS AND SCHEDULE, SEE SHEET 00S10.
7. FOR TYPICAL GRATING DETAILS, SEE SHEET 00S18.
8. FOR TYPICAL RAILING DETAILS, SEE SHEET 00S19 AND 00S20.
9. DENOTES CHANGE IN TOP OF CONCRETE ELEVATION.
10. ALL COLUMNS, WALLS, PILES, AND PILECAPS ARE CENTERED ON GRID LINES, UNLESS NOTED OTHERWISE.
11. CONTRACTOR TO VERIFY ALL DIMENSIONS AND LOCATIONS WITH THE PROCESS DRAWINGS.

TRUE NORTH

PROJECT NORTH

FILE: 215786-75S102.dwg
DATE: Jun 30, 2015-8:44:27am, jwebb

HDR Engineering, Inc.

ISSUE	DATE	DESCRIPTION
A	JUNE 2015	ISSUED FOR BID

PROJECT MANAGER	C. OLSON
DESIGNED	M. MOSTAFA
DESIGNED	
CHECKED	O. TAVANGAR
DRAWN	D. ELDREDGE
DATE	JUNE 30, 2015
PROJECT NUMBER	215786

REGISTERED PROFESSIONAL ENGINEER MOHAMMADREZA MOSTAFA NO. 78649 EXP. 09/30/15 CIVIL STATE OF CALIFORNIA 06/30/15

CITY OF PINOLE CALIFORNIA 1903

PINOLE/HERCULES
WATER POLLUTION
CONTROL PLANT UPGRADE
CLIENT PN

STRUCTURAL

HYPOCHLORIDE / BISULFITE CHEMICAL STORAGE AND FEED, FLOOR PLAN

0 1" 2"

FILENAME	215786-75S102
SCALE	AS NOTED

SHEET 75S102

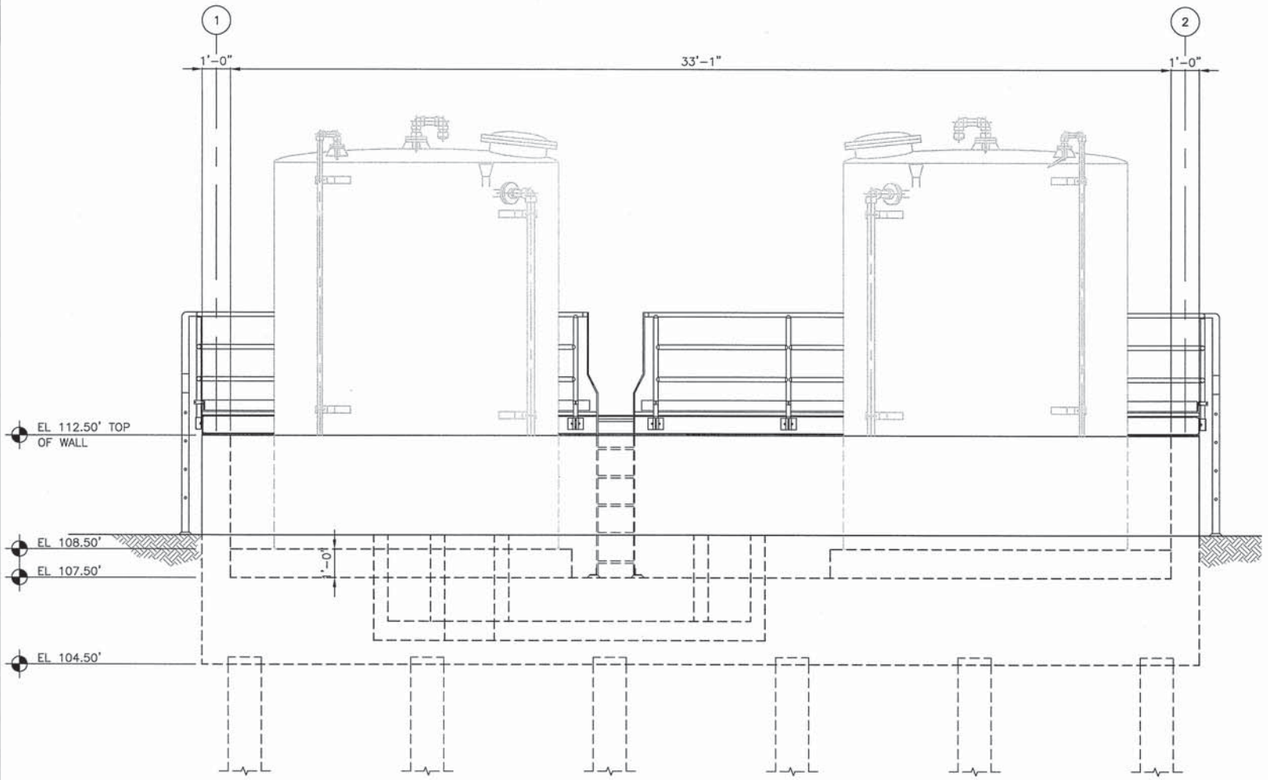

ELEVATION
SCALE: 3/8" = 1'-0"

A 75S102

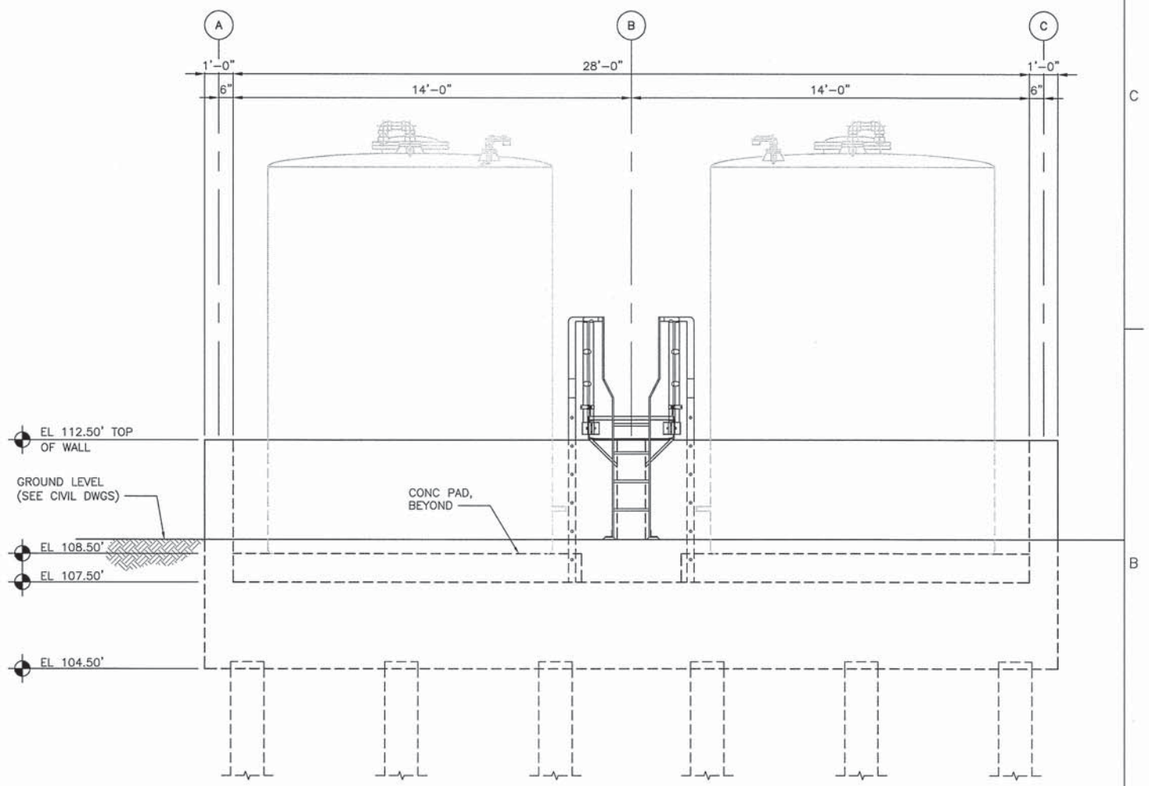

ELEVATION
SCALE: 3/8" = 1'-0"

B 75S102

NOTES:

1. FOR GENERAL NOTES, SEE SHEET 00S01 AND 00S02.
2. FOR SPECIAL INSPECTION REQUIREMENTS, SEE 00S03 AND 00S04.
3. FOR TYPICAL CONCRETE DETAILS, SEE SHEETS 00S05 THRU 00S08.
4. FOR TYPICAL PILE DETAILS AND SCHEDULE, SEE SHEET 00S10.
5. FOR TYPICAL GRATING DETAILS, SEE SHEET 00S18.
6. FOR TYPICAL RAILING DETAILS, SEE SHEET 00S19 AND 00S20.
7. ALL WALLS, PILES, AND PILECAPS ARE CENTERED ON GRID LINES, UNLESS NOTED OTHERWISE.

FILE: 215786-75S103.dwg
DATE: Jun 30, 2015 - 8:44:31am, jwebb

HDR Engineering, Inc.

ISSUE	DATE	DESCRIPTION
A	JUNE 2015	ISSUED FOR BID

PROJECT MANAGER	C. OLSON
DESIGNED	M. MOSTAFA
DESIGNED	
CHECKED	O. TAVANGAR
DRAWN	D. ELDREDGE
DATE	JUNE 30, 2015
PROJECT NUMBER	215786

REGISTERED PROFESSIONAL ENGINEER
MOHAMMADREZA MOSTAFA
NO. 78649
EXP. 09/30/15
CIVIL
STATE OF CALIFORNIA
06/30/15

CITY OF PINOLE CALIFORNIA 1903

PINOLE/HERCULES
WATER POLLUTION
CONTROL PLANT UPGRADE
CLIENT PN

STRUCTURAL

HYPOCHLORIDE / BISULFITE CHEMICAL STORAGE AND FEED, ELEVATOINS

0 1" 2"

FILENAME	215786-75S103
SCALE	AS NOTED

SHEET
75S103

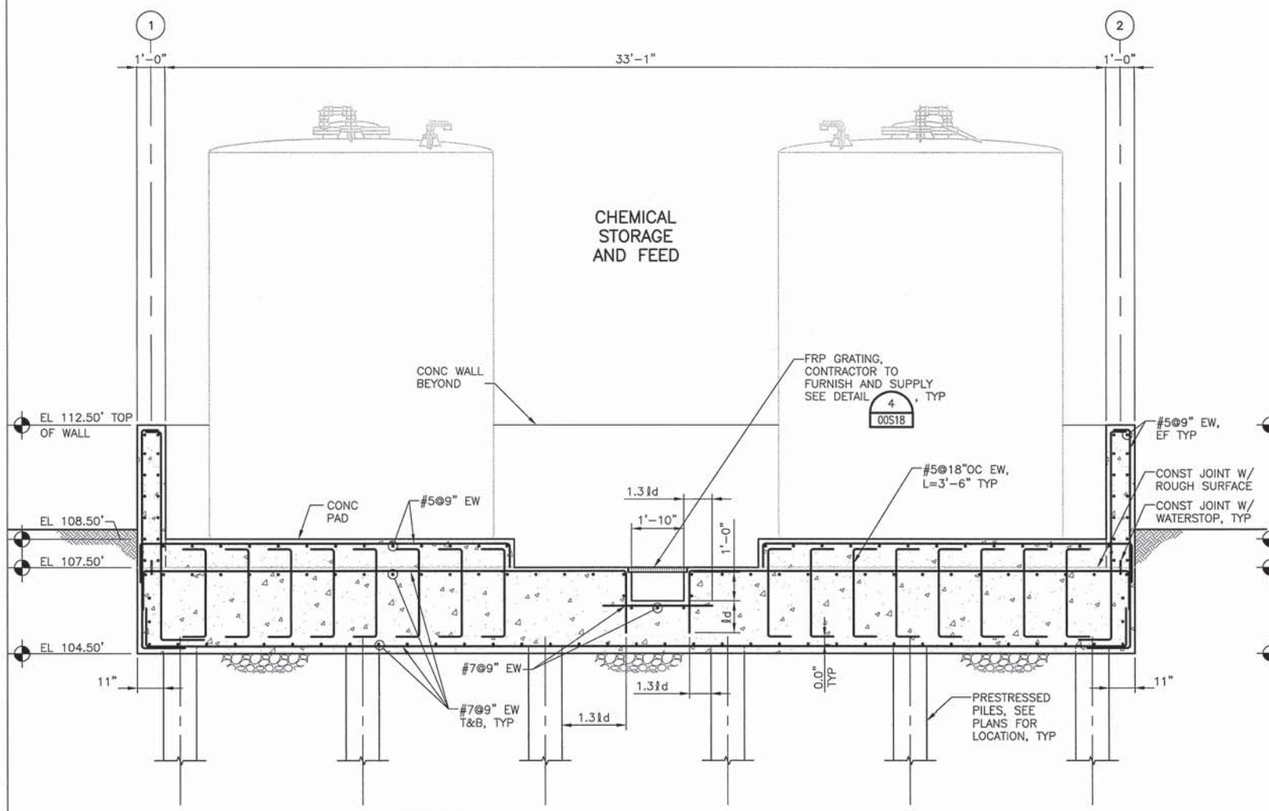

SECTION
SCALE: 3/8" = 1'-0"
A 75S101

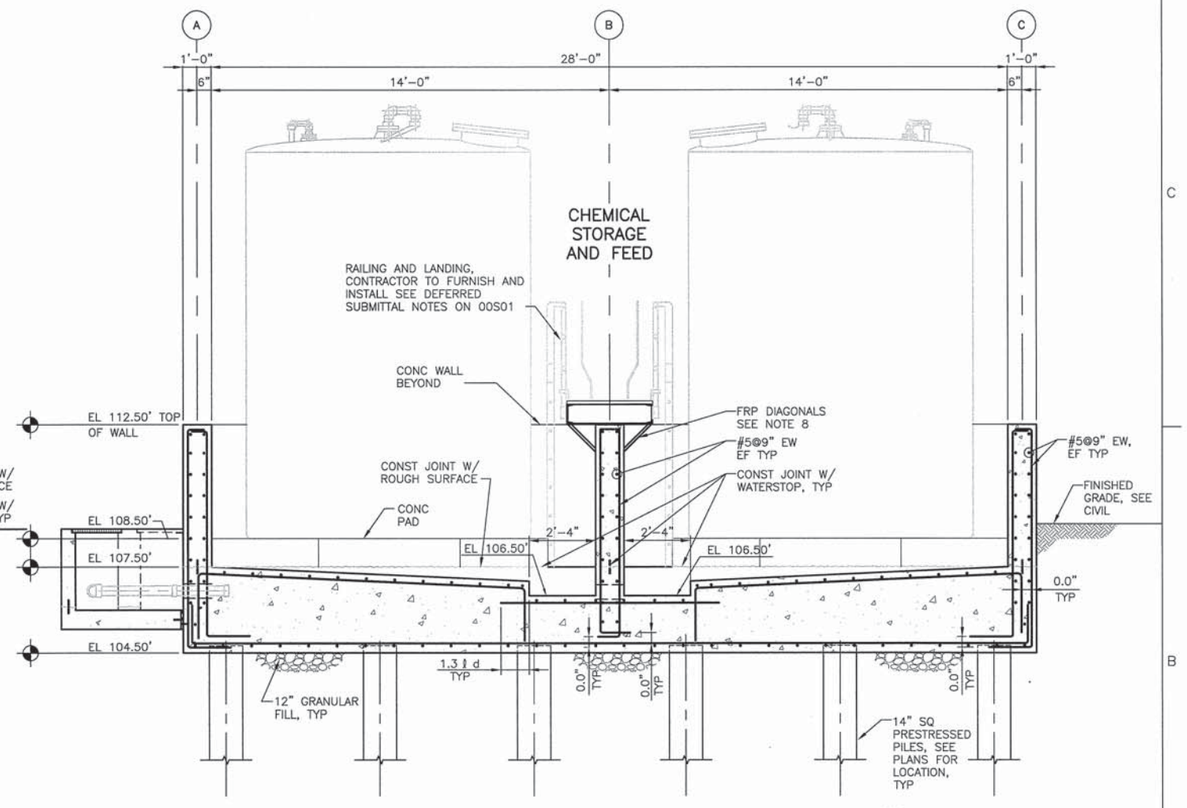

SECTION
SCALE: 3/8" = 1'-0"
B 75S101

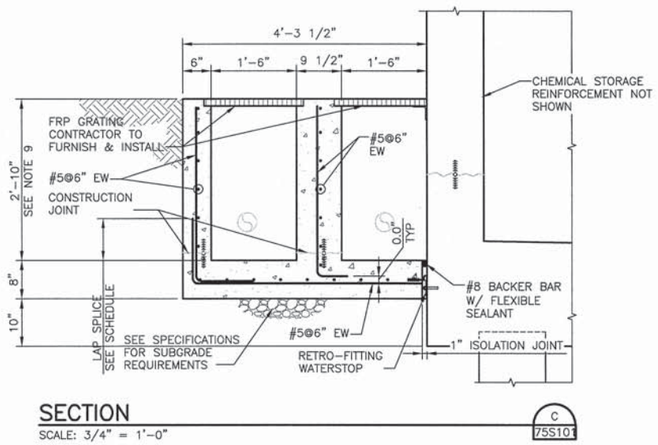

SECTION
SCALE: 3/4" = 1'-0"
C 75S101

NOTES:

1. FOR GENERAL NOTES, SEE SHEET 00S01 AND 00S02.
2. FOR SPECIAL INSPECTION REQUIREMENTS, SEE 00S03 AND 00S04.
3. FOR TYPICAL CONCRETE DETAILS, SEE SHEETS 00S05 THRU 00S08.
4. FOR TYPICAL PILE DETAILS AND SCHEDULE, SEE SHEET 00S10.
5. FOR TYPICAL GRATING DETAILS, SEE SHEET 00S18.
6. FOR TYPICAL RAILING DETAILS, SEE SHEET 00S19 AND 00S20.
7. ALL WALLS, PILES, AND PILECAPS ARE CENTERED ON GRID LINES, UNLESS NOTED OTHERWISE.
8. THE FRAMING FOR THE FRP GRATING CAN ONLY BE SUPPORTED BY THE WALL.
9. CONTRACTOR TO VERIFY ALL ELEVATIONS, DIMENSIONS AND LOCATIONS WITH THE PROCESS DRAWINGS.

FILE: 215786-75S104.dwg
DATE: Jun 30, 2015-8:44:35am, jwebb

HDR
HDR Engineering, Inc.

ISSUE	DATE	DESCRIPTION
A	JUNE 2015	ISSUED FOR BID

PROJECT MANAGER	C. OLSON
DESIGNED	M. MOSTAFA
DESIGNED	
CHECKED	O. TAVANGAR
DRAWN	D. ELDREDGE
DATE	JUNE 30, 2015
PROJECT NUMBER	215786

REGISTERED PROFESSIONAL ENGINEER MOHAMMADREZA MOSTAFA NO. 78649 EXP. 09/30/15 CIVIL STATE OF CALIFORNIA
06/30/15

CITY OF PINOLE CALIFORNIA 1903

PINOLE/HERCULES
WATER POLLUTION
CONTROL PLANT UPGRADE
CLIENT PN

STRUCTURAL
HYPOCHLORIDE / BISULFITE CHEMICAL STORAGE AND FEED, SECTIONS

0 1" 2"

FILENAME	215786-75S104
SCALE	AS NOTED

SHEET
75S104

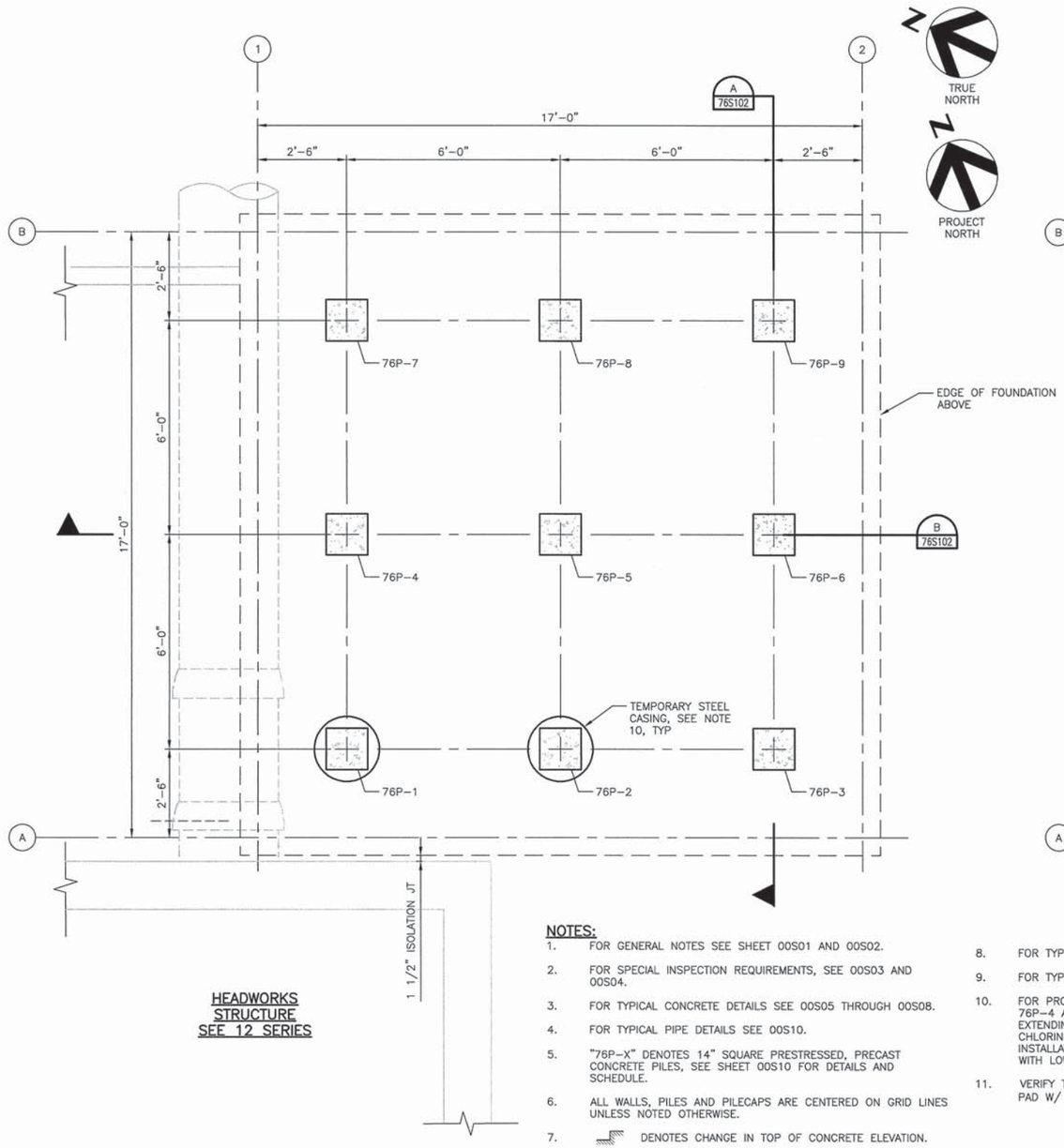

HEADWORKS STRUCTURE SEE 12 SERIES

NOTES:

1. FOR GENERAL NOTES SEE SHEET 00S01 AND 00S02.
2. FOR SPECIAL INSPECTION REQUIREMENTS, SEE 00S03 AND 00S04.
3. FOR TYPICAL CONCRETE DETAILS SEE 00S05 THROUGH 00S08.
4. FOR TYPICAL PIPE DETAILS SEE 00S10.
5. "76P-X" DENOTES 14" SQUARE PRESTRESSED, PRECAST CONCRETE PILES, SEE SHEET 00S10 FOR DETAILS AND SCHEDULE.
6. ALL WALLS, PILES AND PILECAPS ARE CENTERED ON GRID LINES UNLESS NOTED OTHERWISE.
7. DENOTES CHANGE IN TOP OF CONCRETE ELEVATION.
8. FOR TYPICAL REINFORCING DETAILS SEE 00S09.
9. FOR TYPICAL GRATING DETAILS SEE 00S18.
10. FOR PROTECTION OF ADJACENT FOUNDATION PILE, 76P-1, 76P-4 AND 76P-7 SHALL BE DRIVEN THROUGH STEEL CASINGS EXTENDING FROM TOP OF SUBGRADE DOWN TO BOTTOM OF CHLORINE CONTACT STRUCTURE FOUNDATION. AFTER PILE INSTALLATION CASING SHALL BE REMOVED AND VOID FILLED WITH LOW DENSITY CONCRETE FILL.
11. VERIFY THE EXACT LOCATION AND DIMENSIONS OF CONCRETE PAD W/ PROCESS DRAWINGS.

FERRIC CHLORIDE STORAGE AND FEED, PILE LAYOUT PLAN

1/2" = 1'-0"

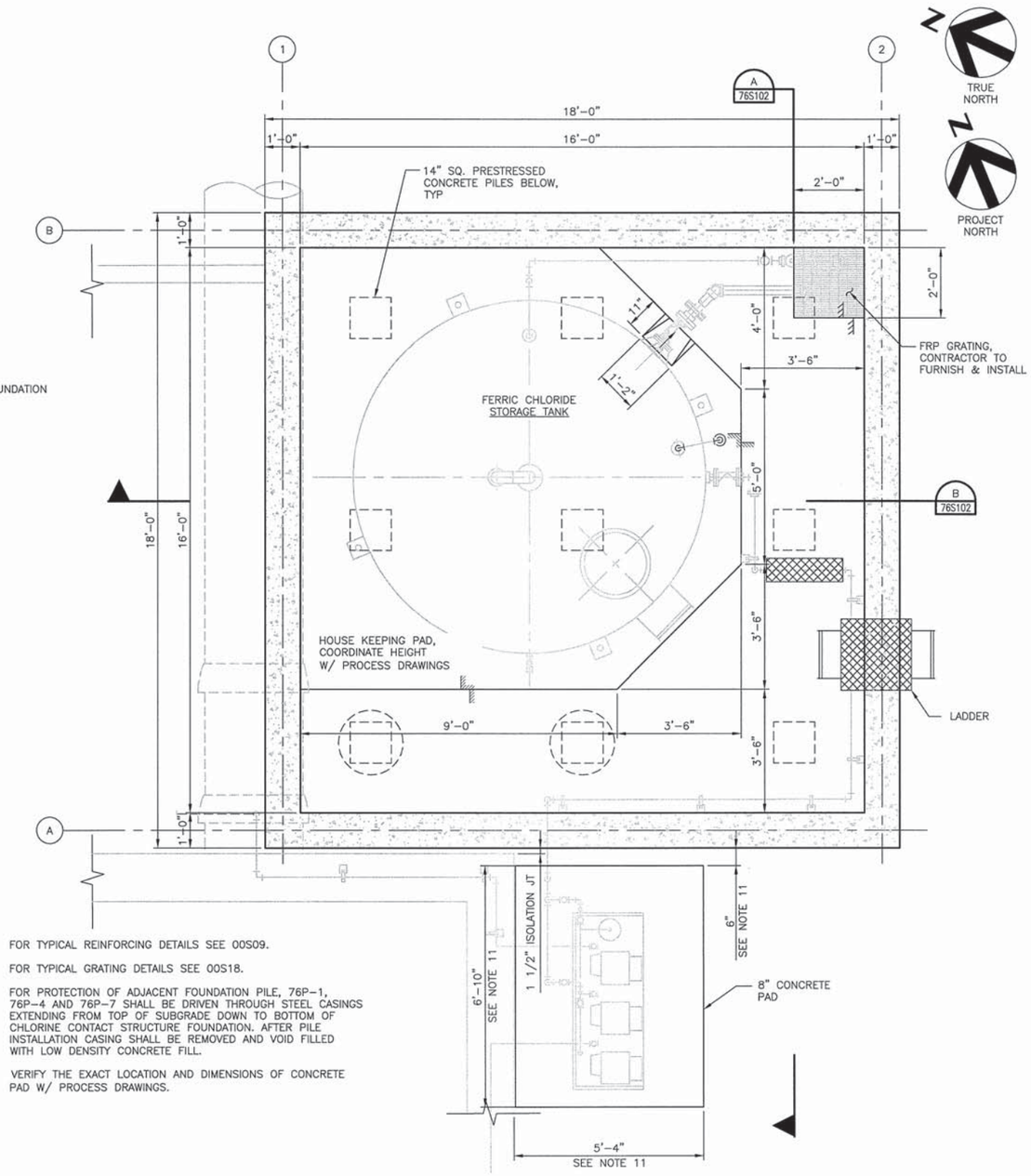

FERRIC CHLORIDE STORAGE AND FEED, PLAN

1/2" = 1'-0"

FILE: 215786-76S101.dwg
DATE: Jun 30, 2015-8:44:40am, jwebb

HDR Engineering, Inc.

ISSUE	DATE	DESCRIPTION
A	JUNE 2015	ISSUED FOR BID

PROJECT MANAGER	C. OLSON
DESIGNED	M. MOSTAFA
DESIGNED	
CHECKED	O. TAVANGAR
DRAWN	D. ELDREDGE
DATE	JUNE 30, 2015
PROJECT NUMBER	215786

REGISTERED PROFESSIONAL ENGINEER MOHAMMADREZA MOSTAFA NO. 78649 EXP. 09/30/15 CIVIL STATE OF CALIFORNIA 06/30/15

CITY OF PINOLE CALIFORNIA INCORPORATED 1903

PINOLE/HERCULES WATER POLLUTION CONTROL PLANT UPGRADE CLIENT PN

STRUCTURAL

FERRIC CHLORIDE CHEMICAL STORAGE AND FEED, PLANS

0 1" 2"

FILENAME	215786-76S101
SCALE	AS NOTED

SHEET **76S101**

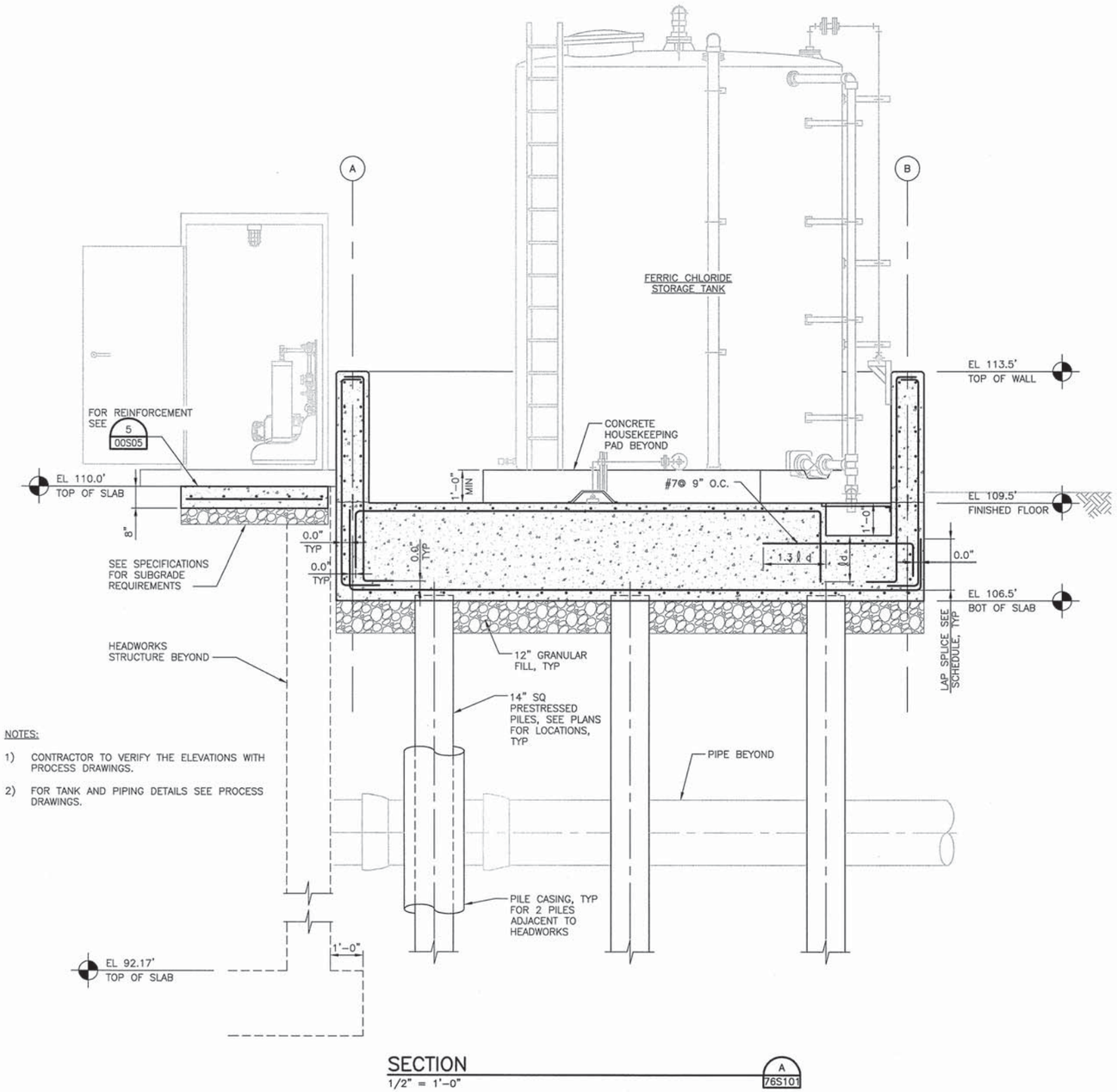

NOTES:

1) CONTRACTOR TO VERIFY THE ELEVATIONS WITH PROCESS DRAWINGS.
2) FOR TANK AND PIPING DETAILS SEE PROCESS DRAWINGS.

SECTION
1/2" = 1'-0"
A 76S101

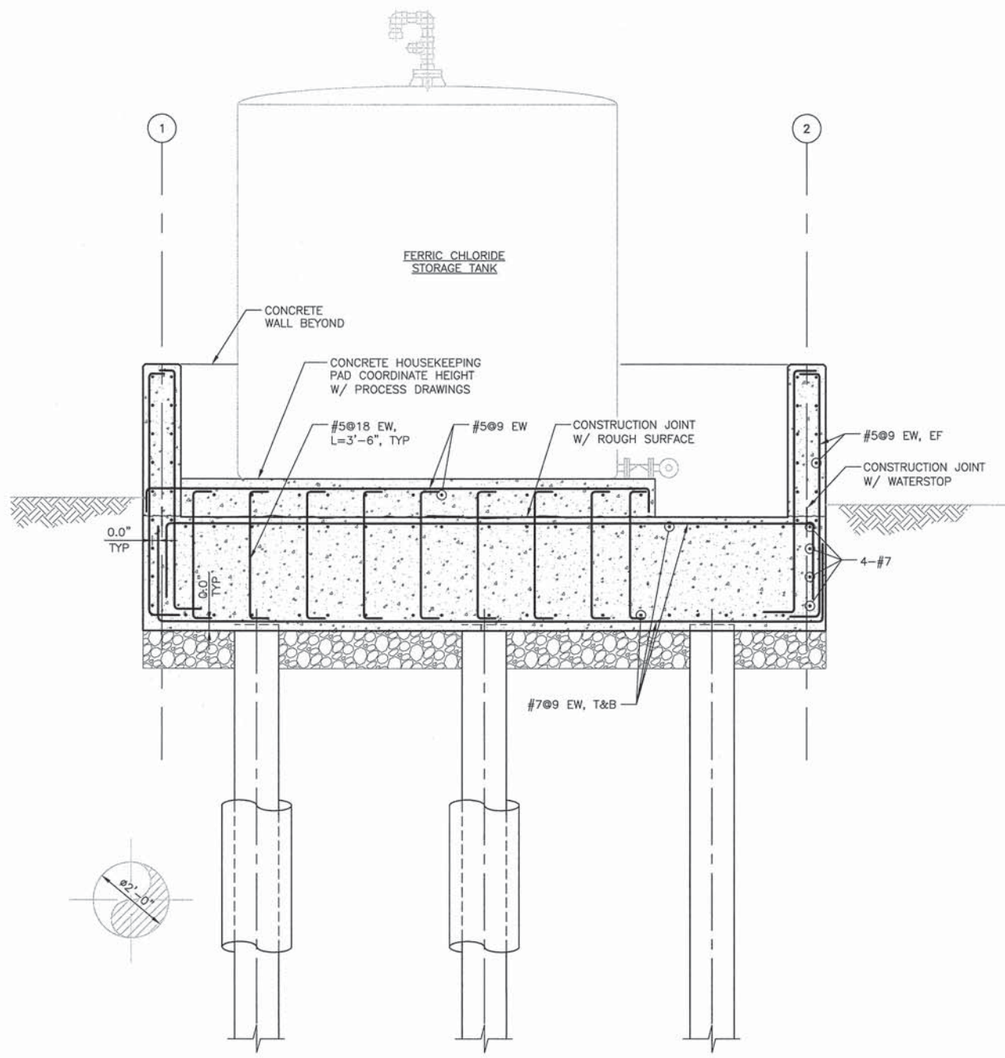

SECTION
1/2" = 1'-0"
B 76S101

FILE: 215786-76S102.dwg
DATE: Jun 30, 2015 - 9:18:02am, jwebb

HDR
HDR Engineering, Inc.

ISSUE	DATE	DESCRIPTION
A	JUNE 2015	ISSUED FOR BID

PROJECT MANAGER	C. OLSON
DESIGNED	M. MOSTAFA
DESIGNED	
CHECKED	O. TAVANGAR
DRAWN	
DATE	JUNE 30, 2015
PROJECT NUMBER	215786

REGISTERED PROFESSIONAL ENGINEER MOHAMMADREZA MOSTAFA NO. 78649 EXP. 09/30/15 CIVIL STATE OF CALIFORNIA 06/30/15

CITY OF PINOLE CALIFORNIA 1903

PINOLE/HERCULES
WATER POLLUTION
CONTROL PLANT UPGRADE
CLIENT PN

STRUCTURAL

FERRIC CHLORIDE CHEMICAL STORAGE AND FEED SECTIONS

0 1" 2"

FILENAME	215786-76S102
SCALE	AS NOTED

SHEET 76S102

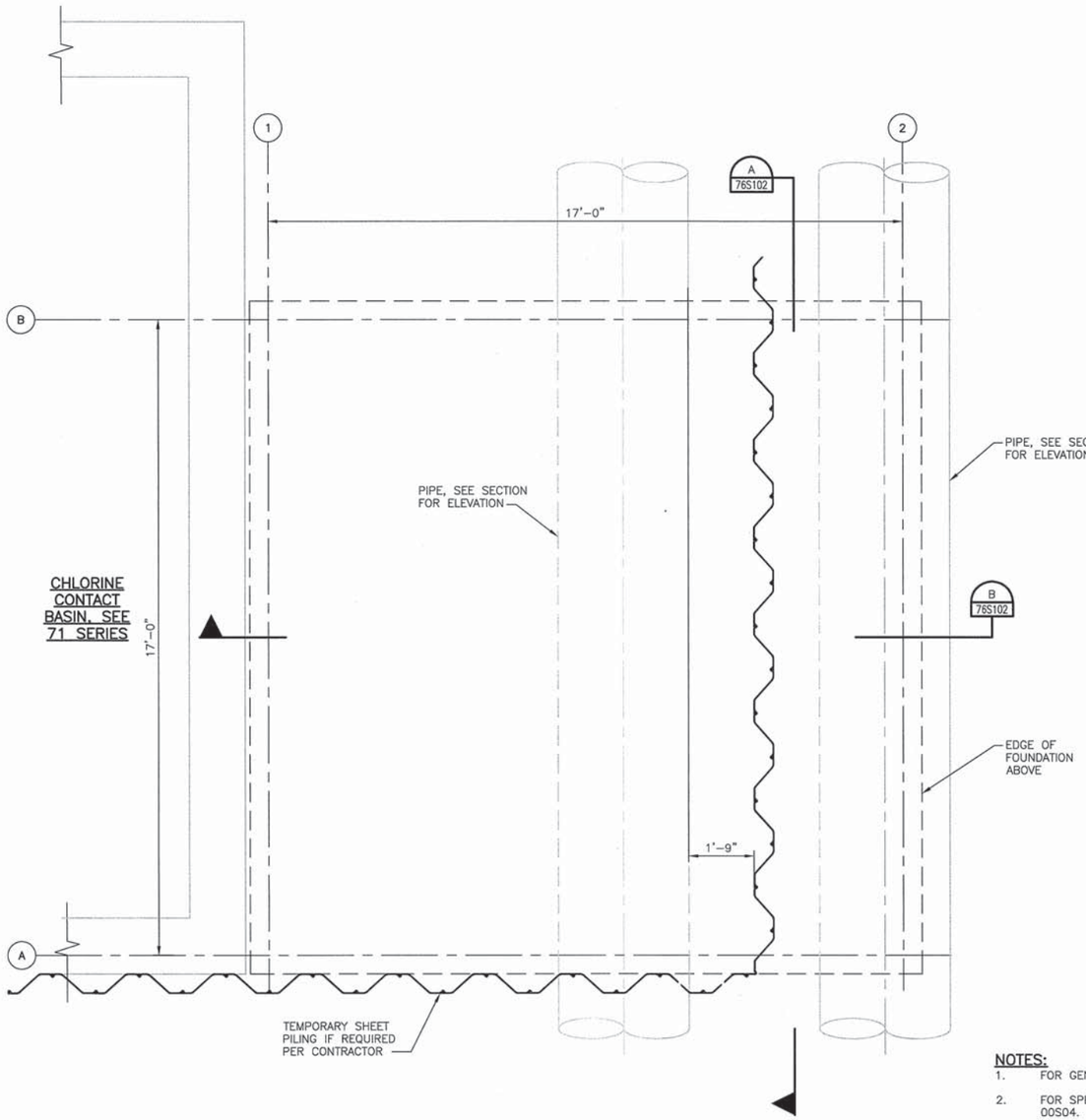

LOWER PLAN

1/2" = 1'-0"

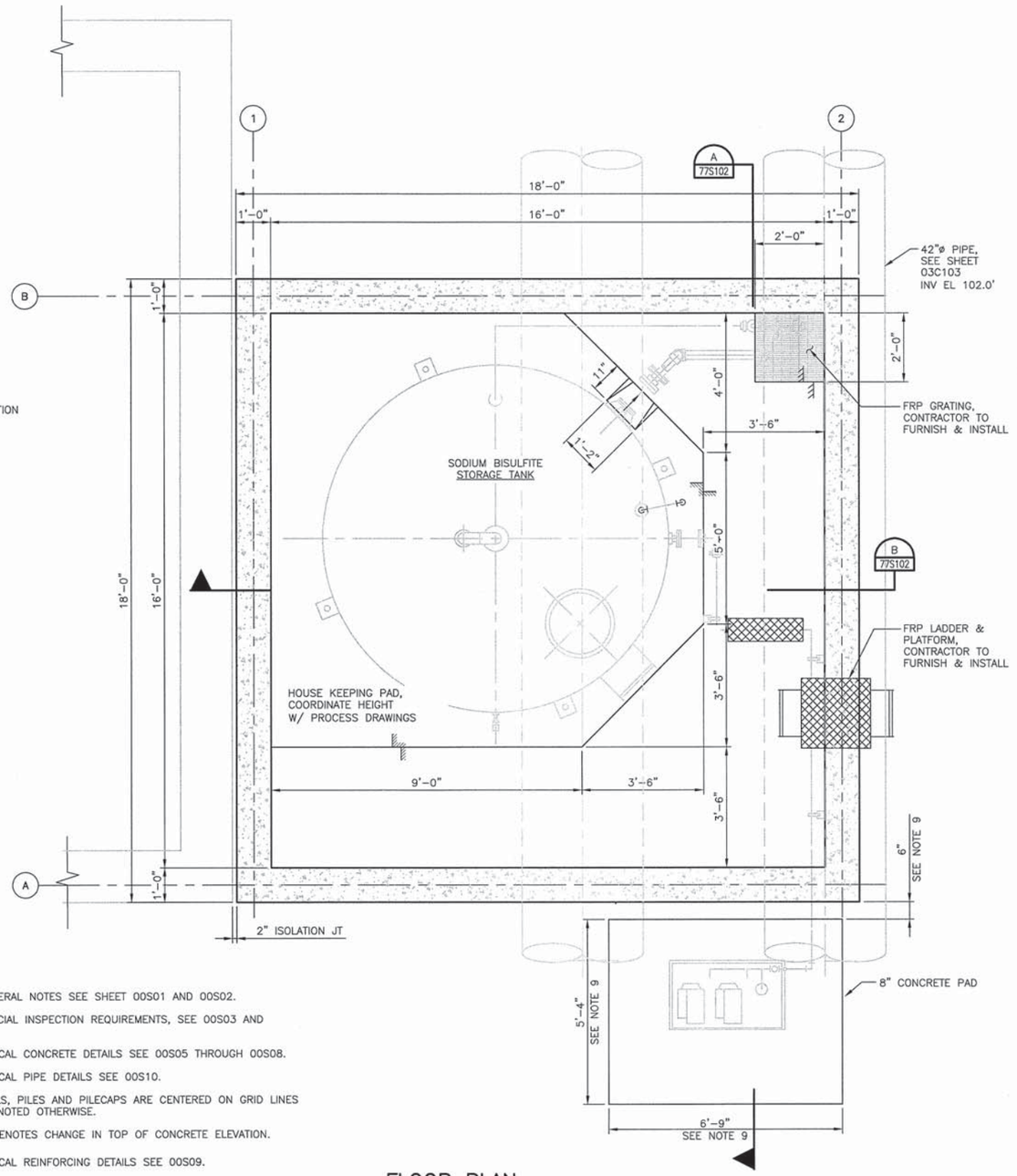

FLOOR PLAN

1/2" = 1'-0"

NOTES:

1. FOR GENERAL NOTES SEE SHEET 00S01 AND 00S02.
2. FOR SPECIAL INSPECTION REQUIREMENTS, SEE 00S03 AND 00S04.
3. FOR TYPICAL CONCRETE DETAILS SEE 00S05 THROUGH 00S08.
4. FOR TYPICAL PIPE DETAILS SEE 00S10.
5. ALL WALLS, PILES AND PILECAPS ARE CENTERED ON GRID LINES UNLESS NOTED OTHERWISE.
6. DENOTES CHANGE IN TOP OF CONCRETE ELEVATION.
7. FOR TYPICAL REINFORCING DETAILS SEE 00S09.
8. FOR TYPICAL GRATING DETAILS SEE 00S18.
9. VERIFY THE EXACT LOCATION AND DIMENSIONS OF CONCRETE PAD W/ PROCESS DRAWINGS.

TRUE NORTH

PROJECT NORTH

FILE: 215786-77S101.dwg
DATE: Jun 30, 2015-8:44:52am, jwebb

HDR Engineering, Inc.

ISSUE	DATE	DESCRIPTION
A	JUNE 2015	ISSUED FOR BID

PROJECT MANAGER	C. OLSON
DESIGNED	M. MOSTAFA
DESIGNED	
CHECKED	O. TAVANGAR
DRAWN	
DATE	JUNE 30, 2015
PROJECT NUMBER	215786

REGISTERED PROFESSIONAL ENGINEER MOHAMMADREZA MOSTAFA NO. 78649 EXP. 09/30/15 CIVIL STATE OF CALIFORNIA 06/30/15

CITY OF PINOLE CALIFORNIA 1903

PINOLE/HERCULES
WATER POLLUTION
CONTROL PLANT UPGRADE
CLIENT PN

STRUCTURAL

SODIUM HYDROXIDE CHEMICAL STORAGE AND FEED PLANS

0 1" 2"

FILENAME	215786-77S101
SCALE	AS NOTED

SHEET **77S101**

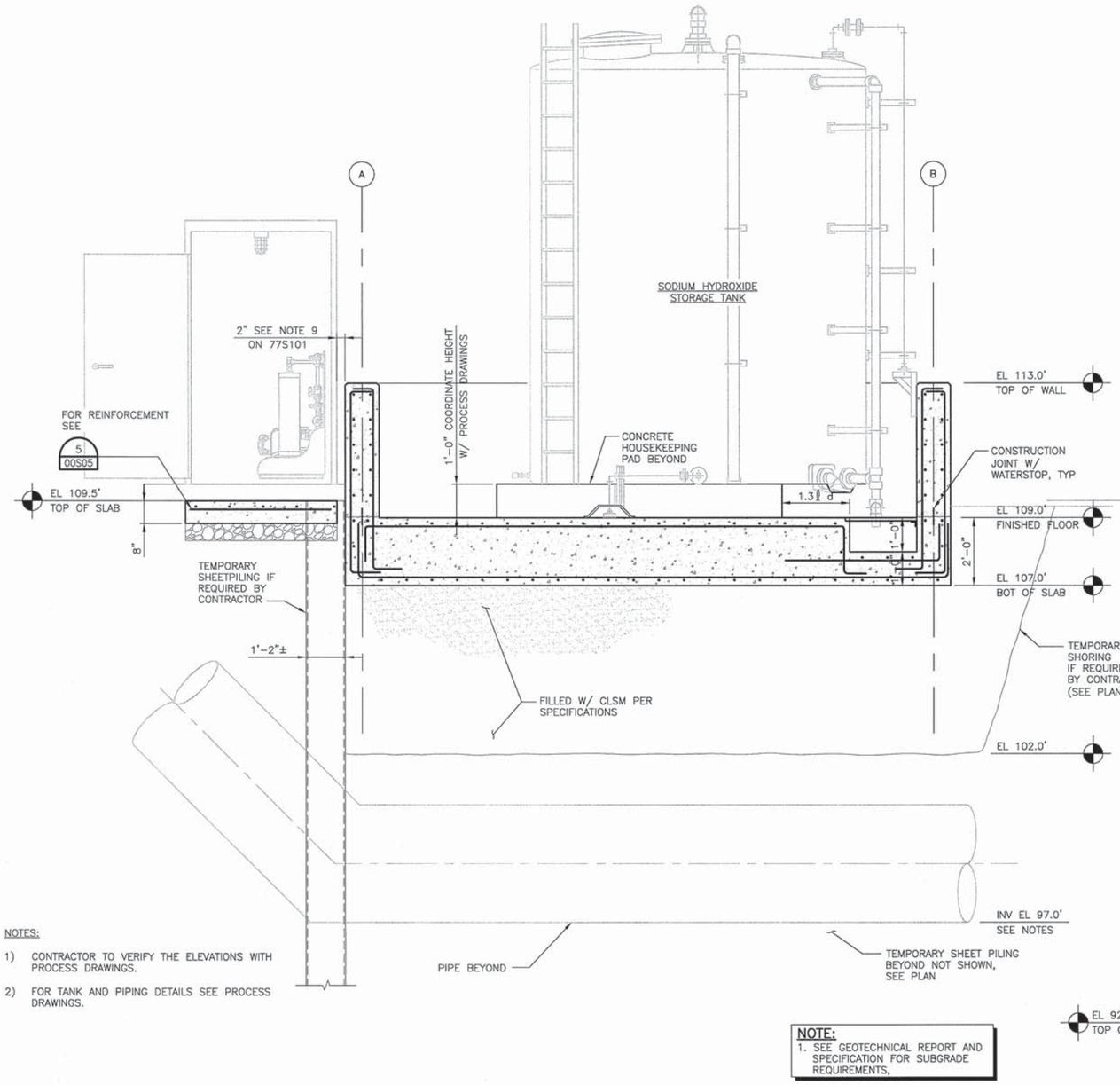

NOTES:

1) CONTRACTOR TO VERIFY THE ELEVATIONS WITH PROCESS DRAWINGS.
2) FOR TANK AND PIPING DETAILS SEE PROCESS DRAWINGS.

NOTE:
1. SEE GEOTECHNICAL REPORT AND SPECIFICATION FOR SUBGRADE REQUIREMENTS,

SECTION
1/2" = 1'-0"
A 77S101

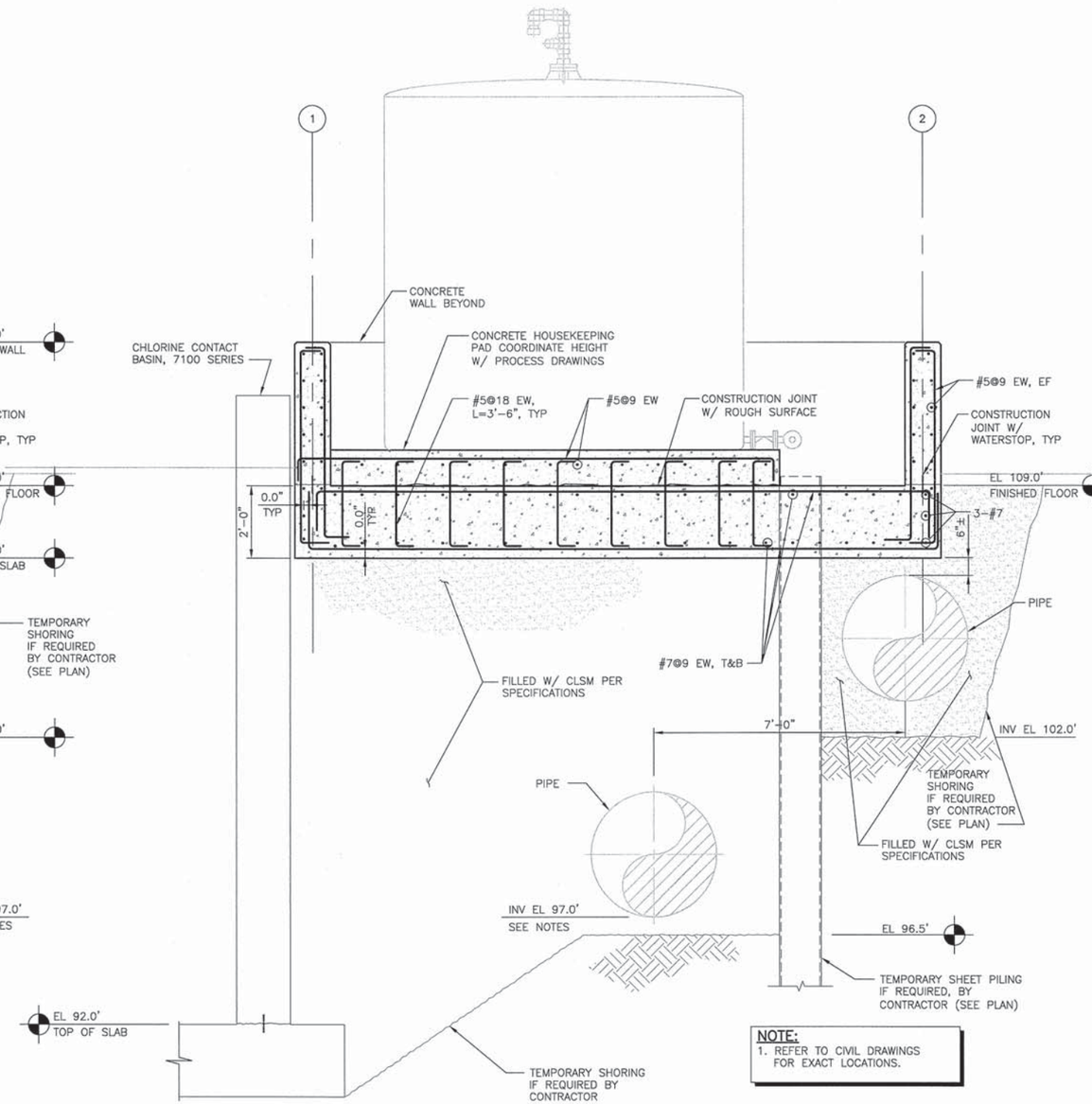

NOTE:
1. REFER TO CIVIL DRAWINGS FOR EXACT LOCATIONS.

SECTION
1/2" = 1'-0"
B 77S101

FILE: 215786-77S102.dwg
DATE: Jun 30, 2015-11:32:49am, ranider

HDR Engineering, Inc.

ISSUE	DATE	DESCRIPTION
A	JUNE 2015	ISSUED FOR BID

PROJECT MANAGER	C. OLSON
DESIGNED	M. MOSTAFA
DESIGNED	
CHECKED	O. TAVANGAR
DRAWN	
DATE	JUNE 30, 2015
PROJECT NUMBER	215786

REGISTERED PROFESSIONAL ENGINEER MOHAMMADREZA MOSTAFA NO. 78649 EXP. 09/30/15 CIVIL STATE OF CALIFORNIA 06/30/15

CITY OF PINOLE CALIFORNIA 1903

PINOLE/HERCULES
WATER POLLUTION
CONTROL PLANT UPGRADE
CLIENT PN

STRUCTURAL

SODIUM HYDROXIDE CHEMICAL STORAGE AND FEED SECTIONS

0 1" 2"

FILENAME	215786-77S102
SCALE	AS NOTED

SHEET **77S102**

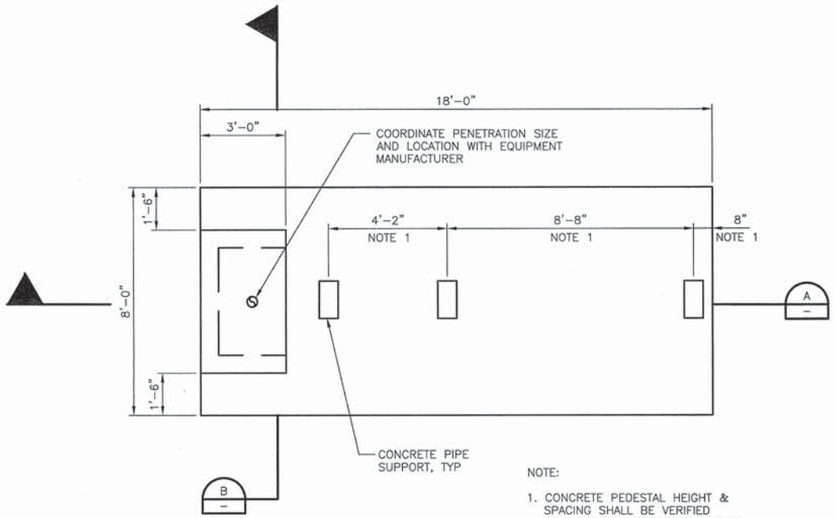

NOTE:

1. CONCRETE PEDESTAL HEIGHT & SPACING SHALL BE VERIFIED WITH PROCESS ENGINEER & PIPE MANUFACTURER BEFORE CONSTRUCTION.

GAS BURNER PLAN
3/8" = 1'-0"

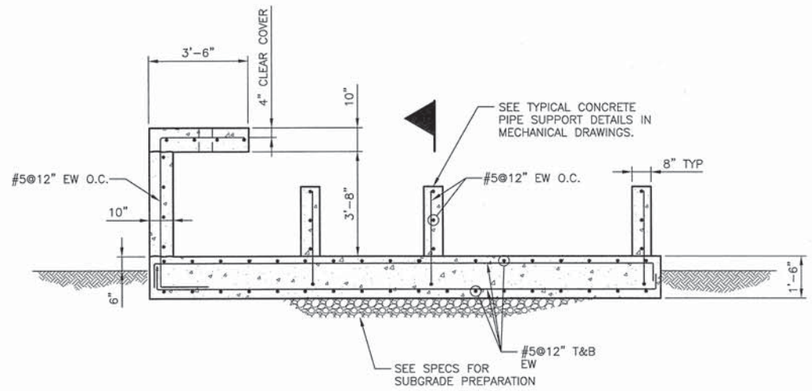

SECTION
3/8" = 1'-0"

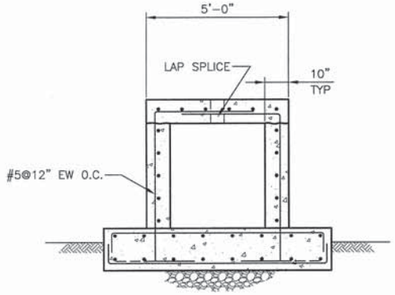

SECTION
3/8" = 1'-0"

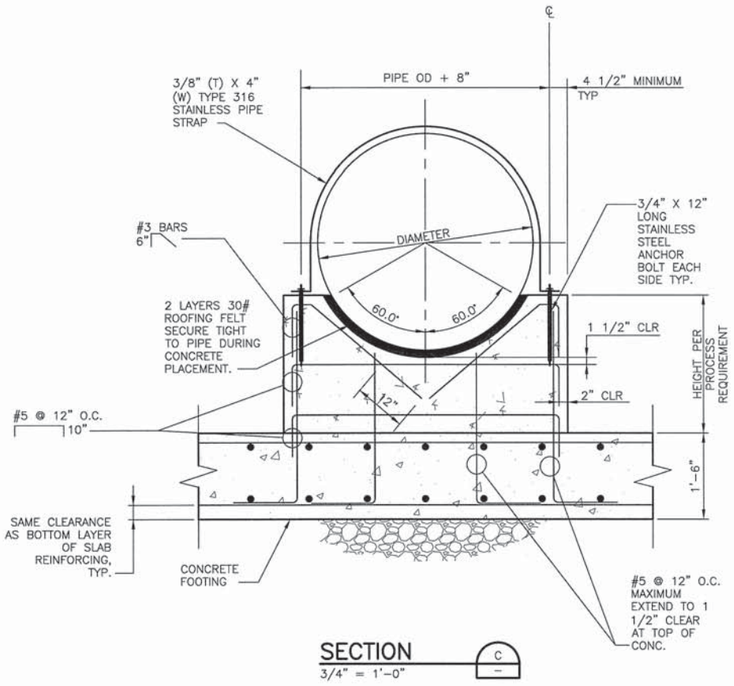

SECTION
3/4" = 1'-0"

FILE: 85S101.dwg
DATE: Jun 29, 2015-6:22:41pm, zhli

HDR Engineering, Inc.

ISSUE	DATE	DESCRIPTION
A	JUNE 2015	ISSUED FOR BID

PROJECT MANAGER	C. OLSON
DESIGNED	Z. LI
DESIGNED	
CHECKED	O. TAVANGAR
DRAWN	D. ELDREDGE
DATE	JUNE 30, 2015
PROJECT NUMBER	215786

REGISTERED PROFESSIONAL ENGINEER
ZHEN LI
NO. 74809
EXP. 12/31/15
6/30/2015
CIVIL
STATE OF CALIFORNIA

CITY OF PINOLE CALIFORNIA 1903

PINOLE/HERCULES
WATER POLLUTION
CONTROL PLANT UPGRADE
CLIENT PN

STRUCTURAL

DIGESTER GAS BURNER PLAN AND SECTIONS

0 1" 2"

FILENAME	85S101
SCALE	AS NOTED

SHEET **85S101**

NOTES:

1. FOR GENERAL NOTES SEE SHEET 00S01 AND 00S02.
2. FOR SPECIAL INSPECTION REQUIREMENTS, SEE 00S03 AND 00S04.
3. FOR TYPICAL CONCRETE DETAILS SEE 00S05 THROUGH 00S08.
4. FOR TYPICAL REINFORCING DETAILS SEE 00S09.
5. FOR EXACT LOCATION OF THE TANK PAD, SEE PROCESS DRAWINGS.
6. THE PENETRATION IN THE EXISTING SLAB SHOULD NOT HIT THE EXISITING REBARS.
7. MANUFACTURER TO DESIGN THE PUMP PADS AND ANCHOR BOLTS FOR PUMPS BASED ON THE THICKNESS OF THE PADS AND THE OPERATIONAL LOADS FROM THE PUMP.
8. 91P–X DENOTES 14" SQUARE PRE–STRESSED PRECAST CONCRETE PILES. SEE SHEET 00S10 FOR DETAILS AND SCHEDULE.

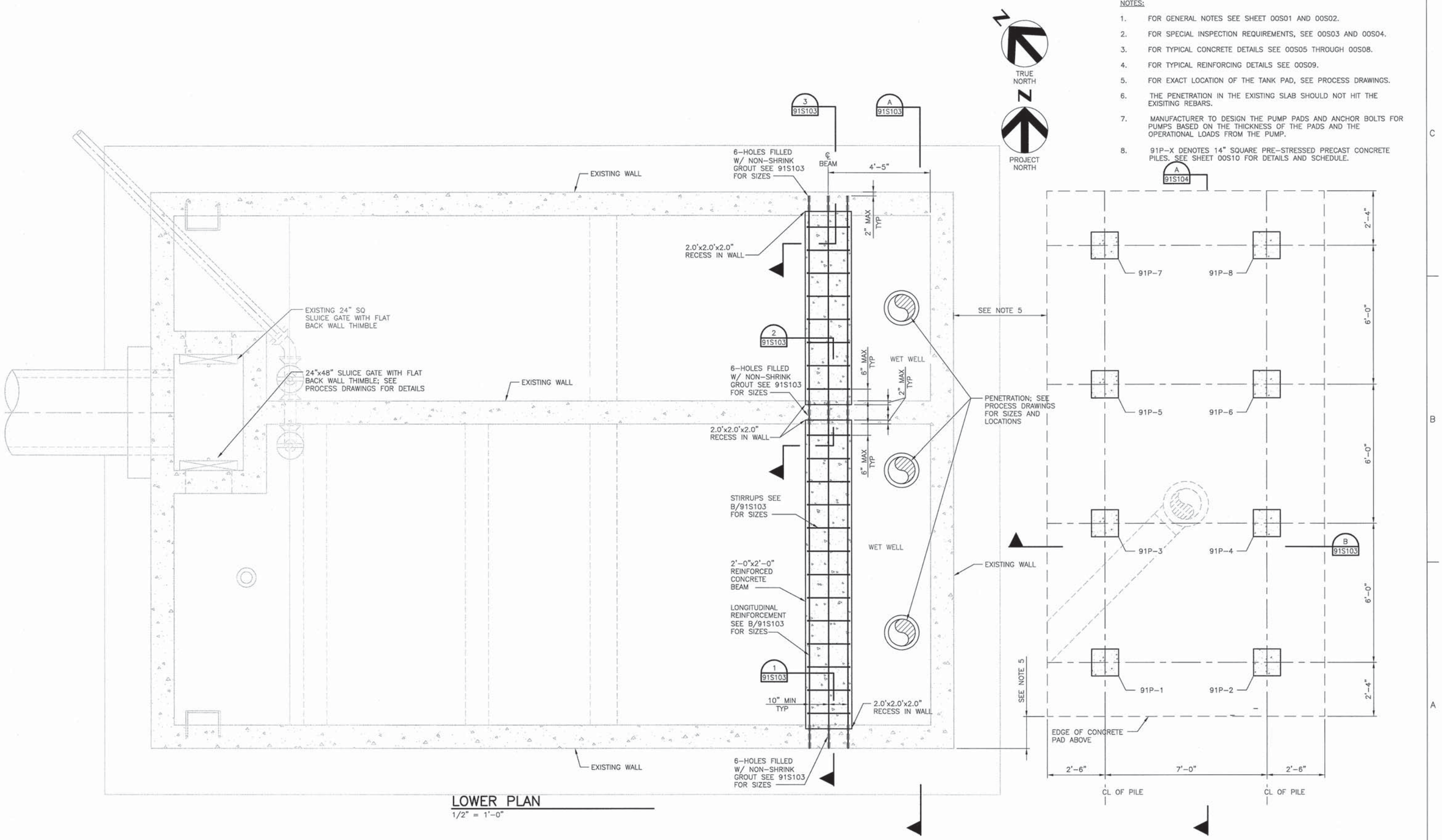

LOWER PLAN
1/2" = 1'–0"

FILE: 215786–91S101.dwg
DATE: Jun 30, 2015–11:34:53am, ranider

HDR Engineering, Inc.

ISSUE	DATE	DESCRIPTION
A	JUNE 2015	ISSUED FOR BID

PROJECT MANAGER	C. OLSON
DESIGNED	M. MOSTAFA
DESIGNED	
CHECKED	O TAVANGAR
DRAWN	D. ELDRIDGE
DATE	JUNE 30, 2015
PROJECT NUMBER	215786

REGISTERED PROFESSIONAL ENGINEER MORAMADREZA MOSTAFA NO. 78649 EXP. 09/30/15 CIVIL STATE OF CALIFORNIA 06/30/15

CITY OF PINOLE CALIFORNIA 1903

PINOLE/HERCULES
WATER POLLUTION
CONTROL PLANT UPGRADE
CLIENT PN

STRUCTURAL
EFFLUENT PUMPING STATION AND SURGE TANK
LOWER LEVEL
MODIFICATIONS PLAN

0 1" 2"

FILENAME	215786–91S101
SCALE	AS NOTED

SHEET **91S101**

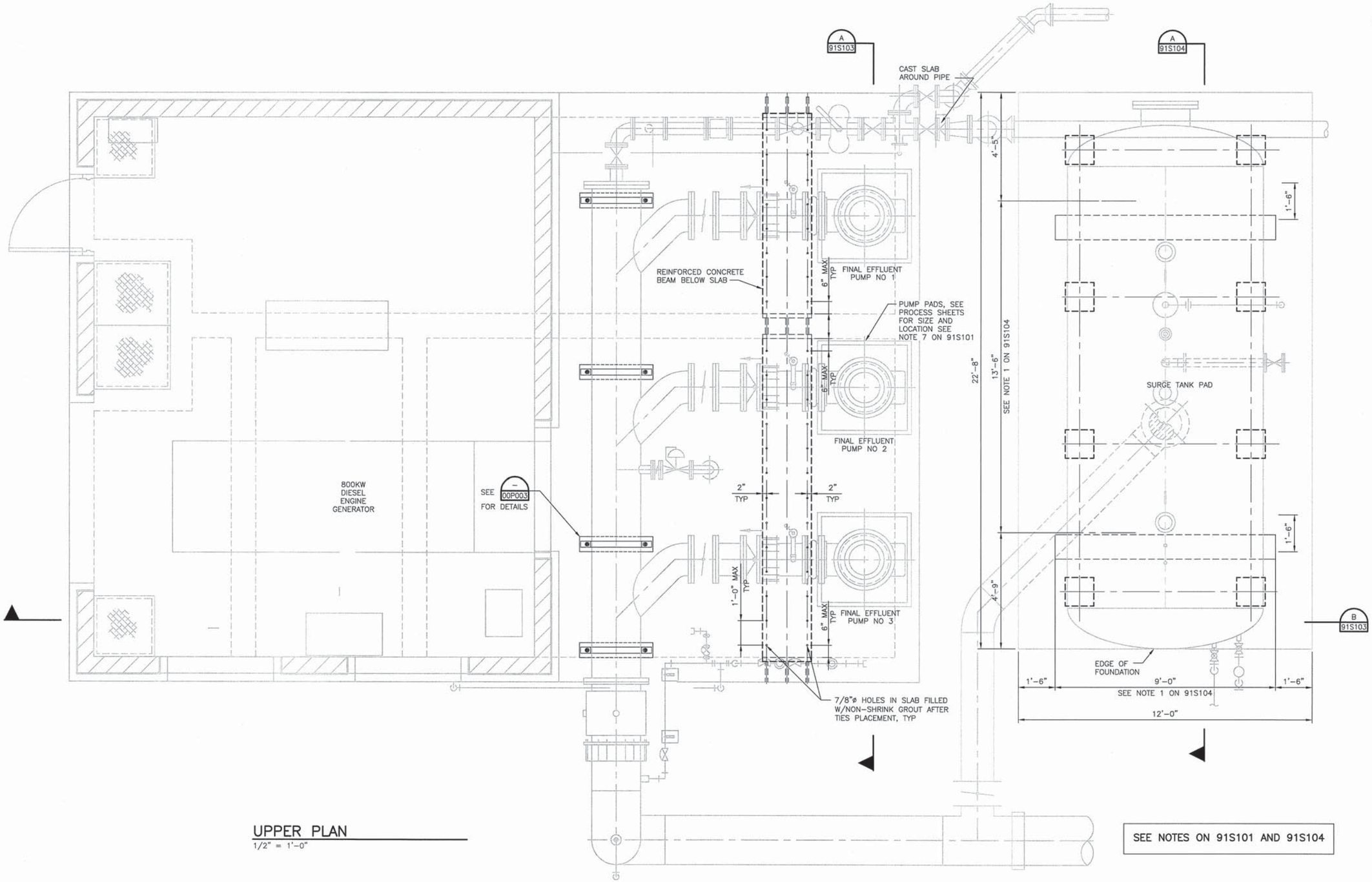

UPPER PLAN
1/2" = 1'-0"

SEE NOTES ON 91S101 AND 91S104

FILE: 215786-91S102.dwg
DATE: Jun 30, 2015- 9:19:09am, jwebb

HDR Engineering, Inc.

ISSUE	DATE	DESCRIPTION
A	JUNE 2015	ISSUED FOR BID

PROJECT MANAGER	C. OLSON
DESIGNED	M. MOSTAFA
DESIGNED	
CHECKED	O. TAVANGAR
DRAWN	D. ELDREDGE
DATE	JUNE 30, 2015
PROJECT NUMBER	215786

REGISTERED PROFESSIONAL ENGINEER
MOHAMMADREZA MOSTAFA
NO. 78649
EXP. 09/30/15
CIVIL
STATE OF CALIFORNIA
06/30/15

CITY OF PINOLE CALIFORNIA
1903

PINOLE/HERCULES
WATER POLLUTION
CONTROL PLANT UPGRADE
CLIENT PN

STRUCTURAL

EFFLUENT PUMPING STATION AND SURGE TANK
UPPER LEVEL MODIFICATIONS PLAN

0 1" 2"

FILENAME	215786-91S102
SCALE	AS NOTED

SHEET
91S102

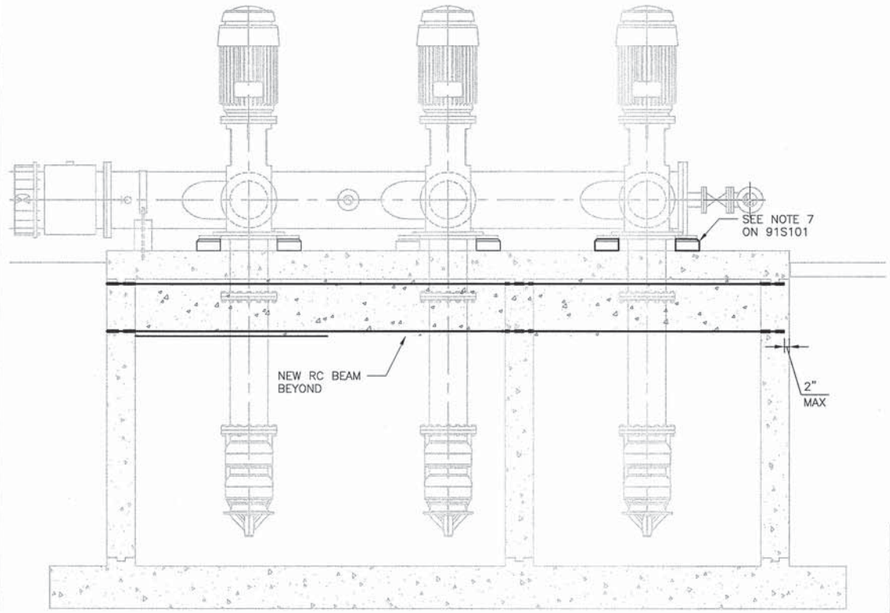

SECTION
3/8" = 1'-0"
A 91S101

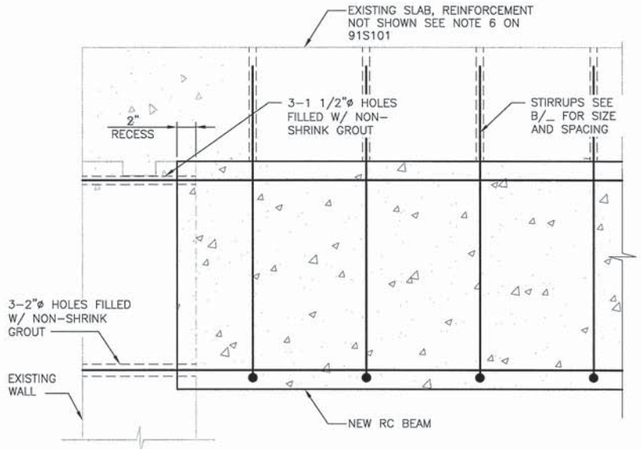

DETAIL
1 1/2" = 1'-0"
1 91S101

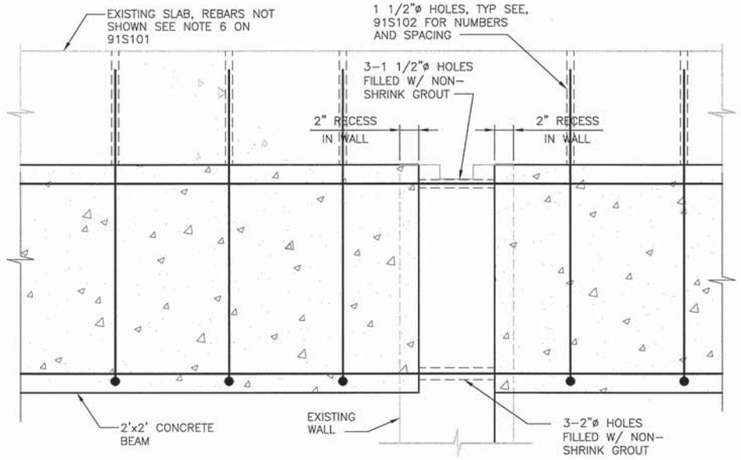

DETAIL
1 1/2" = 1'-0"
2 91S101

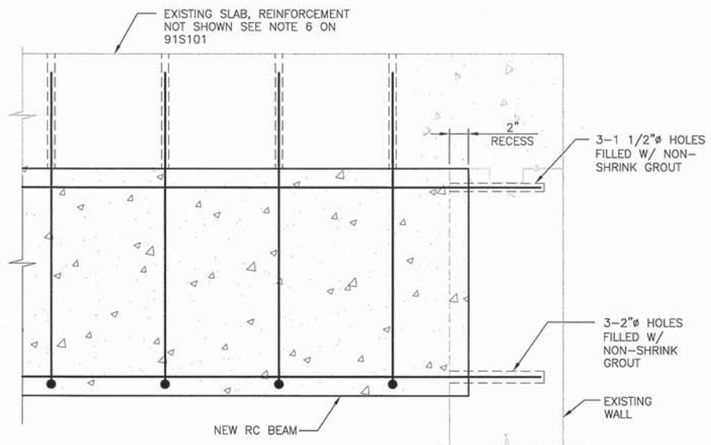

DETAIL
1 1/2" = 1'-0"
3 91S101

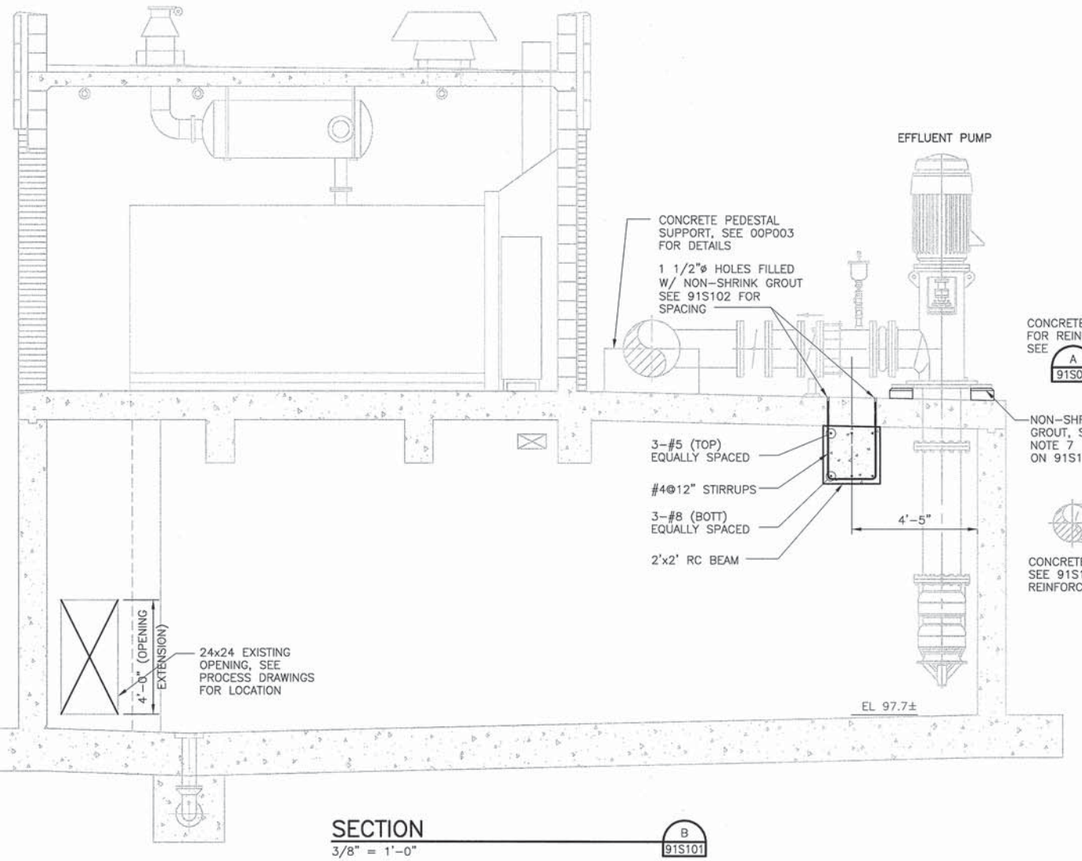

SECTION
3/8" = 1'-0"
B 91S101

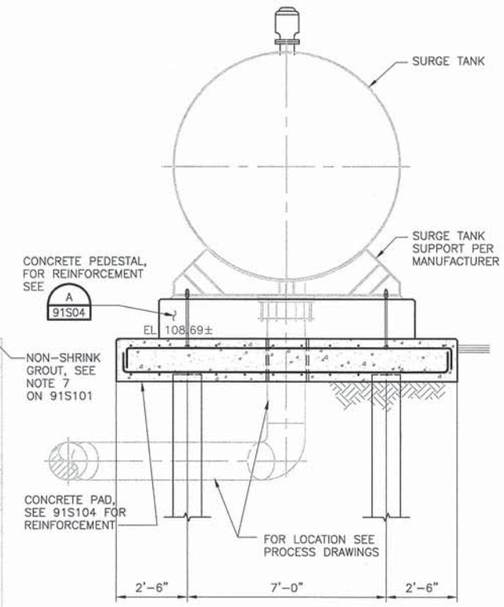

SEE NOTES ON 91S101 AND 91S104

FILE: 215786-91S103.dwg
DATE: Jun 30, 2015-11:35:35am, ranider

HDR Engineering, Inc.

ISSUE	DATE	DESCRIPTION
A	JUNE 2015	ISSUED FOR BID

PROJECT MANAGER	C. OLSON
DESIGNED	M. MOSTAFA
DESIGNED	O. TAVANGAR
CHECKED	C. OLSON
DRAWN	D. ELDREDGE
DATE	JUNE 30, 2015
PROJECT NUMBER	215786

REGISTERED PROFESSIONAL ENGINEER MORAMMADREZA MOSTAFA NO. 78649 EXP. 09/30/15 CIVIL STATE OF CALIFORNIA 06/30/15

CITY OF PINOLE CALIFORNIA 1903

PINOLE/HERCULES
WATER POLLUTION
CONTROL PLANT UPGRADE
CLIENT PN

STRUCTURAL

EFFLUENT PUMPING STATION AND SURGE TANK SECTIONS AND DETAILS

0 1" 2"

FILENAME	215786-91S103
SCALE	AS NOTED
SHEET	91S103

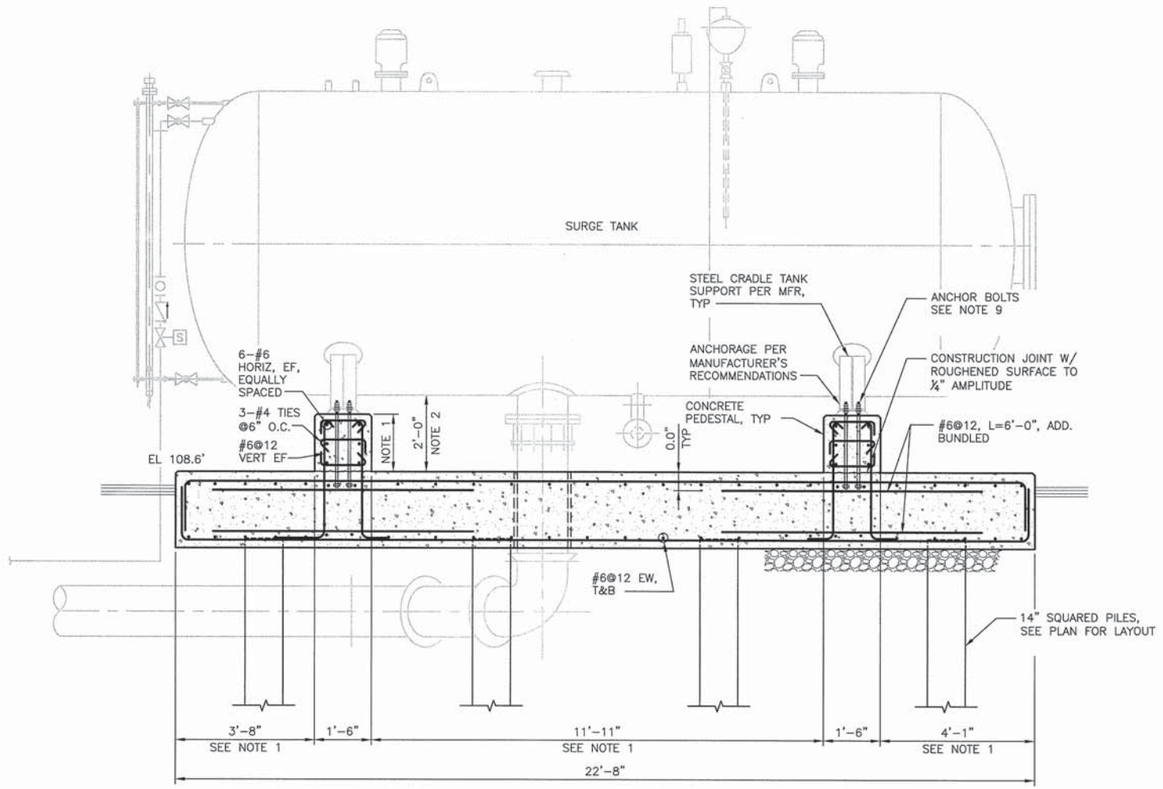

SECTION (A / 91S102)
1/2" = 1'-0"

NOTES:

1. LOCATION AND HEIGHT OF PEDESTAL IS DEFINED PER MANUFACTURERS RECOMMENDATIONS.
2. SEE PROCESS SHEETS FOR TANK ELEVATION AND PIPE LOCATIONS.
3. FOR GENERAL NOTES SEE SHEET 00S01 AND 00S02.
4. FOR SPECIAL INSPECTION REQUIREMENTS, SEE 00S03 AND 00S04.
5. FOR TYPICAL CONCRETE DETAILS SEE 00S05 THROUGH 00S08.
6. FOR TYPICAL REINFORCING DETAILS SEE 00S09.
7. ALL STEEL MEMBERS SHALL BE COATED PER SPECIFICATIONS.
8. FOR EXACT LOCATION OF THE TANK, SEE PROCESS DRAWINGS.
9. MANUFACTURER TO DESIGN THE ANCHORAGE FOR ALL POSSIBLE LOADS FROM TANK INCLUDING THE SURGE FORCES AND SEISMIC INDUCED LOADS.

FILE: 215786-91S104.dwg
DATE: Jun 30, 2015-8:45:09am, jwebb

HDR Engineering, Inc.

ISSUE	DATE	DESCRIPTION
A	JUNE 2015	ISSUED FOR BID

PROJECT MANAGER	C. OLSON
DESIGNED	M. MOSTAFA
DESIGNED	O. TAVANGAR
CHECKED	
DRAWN	D. ELDREDGE
DATE	JUNE 30, 2015
PROJECT NUMBER	215786

REGISTERED PROFESSIONAL ENGINEER THEODORE H. KONTOVICKAS NO. 29378 EXP. 06/30/17 MECHANICAL STATE OF CALIFORNIA 6/30/15

CITY OF PINOLE CALIFORNIA 1903

PINOLE/HERCULES
WATER POLLUTION
CONTROL PLANT UPGRADE
CLIENT PN

STRUCTURAL

EFFLUENT PUMP STATION
SURGE TANK, SECTION

0 1" 2"

FILENAME	215786-91S104
SCALE	AS NOTED
SHEET	91S104

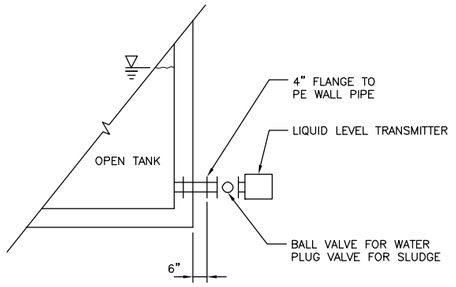

OPEN TANK FLANGE MOUNTED LIQUID LEVEL TRANSMITTER

1

NOT TO SCALE

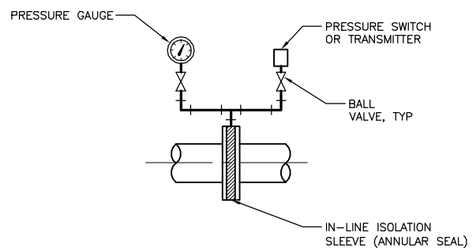

IN-LINE ISOLATION SLEEVE PRESSURE SWITCH/TRANSMITTER

2

NONE

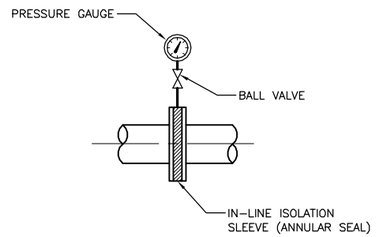

IN-LINE ISOLATION SLEEVE PRESSURE GAUGE

3

NONE

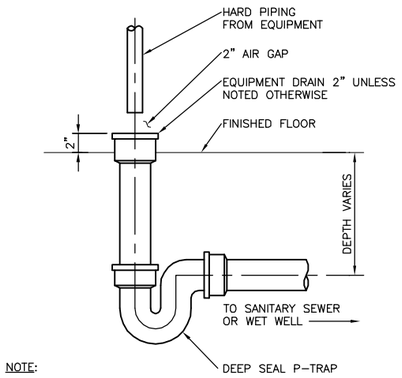

NOTE:

1. IF PROCESS DRAINS (NO SANITARY SEWAGE), P-TRAP NOT REQUIRED.

TRAPPED EQUIPMENT DRAIN

4

NTS

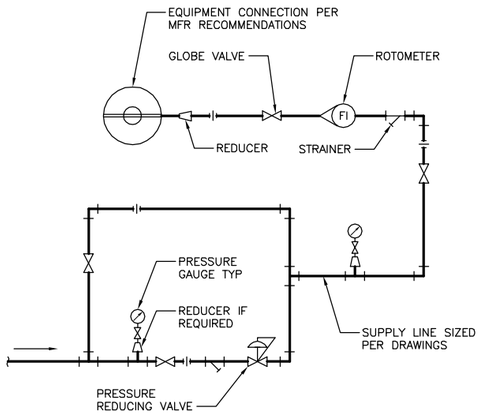

NOTE:

1. LOCATE WITHIN 2 FEET OF PUMP ON FRP MODULAR STRUT SUPPORT STRUCTURE.
2. ALL VALVES ARE BALL VALVES UNLESS SPECIFICALLY NOTED OTHERWISE.

SINGLE MECHANICAL SEAL WATER SYSTEM

5

NONE

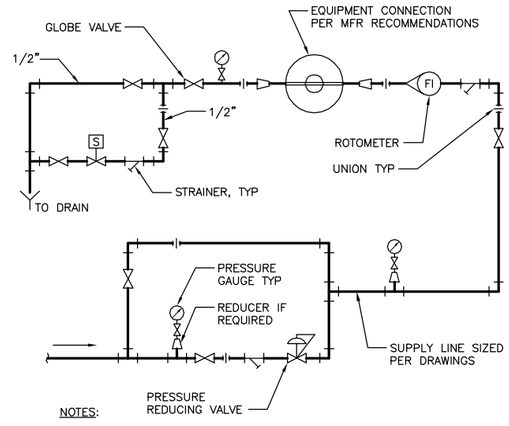

NOTES:

1. LOCATE WITHIN 2 FEET OF PUMP ON FRP MODULAR STRUT SUPPORT STRUCTURE.
2. ALL VALVES ARE BALL VALVES UNLESS SPECIFICALLY NOTED OTHERWISE.

DOUBLE MECHANICAL SEAL WATER SYSTEM

6

NONE

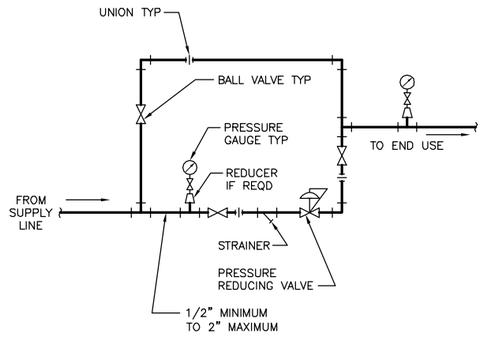

PRESSURE REDUCING STATION (PRS)

7

NONE

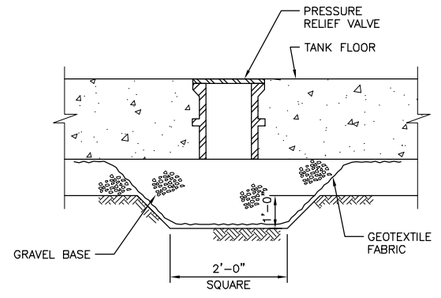

HYDROSTATIC PRESSURE RELIEF VALVE

8

NONE

FILE: 215786-00P001.dwg
DATE: Oct 06, 2015-4:14:57pm, rsnider

HDR Engineering, Inc.

ISSUE	DATE	DESCRIPTION
A	JUNE 2015	ISSUED FOR BID

PROJECT MANAGER	C. OLSON
DESIGNED	T. KONTONICKAS
DESIGNED	R. NATOLI
CHECKED	C. OLSON
DRAWN	B.DOWN
DATE	JUNE 30, 2015
PROJECT NUMBER	215786

REGISTERED PROFESSIONAL ENGINEER
CRAIG A. OLSON
NO. 39819
EXP. 12/31/15
CIVIL
STATE OF CALIFORNIA
06-30-15

CITY OF PINOLE CALIFORNIA 1903

PINOLE/HERCULES
WATER POLLUTION
CONTROL PLANT UPGRADE
CLIENT PN

PROCESS

STANDARD DETAILS 1

0 1" 2"

FILENAME	215786-00P001
SCALE	AS NOTED

SHEET **00P001**

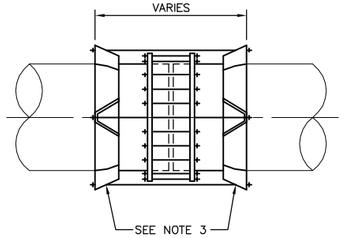

NOTES:

1. PROVIDE COUPLING WHERE NOTED ON DRAWINGS.
2. DESIGN HARNESS IN ACCORDANCE WITH AWWA M-11 MANUAL FOR STEEL PIPE.
3. LUGS FOR PIPE < 14" AND HARNESS RINGS FOR PIPE ≥ 14"

HARNESSED MECHANICAL COUPLING FOR STEEL PIPE

NONE — 1

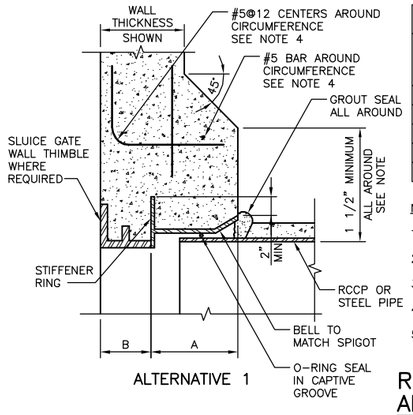

ALTERNATIVE 1

FITTING SCHEDULE		
PIPE DIAMETER	MINIMUM WALL FITTING LENGTH	MINIMUM WALL THIMBLE
	A	B
16"–36"	8"	8"
42"–54"	9"	8"
60"	10"	8"
96"	12"	NA

NOTES:

1. FOR REINFORCEMENT OF PENETRATION SEE STRUCTURAL DRAWINGS.
2. SEE SECTION 15060 FOR JOINT LENGTH REQUIREMENTS AT STRUCTURES.
3. TEMPORARILY FULLY SUPPORT AND CENTER PIPE PRIOR TO INSTALLATION OF MODULAR MECHANICAL SEAL SYSTEM.
4. THICKENED WALL SECTION AND CIRCUMFERENTIAL REBAR NOT REQUIRED WHEN WALL THICKNESS > A PLUS B.
5. FOR WALL THICKNESS LESS THAN 8 INCHES, PROVIDE SINGLE MODULAR MECHANICAL SEAL. FOR WALL THICKNESS EQUAL TO OR GREATER THAN 8 INCHES, PROVIDE TWO MODULAR MECHANICAL SEALS.

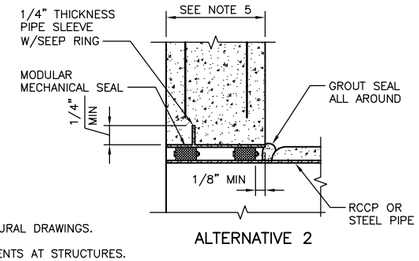

ALTERNATIVE 2

RCCP/STEEL WALL PIPE CONNECTION ALTERNATIVES 1 & 2

NOT TO SCALE — 2

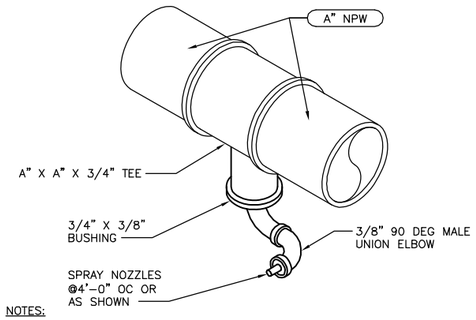

NOTES:

1. SPRAY DIRECTION SHALL BE SHOWN ON DRAWINGS.
2. SIZE OF NPW PIPE, A", AS SHOWN ON DRAWINGS.

SPRAY NOZZLE

NONE — 3

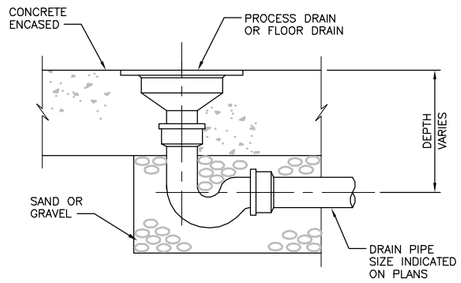

NOTE:
PROVIDE P-TRAPS ON ALL FLOOR DRAINS.

FLOOR DRAIN DETAIL

NTS — 4

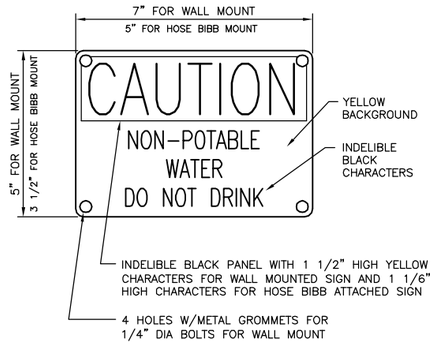

NOTES:

1. MATERIAL TO BE SIMI-RIGID BUTYRATE OR APPROVED EQUAL, AS MANUFACTURED BY W.H. BRADY CO., MILWAUKEE, WIS. 53201 OR EQUAL.
2. COLORS AND LETTER SIZES TO BE PER OSHA STANDARDS FOR CAUTION SIGNS.
3. PROVIDE AND INSTALL THIS SIGN AT ALL HOSE BIBB LOCATIONS DELIVERING NON-POTABLE WATER.
4. ATTACH TO HOSE BIBB WITH PLASTIC STRAPS AROUND VERTICAL RISER, OR SUSPEND FROM VALVE W/RETAINER CHAIN, AS DIRECTED BY OWNER.

NON-POTABLE WATER WARNING SIGN AT ALL HOSE BIBBS HB-1

NTS — 5

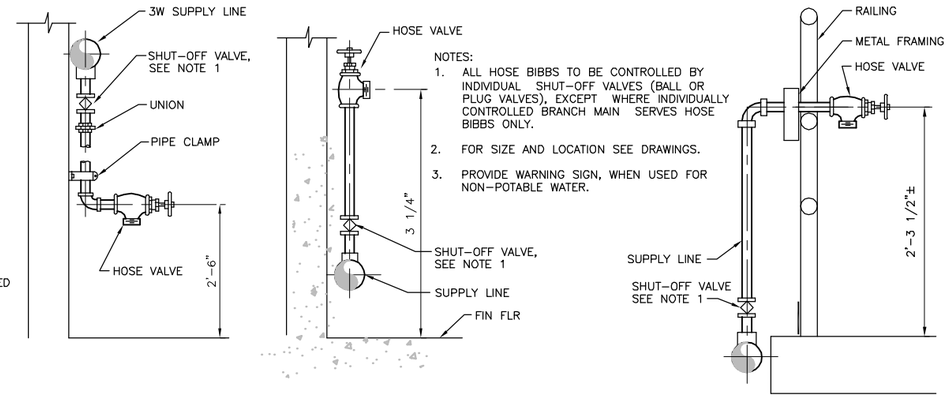

NOTES:

1. ALL HOSE BIBBS TO BE CONTROLLED BY INDIVIDUAL SHUT-OFF VALVES (BALL OR PLUG VALVES), EXCEPT WHERE INDIVIDUALLY CONTROLLED BRANCH MAIN SERVES HOSE BIBBS ONLY.
2. FOR SIZE AND LOCATION SEE DRAWINGS.
3. PROVIDE WARNING SIGN, WHEN USED FOR NON-POTABLE WATER.

HOSE BIBB HB-1

NTS — 6

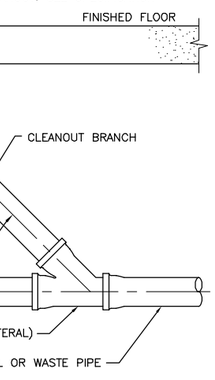

NOTES:

1. CLEANOUTS SHALL BE RECESSED 1/2" BELOW FINISHED SURFACE. COVER SHALL BE ACCESSABLE FOR GENERAL MAINTENANCE.

CLEANOUT THRU FLOOR

NTS — 7

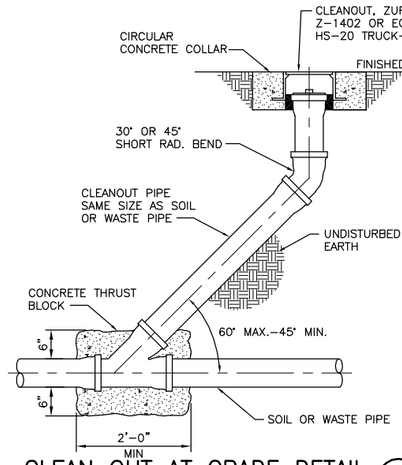

CLEAN OUT AT GRADE DETAIL

NTS — 8

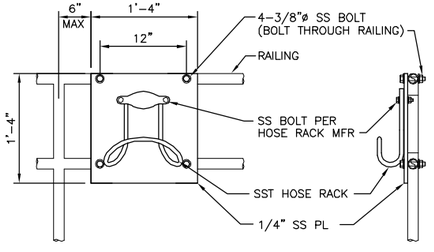

NOTE:
REMOVE ALL BURRS AND SHARP EDGES.

RAILING MOUNTED HOSE RACK (HR-1)

NTS — 9

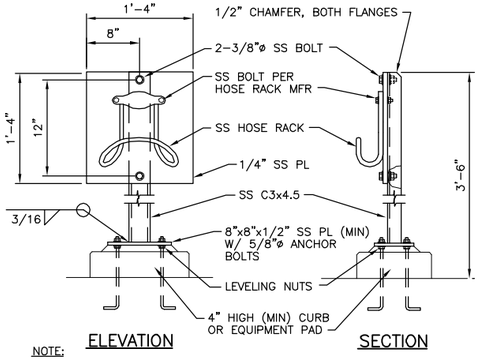

NOTE:
REMOVE ALL BURRS AND SHARP EDGES.

FLOOR MOUNTED HOSE RACK (HR-2)

NTS — 10

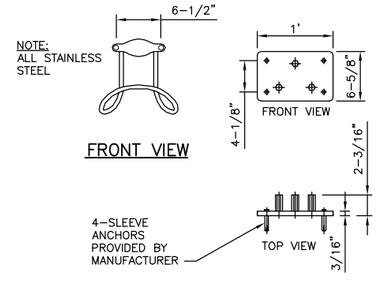

WALL MOUNTED HOSE RACK (HR-3)

NTS — 11

FILE: 215786-00P002.dwg
DATE: Oct 06, 2015-4:15:05pm, rsnider

HDR Engineering, Inc.

ISSUE	DATE	DESCRIPTION
A	JUNE 2015	ISSUED FOR BID

PROJECT MANAGER	C. OLSON
DESIGNED	T. KONTONICKAS
DESIGNED	R. NATOLI
CHECKED	C. OLSON
DRAWN	B.DOWN
DATE	JUNE 30, 2015
PROJECT NUMBER	215786

REGISTERED PROFESSIONAL ENGINEER THEODORE H. KONTONICKAS NO. 29378 EXP. 06/30/17 MECHANICAL STATE OF CALIFORNIA 06-30-15

CITY OF PINOLE CALIFORNIA 1903

PINOLE/HERCULES
WATER POLLUTION
CONTROL PLANT UPGRADE
CLIENT PN

PROCESS

STANDARD DETAILS 2

0 1" 2"

FILENAME	215786-00P002
SCALE	AS NOTED

SHEET
00P002

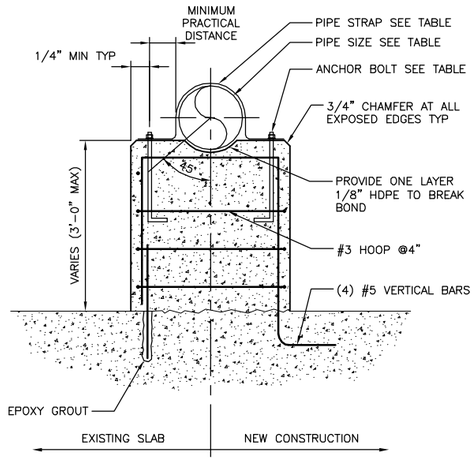

PIPE SIZE DIA	PIPE STRAP	ANCHOR BOLTS DIA	PEDESTAL THICKNESS
6"–12"	1/4"x2"	1/2"	12"
14"–24"	3/8"x2 1/2"	5/8"	16"
30"–48"	1/2"x3"	3/4"	24"

CONCRETE PEDESTAL SUPPORT
1
NOT TO SCALE

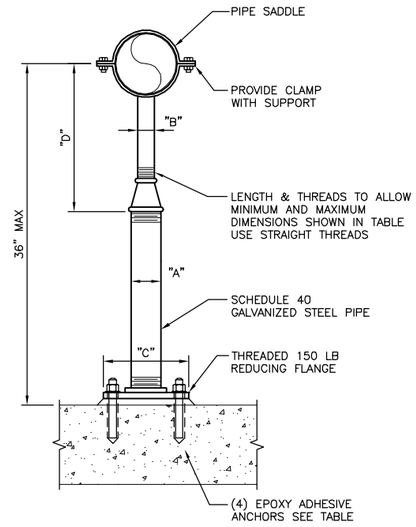

FLOOR PIPE SUPPORT SCHEDULE
DIMENSIONS IN INCHES

PIPE SIZE	"A"	"B"	"C"	"D" MINIMUM	"D" MAXIMUM	ANCHORS DIA	ANCHORS EMBED
≤ 2 1/2	2 1/2	1 1/2	9	8	13	5/8	5
3	2 1/2	1 1/2	9	8 1/2	13 1/2	5/8	5
3 1/2	2 1/2	1 1/2	9	8 1/2	13 1/2	5/8	5
4	3	2 1/2	9	9 1/2	14	5/8	5
6	3	2 1/2	9	10 1/2	15 1/2	5/8	5
8	3	2 1/2	9	11 1/2	16 1/2	5/8	5
10	3	2 1/2	9	13 1/2	18 1/2	5/8	5
12	3	2 1/2	9	15	19 1/2	5/8	5
14	4	3	11	16 1/2	20 1/2	3/4	6 5/8
16	4	3	11	17 1/2	22 1/2	3/4	6 5/8
18	6	3 1/2	13 1/2	19 1/2	24	3/4	6 5/8
20	6	3 1/2	13 1/2	21	25 1/2	3/4	6 5/8
24	6	4	13 1/2	23 1/2	28 1/2	3/4	6 5/8

ADJUSTABLE PIPE SUPPORT
2
NOT TO SCALE

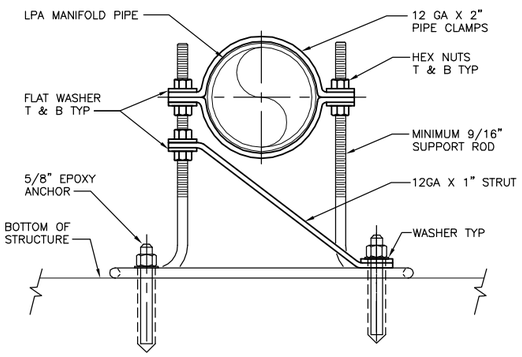

SUBMERGED LPA PIPING SUPPORT
3
NOT TO SCALE

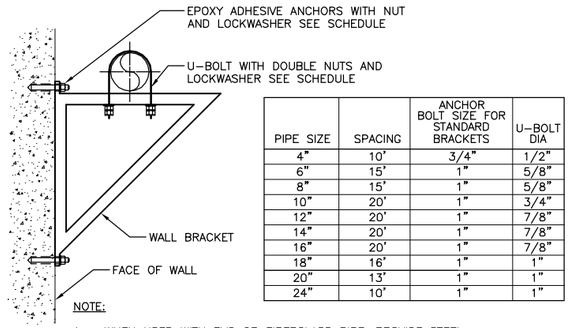

PIPE SIZE	SPACING	ANCHOR BOLT SIZE FOR STANDARD BRACKETS	U-BOLT DIA
4"	10'	3/4"	1/2"
6"	15'	1"	5/8"
8"	15'	1"	5/8"
10"	20'	1"	3/4"
12"	20'	1"	7/8"
14"	20'	1"	7/8"
16"	20'	1"	7/8"
18"	16'	1"	1"
20"	13'	1"	1"
24"	10'	1"	1"

NOTE:
1. WHEN USED WITH PVC OR FIBERGLASS PIPE, PROVIDE STEEL SHIELD AROUND PIPE AT CLAMP WITH LOOSE FIT; COPPER TUBES TO HAVE STRIP OF RUBBER FABRIC.

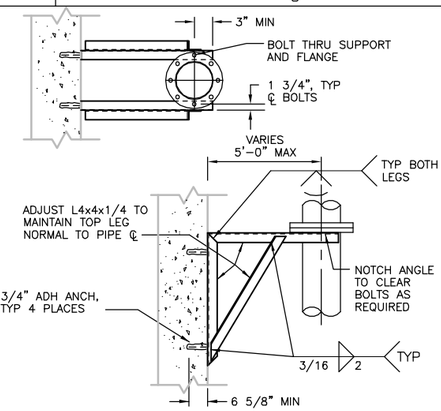

RISER PIPE SUPPORT
4
NTS

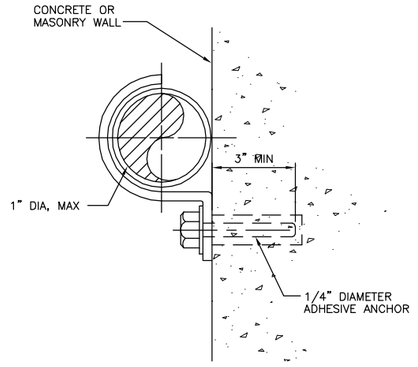

WALL BRACKET
5
NOT TO SCALE

ONE HOLE CLAMP
6
NTS

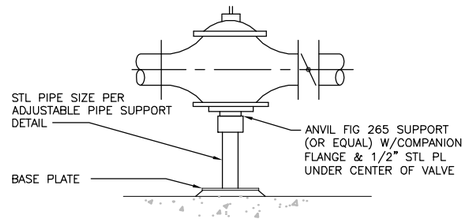

VALVE SUPPORT DETAIL
7
NTS

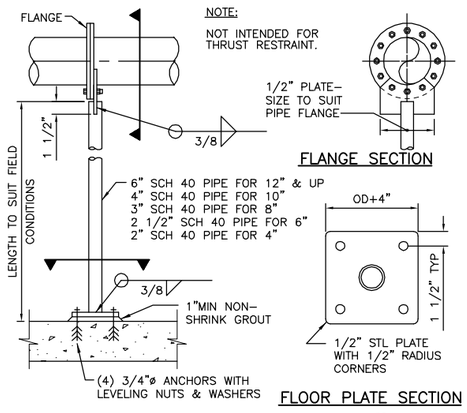

FLANGED PIPE SUPPORT
8
NTS

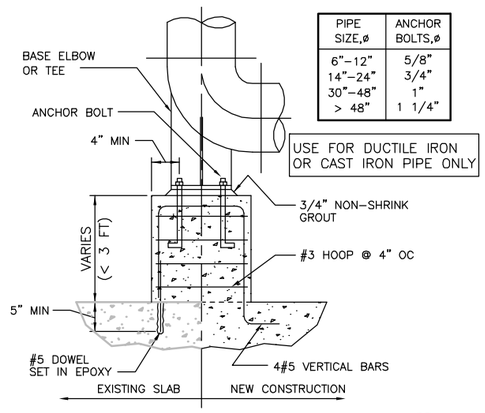

PIPE SIZE,ø	ANCHOR BOLTS,ø
6"–12"	5/8"
14"–24"	3/4"
30"–48"	1"
> 48"	1 1/4"

USE FOR DUCTILE IRON OR CAST IRON PIPE ONLY

BASE ELBOW PEDESTAL
9
NTS

PIPE SUPPORT MATERIAL SCHEDULE	
CORROSIVE AREAS:	MATERIAL
ALL WET AND OUTSIDE AREAS	316 STAINLESS STEEL
CHEMICAL AREAS	FRP
NON–CORROSIVE AREAS:	MATERIAL
INTERIOR AREAS	HOT DIPPED GALVANIZED STEEL

NOTES:
1. ALL ANCHOR BOLTS TO BE 316 SST REGARDLESS OF INSTALLED AREA.
2. ALL ANCHOR BOLTS TO BE EPOXY.

FILE: 215786-00P003.dwg
DATE: Oct 06, 2015-4:15:12pm, ranider

HDR Engineering, Inc.

ISSUE	DATE	DESCRIPTION
A	JUNE 2015	ISSUED FOR BID

PROJECT MANAGER	C. OLSON
DESIGNED	T. KONTONICKAS
DESIGNED	R. NATOLI
CHECKED	C. OLSON
DRAWN	B.DOWN
DATE	JUNE 30, 2015
PROJECT NUMBER	215786

REGISTERED PROFESSIONAL ENGINEER
THEODORE H. KONTONICKAS
NO. 29378
EXP. 06/30/17
MECHANICAL
STATE OF CALIFORNIA
06-30-15

CITY OF PINOLE CALIFORNIA 1903

PINOLE/HERCULES
WATER POLLUTION
CONTROL PLANT UPGRADE
CLIENT PN

PROCESS

STANDARD DETAILS 3

0 1" 2"

FILENAME	215786-00P003
SCALE	AS NOTED

SHEET
00P003

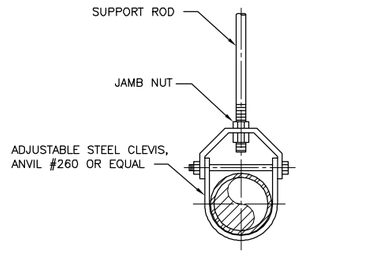

1/2" THROUGH 24" PIPE

PIPE HANGER

NTS

1

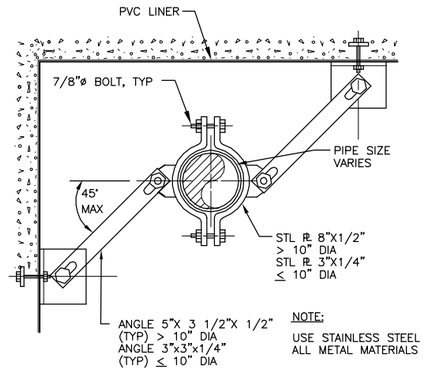

NOTE:

USE STAINLESS STEEL FOR ALL METAL MATERIALS

VERTICAL PIPE HANGER

NTS

2

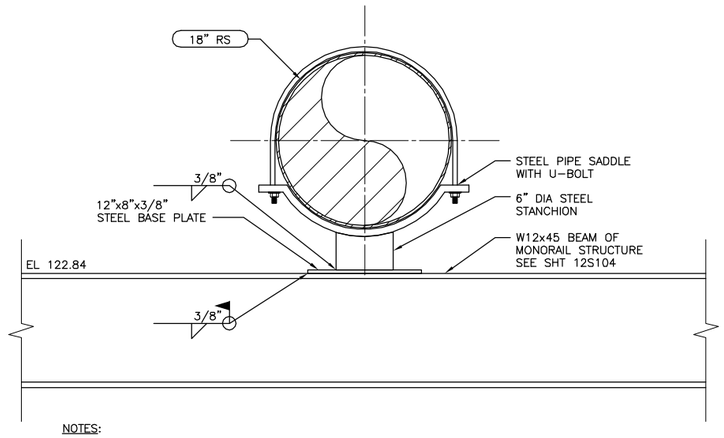

NOTES:

1. CONTRACTOR TO FABRICATE SADDLE STANCHION AND BASE PLATE TO FIT WITHIN CLEAR DIMENSION BETWEEN PIPE AND W12x45 BEAM.
2. SADDLE SUPPORT WITH U-BOLT TO BE SIMILAR TO ANVIL FIGURE 259.

18" RS PIPE SUPPORT FROM MONORAIL STRUCTURE

1 1/2" = 1'-0"

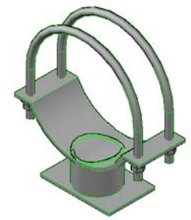

PERSPECTIVE VIEW

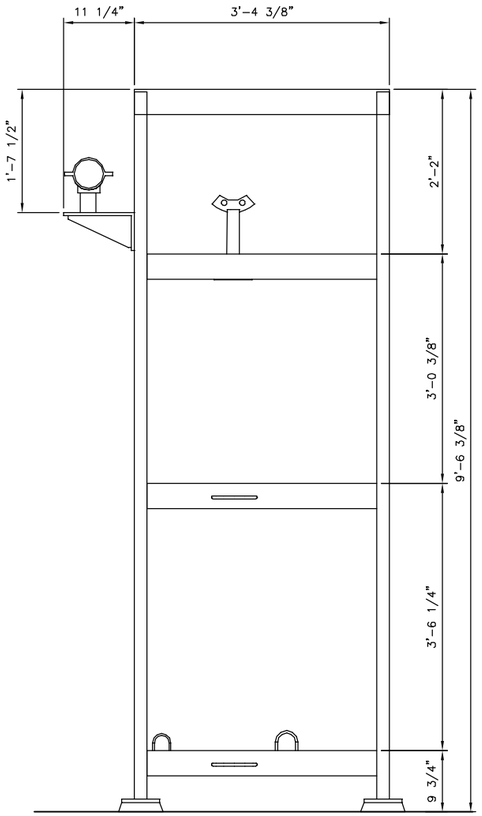

PIPE SUPPORT @ GRIT VORTEX WASHER

1" = 1'-0"

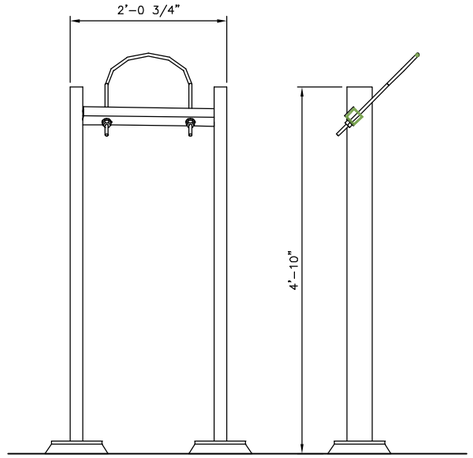

PIPE SUPPORT @ WASHER/COMPACTOR DISCHARGE

1" = 1'-0"

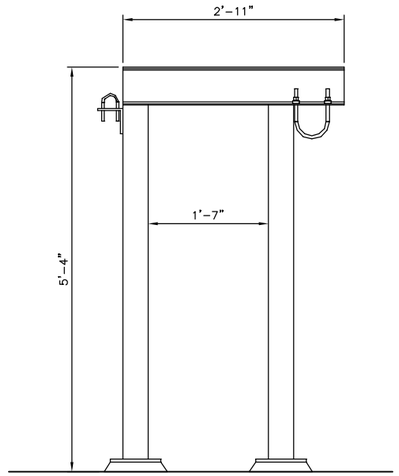

PIPE SUPPORT @ SCREW CONVEYOR

1" = 1'-0"

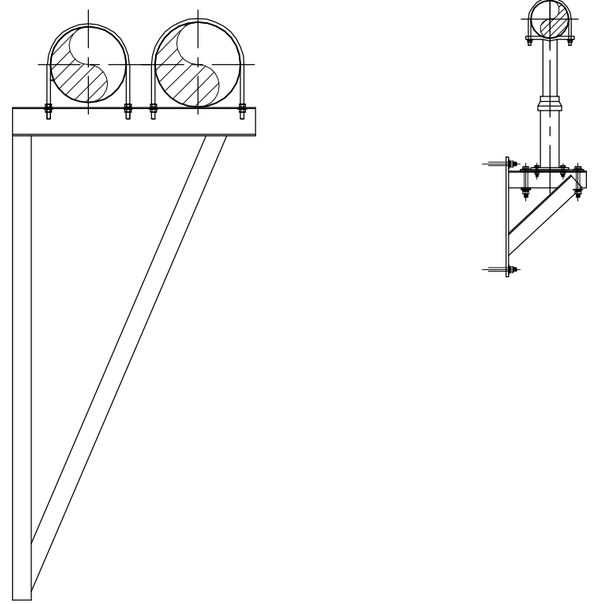

FILE: 215786-00P004.dwg
DATE: Oct 06, 2015-4:15:19pm, rsnider

HDR Engineering, Inc.

ISSUE	DATE	DESCRIPTION
A	JUNE 2015	ISSUED FOR BID

PROJECT MANAGER	C. OLSON
DESIGNED	T. KONTONICKAS
DESIGNED	
CHECKED	C. OLSON
DRAWN	B. DOWN
DATE	JUNE 30, 2015
PROJECT NUMBER	215786

REGISTERED PROFESSIONAL ENGINEER
THEODORE H. KONTONICKAS
NO. 29378
EXP. 06/30/17
MECHANICAL
STATE OF CALIFORNIA

CITY OF PINOLE CALIFORNIA 1903

PINOLE/HERCULES
WATER POLLUTION
CONTROL PLANT UPGRADE
CLIENT PN

PROCESS

STANDARD DETAILS 4

0 1" 2"

FILENAME	215786-00P004
SCALE	AS NOTED

SHEET **00P004**

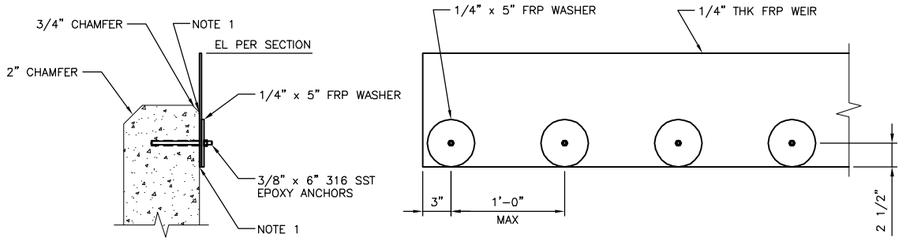

FRP RECTANGULAR WEIR PLATE DETAIL

NTS

1

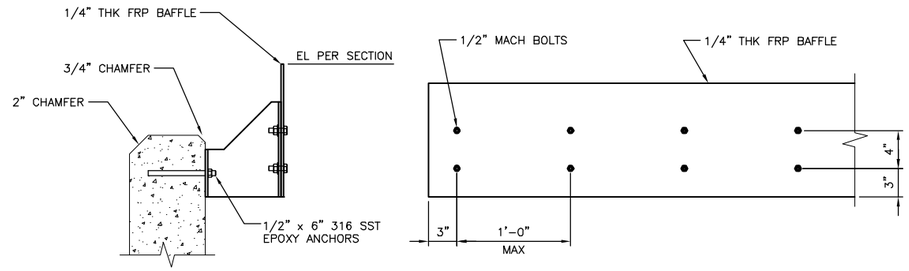

FRP BAFFLE DETAIL

NTS

2

NOTES:

1. SEAL BETWEEN FRP WEIR PLATE AND CONCRETE SURFACE WITH SILICONE SEALANT ON ALL FRP WEIR EDGES AND JOINTS.

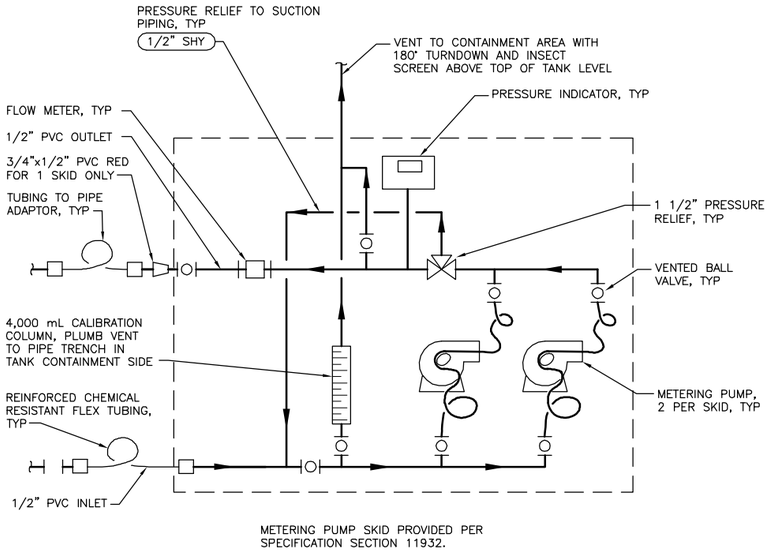

METERING PUMP SYSTEM SCHEMATIC

NTS

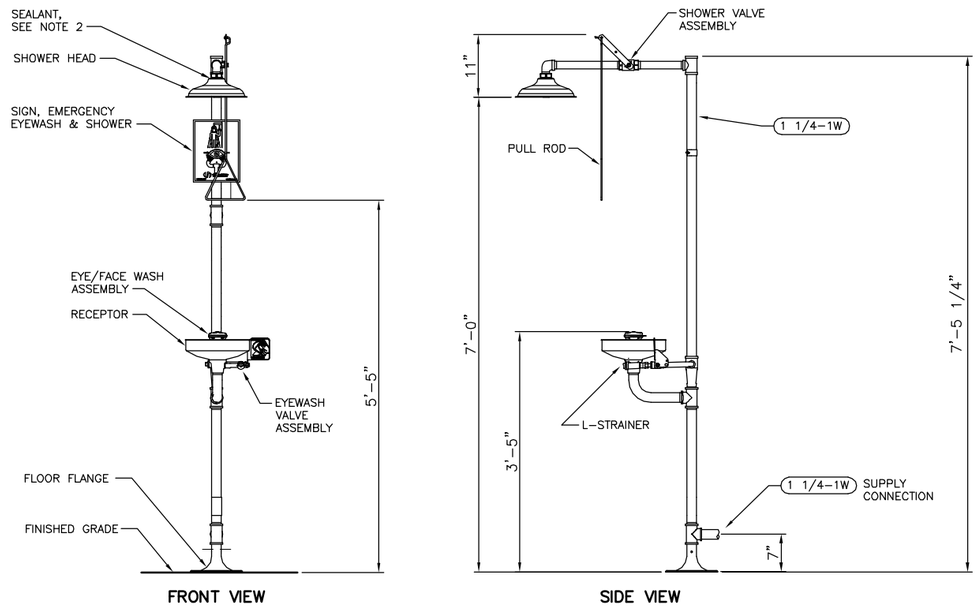

OUTDOOR EMERGENCY SHOWER & EYEWASH (ESEW)

NTS

NOTES:

1. EMERGENCY EYEWASH AND SHOWER IS HAWS MODEL 8300-8309. SEE SPECIFICATION SECTION 15440.
2. DO NOT USE REGULAR PIPE SEALANT. IF NECESSARY, USE DOW CORNING 832. PLACE 5 SMALL BEADS ON MALE THREADS JUST ABOVE FIRST THREAD.

FILE: 215786-00P005.dwg
DATE: Oct 06, 2015-4:15:25pm, rsnider

HDR Engineering, Inc.

ISSUE	DATE	DESCRIPTION
A	JUNE 2015	ISSUED FOR BID

PROJECT MANAGER	C. OLSON
DESIGNED	T. KONTONICKAS
DESIGNED	
CHECKED	C. OLSON
DRAWN	B. DOWN
DATE	JUNE 30, 2015
PROJECT NUMBER	215786

REGISTERED PROFESSIONAL ENGINEER THEODORE H. KONTONICKAS NO. 29378 EXP. 06/30/17 MECHANICAL STATE OF CALIFORNIA

CITY OF PINOLE CALIFORNIA 1903

PINOLE/HERCULES
WATER POLLUTION
CONTROL PLANT UPGRADE
CLIENT PN

PROCESS

STANDARD DETAILS 5

0 1" 2"

FILENAME	215786-00P005
SCALE	AS NOTED

SHEET **00P005**

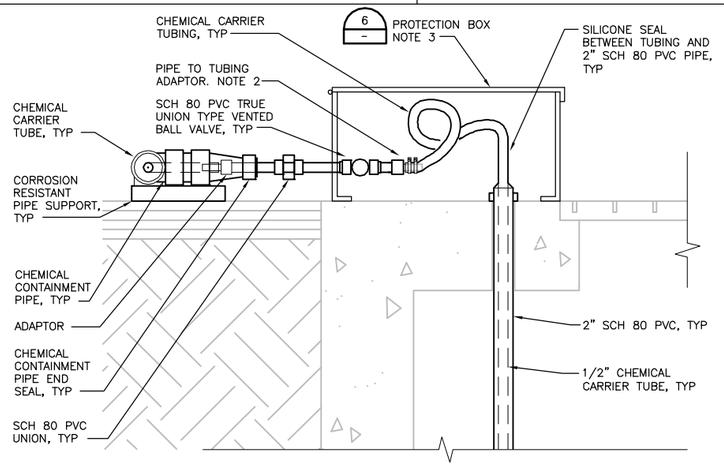

CHEMICAL DIFFUSER/PIPE INSTALLATION DETAIL 1

1 1/2" = 1'-0"

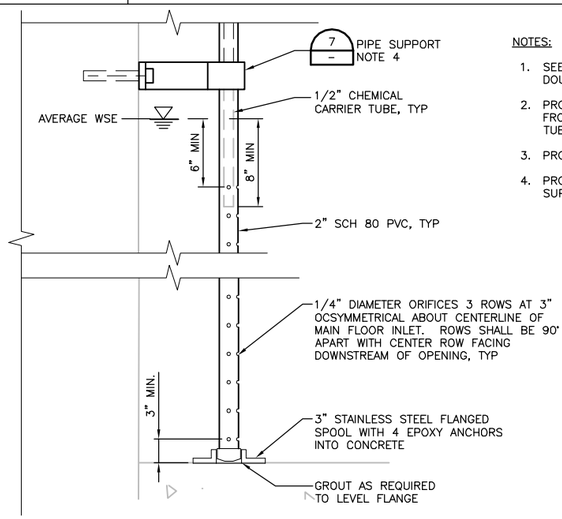

NOTES:

1. SEE PROCESS DWGS FOR CHEMICAL CARRIER AND DOUBLE CONTAINMENT PIPE SIZES.
2. PROVIDE PIPE TO TUBING ADAPTER TO TRANSIT FROM CHEMICAL PIPE TO ONE PIPE SIZE DOWN TUBING.
3. PROVIDE PROTECTION BOX AS NEEDED.
4. PROVIDE CHEMICAL AND CORROSION RESISTANT PIPE SUPPORT.

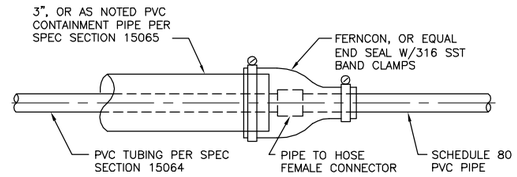

NOTES:

1. CONTRACTOR SHALL PROVIDE SCHEDULE 80 PVC PIPE REDUCERS ON CHEMICAL PIPE AS REQUIRED TO ACCOMODATE END SEAL DIMENSIONS.
2. TIGHT END SEAL CLAMPS PER MANUFACTURER'S RECOMMENDATIONS FOR PRESSURE TESTING OF CONTAINMENT PIPING.
3. DOUBLE CONTAINMENT PIPING SHALL BE PRESSURE TESTED PER SPECIFICATION SECTION 15060.

DOUBLE/SINGLE WALL PIPE TRANSITION DETAIL 2

NTS

NOTES:

1. SEE PLAN DWGS FOR SAMPLING LOCATIONS AND PIPING SERVICES.
2. INSTALL SAMPLE INTAKE HORIZONTALLY OR VERTICALLY AS SHOWN ON PROCESS DWGS. FOR VERTICAL MOUNTING, PROVIDE PIPE SUPPORT SIMILAR TO DETAIL 1 OF THIS SHEET.
3. INSERT SAMPLING TUBE INTO 6" SAMPLE INTAKE PIPE (SIMILAR ARRANGEMENT TO DETAIL 1 OF THIS SHEET) FOR RS COMPOSITE SAMPLING. TYP AT 3 LOCATIONS.

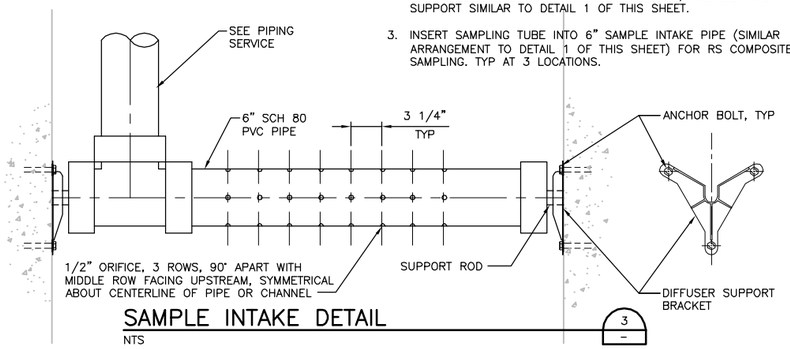

SAMPLE INTAKE DETAIL 3

NTS

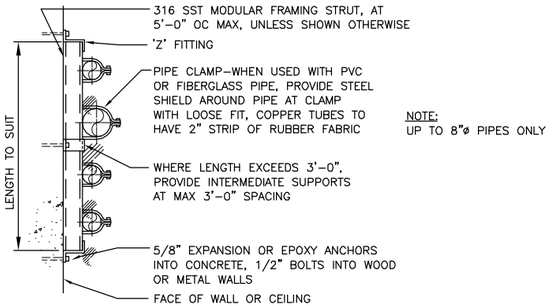

NOTE:
UP TO 8"ø PIPES ONLY

MODULAR STRUT
PIPE SUPPORT DETAIL 5

NTS

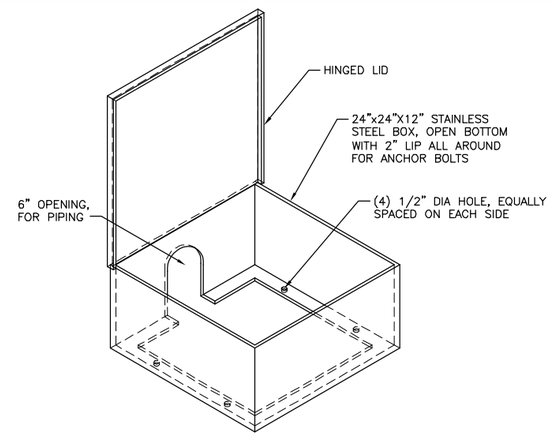

TUBING ENTRY PROTECTION BOX 6

NTS

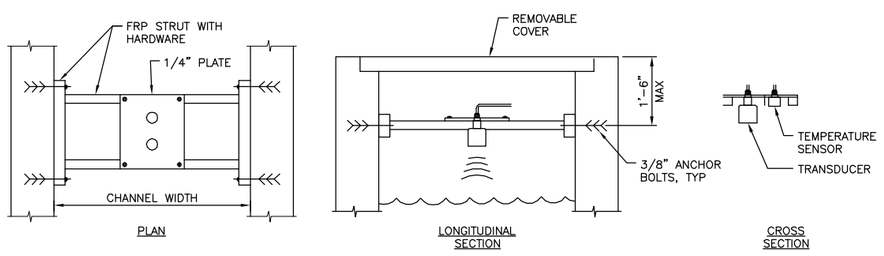

TRANSDUCER AND
TEMPERATURE SENSOR MOUNTING DETAIL 4

NTS

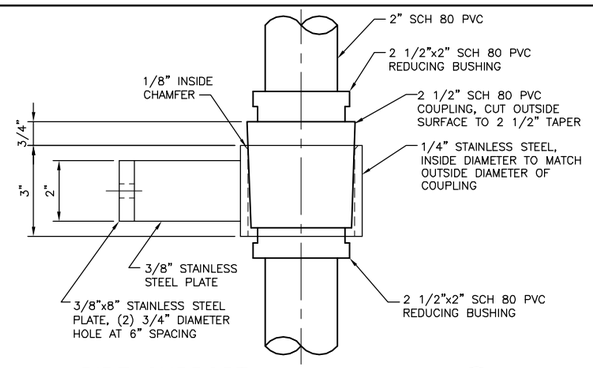

PIPE SUPPORT 7

NTS

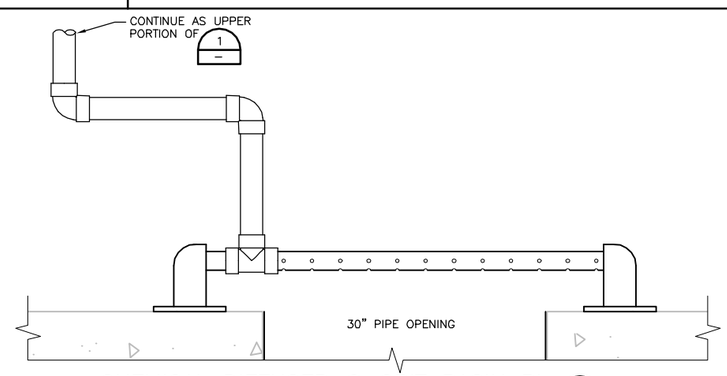

CHEMICAL DIFFUSER @ GRIT BASIN PI 7

NTS

FILE: 215786-00P006.dwg
DATE: Oct 06, 2015-4:15:31pm, rsnider

HDR Engineering, Inc.

ISSUE	DATE	DESCRIPTION
A	JUNE 2015	ISSUED FOR BID

PROJECT MANAGER	C. OLSON
DESIGNED	T. KONTONICKAS
DESIGNED	
CHECKED	C. OLSON
DRAWN	B. DOWN
DATE	JUNE 30, 2015
PROJECT NUMBER	215786

REGISTERED PROFESSIONAL ENGINEER
CRAIG A. OLSON
NO. 39819
EXP. 12/31/15
CIVIL
STATE OF CALIFORNIA
06-30-15

CITY OF PINOLE CALIFORNIA 1903

PINOLE/HERCULES
WATER POLLUTION
CONTROL PLANT UPGRADE
CLIENT PN

PROCESS

STANDARD DETAILS 6

0 1" 2"

FILENAME	215786-00P006
SCALE	AS NOTED

SHEET
00P006

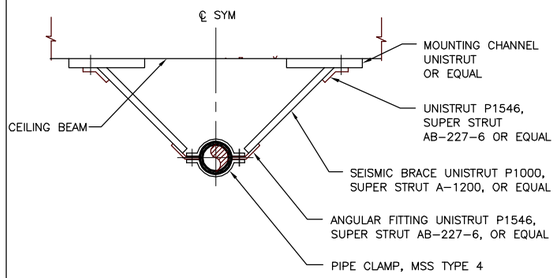

TYPE A SEISMIC LATERAL BRACING

NTS

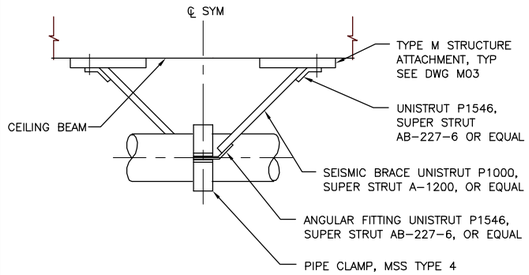

TYPE A SEISMIC LONGITUDINAL BRACING

TYPE A SEISMIC LONGITUDINAL BRACING

NTS NTS

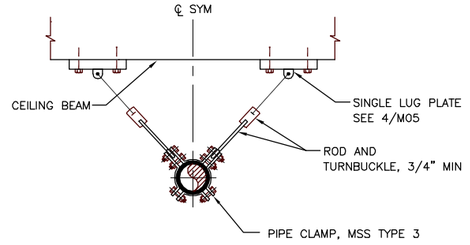

TYPE B SEISMIC LATERAL BRACING

NTS

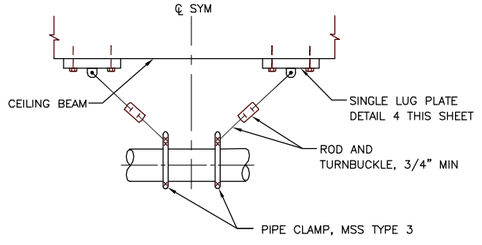

TYPE B SEISMIC LATERAL BRACING

NTS

TABLE C – PIPE SPAN FOR SEISMIC BRACING		
NORMAL PIPE SIZES (INCHES)	MAXIMUM PIPE SPAN (FEET)	ROD SIZE (INCHES)
2	15	3/8
2–1/2	15	3/8
3	15	3/8
4	15	3/8
6	20	1/2
8	20	5/8
10	30	4/5
12	30	1
14	30	1
16	35	1
18	35	1

TABLE D – HANGER TEMPERATURE AND MATERIALS FOR SEISMIC BRACING											
X INDICATES PIPE HANGERS SUITABLE FOR SEISMIC BRACING AT CONDITIONS LISTED BELOW	SEE DWG M02 FOR PIPE HANGER TYPE										
	1	2	3	4	5	6	7	8	9	10	11
SERVICE TEMPERATURE											
33\F–59\F OR INSULATED			X						X		X
120\F–450\F UNINSULATED	X	X	X			X	X		X	X	X
60\F–119\F	X	X	X			X	X		X	X	X
PIPING MATERIALS											
STEEL	X	X	X			X	X		X		X
COPPER		X				X	X				
PLASTIC	X	X				X	X				X
CAST IRON	X	X				X	X			X	X

SEISMIC BRACING NOTES:

1. ALL PIPES SHALL BE BRACED TO RESIST LATERAL AND LONGITUDINAL SEISMIC LOADS IN ACCORDANCE WITH SPECIFICATION SECTION 15097.
2. SEE TABLE 'C' FOR MAXIMUM SPACING. AND PIPE SIZES.
3. SEE TABLE 'D' FOR ACCEPTABLE PIPE HANGERS.
4. PROVIDE 1/16" THICK NEOPRENE ISOLATION BETWEEN COPPER PIPING AND HANGERS.
5. MATERIAL: ALL COMPONENTS OF SEISMIC BRACING SHALL BE FABRICATED OF TYPE 316 STAINLESS STEEL.

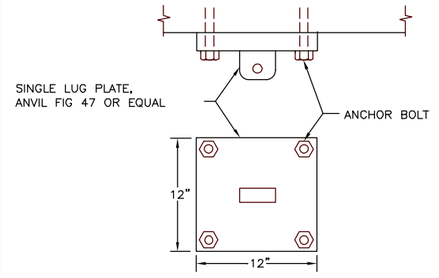

MAXIMUM ALLOWABLE LOAD:			
PLATE THICKNESS	ROD SIZE	BOLT SIZE	LOAD
3/4"	1"	3/4"	4960 LBS
1"	1 1/4"	7/8"	8000 LBS
1"	1 1/2"	1"	11630 LBS

ATTACH ROD TO TYPE 316 STAINLESS STEEL PLATE WITH FORGED TYPE 316 STAINLESS STEEL CLEVIS, ANVIL FIG 299 OR EQUAL

DETAIL 4

NTS

FILE: 215786-00P007.dwg
DATE: Oct 06, 2015-4:15:36pm, rsnider

HDR Engineering, Inc.

ISSUE	DATE	DESCRIPTION
A	JUNE 2015	ISSUED FOR BID

PROJECT MANAGER	C. OLSON
DESIGNED	T. KONTONICKAS
DESIGNED	
CHECKED	C. OLSON
DRAWN	R. SNIDER
DATE	JUNE 30, 2015
PROJECT NUMBER	215786

REGISTERED PROFESSIONAL ENGINEER THEODORE H. KONTONICKAS NO. 29378 EXP. 06/30/17 MECHANICAL STATE OF CALIFORNIA 06-30-15

CITY OF PINOLE CALIFORNIA 1903

PINOLE/HERCULES WATER POLLUTION CONTROL PLANT UPGRADE CLIENT PN

PROCESS

STANDARD DETAILS 7

0 1" 2"

FILENAME	
SCALE	NOTED

SHEET **00P007**

NOTES:

1. MANHOLE IS CLASSIFIED AS A CLASS 1, DIV. 1 AREA. CONDUITS THAT ENTER MANHOLE FOR ULTRASONIC TRANSDUCER REQUIRE SEALANT FITTINGS. CABLE FOR TRANSDUCER CAN BE OPEN TO OUTSIDE ATMOSPHERE FROM MANHOLE TO TRANSMITTER AND CONDUIT ENTERING MANHOLE BE PACKED WITH PUTTY IN LIEU OF SEALANT FITTING.
2. LOCATE CENTERLINE OF SENSOR 36.3" UPSTREAM OF BEGINNING OF FLUME THROAT AT UPSTREAM SIDE OF FLUME, COORDINATE WITH FIBERGLASS GRATING.
3. SEE SPECIFICATION SECTION 13900.
4. SEE CIVIL GRADING AND PAVING PLANS FOR SURFACE FINISH ADJACENT TO PARSHALL FLUMES.
5. COORDINATE FINAL RIM ELEVATION WITH SITE GRADING AND PAVING PLANS.

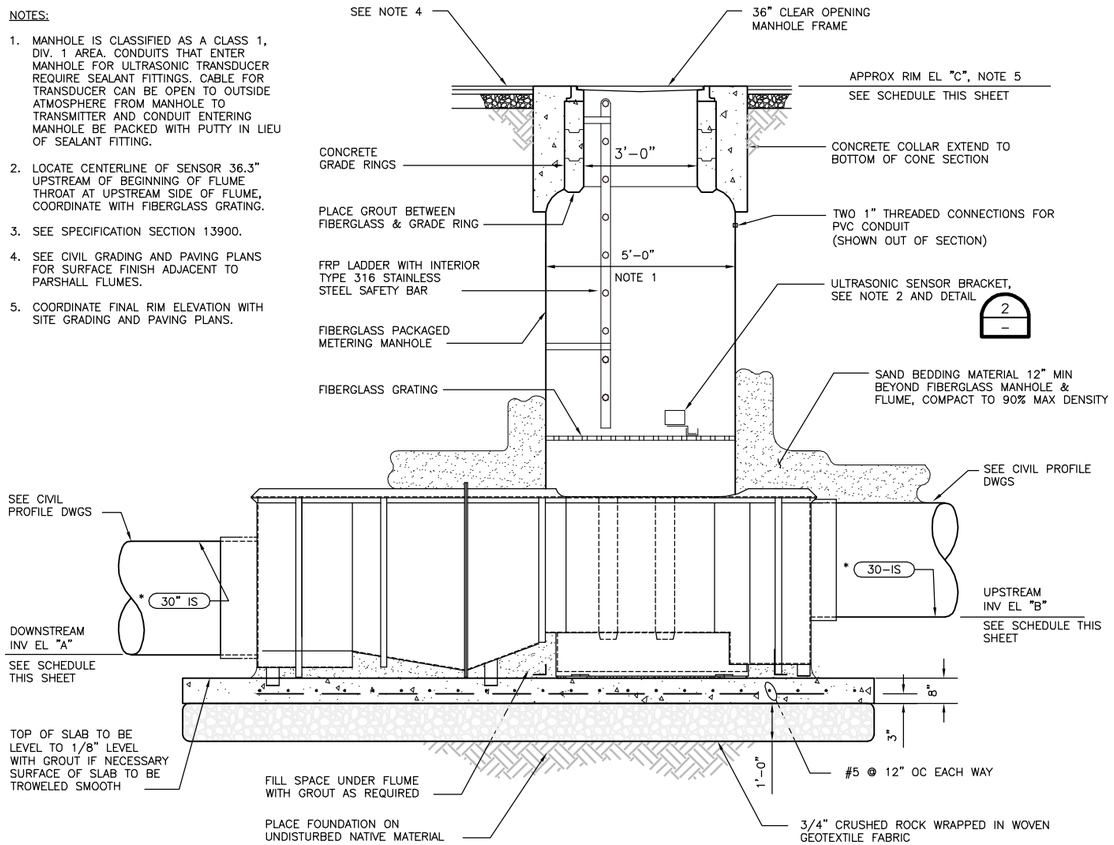

SECTION
A
NTS

ELEVATION SCHEDULE			
FLUME	ELEVATION "A"	ELEVATION "B"	ELEVATION "C"
HERCULES INFLUENT SEWER	EL 99.21	EL 99.71	EL 108.92
PINOLE INFLUENT SEWER	EL 97.54	EL 98.04	EL 108.40
PLANT DRAIN	EL 98.34	EL 98.44	EL 109.21

* PLANT DRAIN FLUME TO BE 12" PARSHALL FLUME, NOT 18". DIMENSIONS FOR PLANT DRAIN FLUME WILL BE SLIGHTLY REDUCED PER MANUFACTURER SIZING. PIPE SIZES PER CIVIL DRAWINGS.

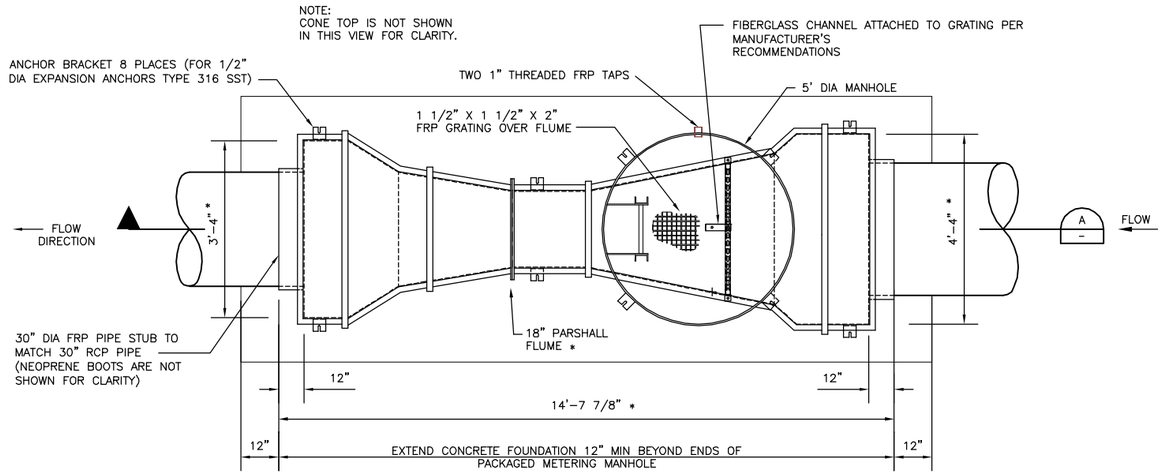

PLAN
NTS

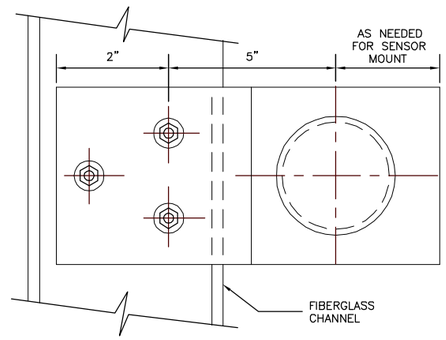

PLAN VIEW

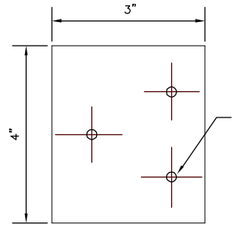

STIFFENER PLATE DETAIL

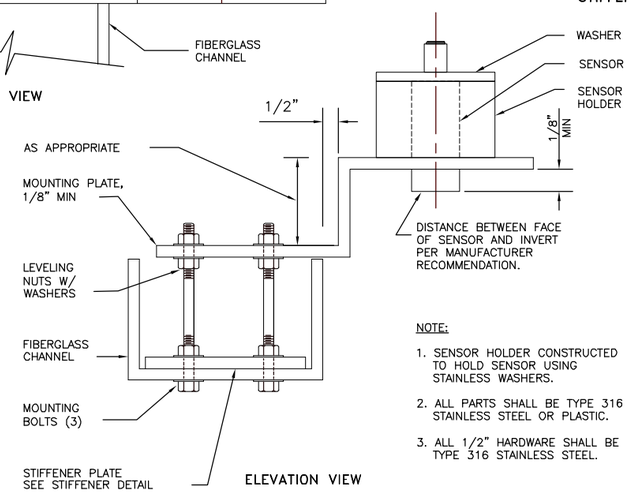

ELEVATION VIEW

NOTE:

1. SENSOR HOLDER CONSTRUCTED TO HOLD SENSOR USING STAINLESS WASHERS.
2. ALL PARTS SHALL BE TYPE 316 STAINLESS STEEL OR PLASTIC.
3. ALL 1/2" HARDWARE SHALL BE TYPE 316 STAINLESS STEEL.

DETAIL
2
NTS

FILE: 215786-11P101.dwg
DATE: Oct 06, 2015-4:15:41 pm, renider

HDR Engineering, Inc.

ISSUE	DATE	DESCRIPTION
A	JUNE 2015	ISSUED FOR BID

PROJECT MANAGER	C. OLSON
DESIGNED	R. NATOLI
DESIGNED	
CHECKED	C. OLSON
DRAWN	P. VAN MEURS
DATE	JUNE 30, 2015
PROJECT NUMBER	215786

REGISTERED PROFESSIONAL ENGINEER ROBERT G. NATOLI NO. 78271 EXP. 09/30/15 CIVIL STATE OF CALIFORNIA 06-30-15

CITY OF PINOLE CALIFORNIA 1903

PINOLE/HERCULES WATER POLLUTION CONTROL PLANT UPGRADE CLIENT PN

PROCESS INFLUENT SEWER FLUMES FLOW MEASUREMENT SECTIONS & DETAILS

0 1" 2"

FILENAME	215786-11P101
SCALE	AS NOTED

SHEET 11P101

NOTE:

1. PVC LINER REQUIRED FOR THIS STRUCTURES. SEE NOTE 10 ON SHEET 12S101.

8-D
FOR CONTINUATION SEE SHEET 03C106

FOR CONTINUATION SEE SHEET 13P101

E 12P106

D 12P105

C 12P105

A 12P103

FOR CONTINUATION SEE SHEET 03C106

6-D

24-PD

6-D

4-D

12-FA

FOR CONTINUATION SEE SHEET 13P101

2-3W

8-FA

1 1/2-3W IN VERTICAL TO UPPER PLAN

8-FA

UP TO HOSE VALVE

1-3W UP TO HOSE VALVE

5'-4 7/16"*

2-FA DRAIN

BALL VALVE WITH VALVE BOX

SEE 12 SERIES STRUCTURAL SHEETS

12PMP304
INFLUENT PUMP 4

12SLG204
36" x 60" SST SLIDE GATE

12SLG202
36 x 60 SLIDE GATE

12PPS201
PERFORATED PLATED SCREEN 2

6" MIN

1'-9 1/4"*

4'-2 1/2"*

12PMP303
INFLUENT PUMP 3

INFLUENT PUMPING WETWELL 2

SCREEN CHAMBER 2

12SLG102
36" x 60" SST SLIDE GATE

1 00P006 WITH 1 ROW OF ORIFICES FACING DOWNSTREAM

36-RS

B 12P104

INLET CHAMBER 2

INLET CHAMBER 1

FOR CONTINUATION SEE SHEET 03C106

INFLUENT PUMPING WETWELL 1

SCREEN CHAMBER 1

SEE SHEET 13P101 FOR GRIT AREA

12PMP302
INFLUENT PUMP 2

12SLG101
36" x 60" SST SLIDE GATE

1-FCL

12PMP301
INFLUENT PUMP 1

12SLG203
36" x 60" SST SLIDE GATE

12SLG201
36" x 60" SST SLIDE GATE

12PPS101
PERFORATED PLATED SCREEN 1

18-RS

PUMP GUIDE RAIL SYSTEM

2-FA
DRAIN

8-FA

6-FA

BALL VALVE WITH VALVE BOX

8-FA

8-FA

ROCK SUMP (2' LONG x 1' DEEP), TYP

* COORDINATE DIMENSIONS WITH PUMP MANUFACTURER

14-FA

12-FA

12-FA

18-FA

FOR CONTINUATION SEE SHT 13P101

LOWER PLAN

3/8" = 1'-0"

FILE: 215786-12P101.dwg
DATE: Oct 06, 2015-4:15:49pm, rsnider

HDR Engineering, Inc.

ISSUE	DATE	DESCRIPTION
A	JUNE 2015	ISSUED FOR BID

PROJECT MANAGER	C. OLSON
DESIGNED	R. NATOLI
DESIGNED	
CHECKED	C. OLSON
DRAWN	B. DOWN
DATE	JUNE 30, 2015
PROJECT NUMBER	215786

REGISTERED PROFESSIONAL ENGINEER ROBERT G. NATOLI NO. 78271 EXP. 09/30/15 CIVIL STATE OF CALIFORNIA

CITY OF PINOLE CALIFORNIA 1903

PINOLE/HERCULES WATER POLLUTION CONTROL PLANT UPGRADE CLIENT PN

PROCESS

HEADWORKS LOWER PLAN

0 1" 2"

FILENAME	215786-12P101
SCALE	AS NOTED

SHEET 12P101

NOTE:

1. SEE SHEET 02C102 FOR PAVING AND GRADING AROUND HEADWORKS STRUCTURES.

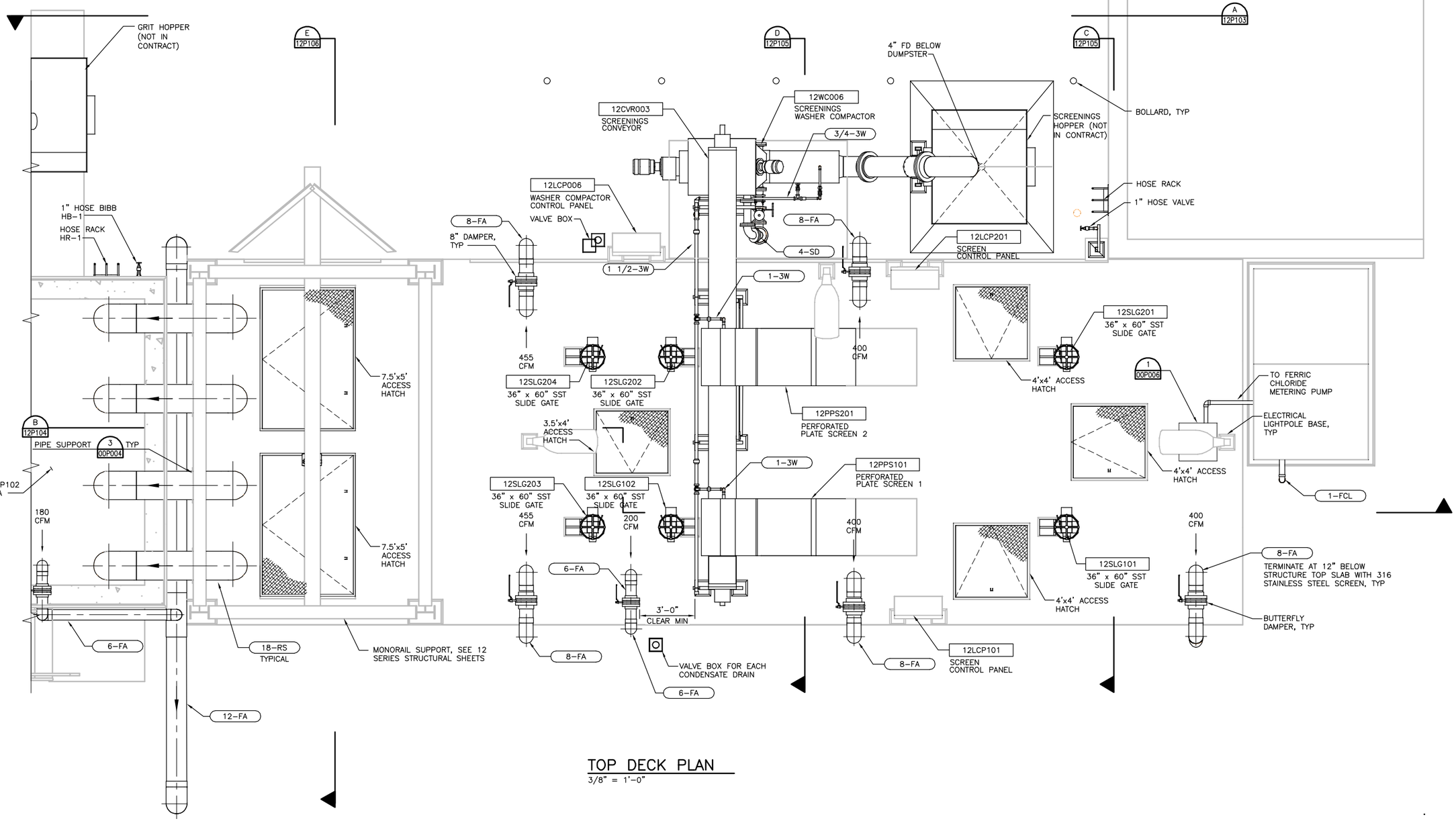

TOP DECK PLAN

3/8" = 1'-0"

FILE: 215786-12P102.dwg
DATE: Oct 06, 2015-4:15:57pm, rsnider

HDR Engineering, Inc.

ISSUE	DATE	DESCRIPTION
A	JUNE 2015	ISSUED FOR BID

PROJECT MANAGER	C. OLSON
DESIGNED	R. NATOLI
DESIGNED	
CHECKED	C. OLSON
DRAWN	B. DOWN
DATE	JUNE 30, 2015
PROJECT NUMBER	215786

REGISTERED PROFESSIONAL ENGINEER ROBERT G. NATOLI NO. 78271 EXP. 09/30/15 CIVIL STATE OF CALIFORNIA 06-30-15

CITY OF PINOLE CALIFORNIA 1903

PINOLE/HERCULES WATER POLLUTION CONTROL PLANT UPGRADE CLIENT PN

PROCESS

HEADWORKS TOP DECK PLAN

0 1" 2"

FILENAME	215786-12P102
SCALE	AS NOTED

SHEET 12P102

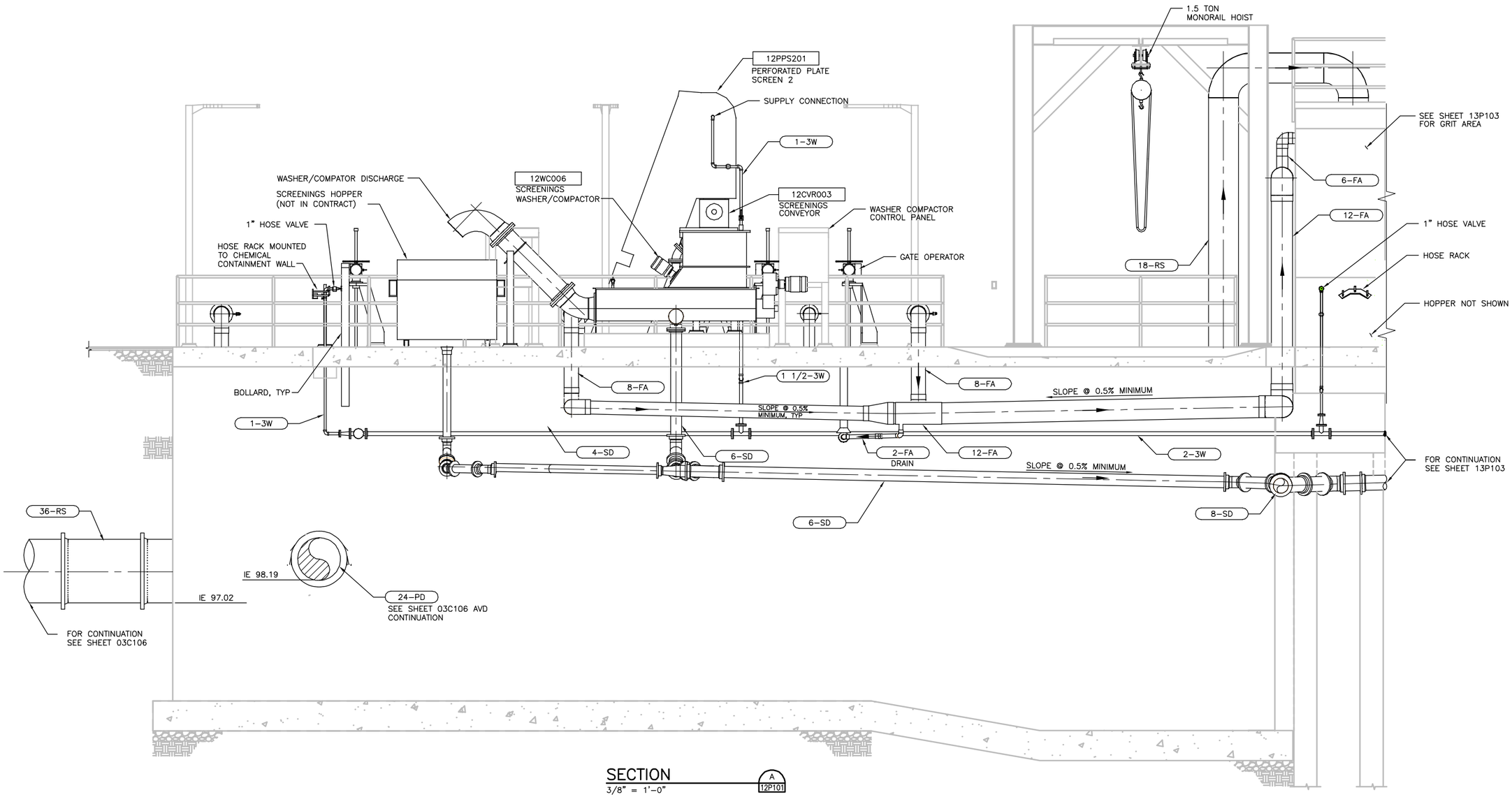

SECTION (A / 12P101)
3/8" = 1'-0"

FILE: 215786–12P103.dwg
DATE: Oct 06, 2015–4:16:19pm, ranider

HDR Engineering, Inc.

ISSUE	DATE	DESCRIPTION
A	JUNE 2015	ISSUED FOR BID

PROJECT MANAGER	C. OLSON
DESIGNED	R. NATOLI
DESIGNED	
CHECKED	C. OLSON
DRAWN	B. DOWN
DATE	JUNE 30, 2015
PROJECT NUMBER	215786

REGISTERED PROFESSIONAL ENGINEER
ROBERT G. NATOLI
NO. 78271
EXP. 09/30/15
CIVIL
STATE OF CALIFORNIA
06-30-15

CITY OF PINOLE CALIFORNIA 1903

PINOLE/HERCULES
WATER POLLUTION
CONTROL PLANT UPGRADE
CLIENT PN

PROCESS

HEADWORKS
SECTION 1

0 1" 2"

FILENAME	215786–12P103
SCALE	AS NOTED

SHEET
12P103

NOTES:

1. COORDINATE PUMP EQUIPMENT PAD HEIGHT WITH PUMP MANUFACTURER.
2. 18–INCH RS BETWEEN INFLUENT PUMPS AND GRIT REMOVAL SHALL BE STEEL. DIP IS NOT AN OPTION FOR THESE FOUR PIPES.

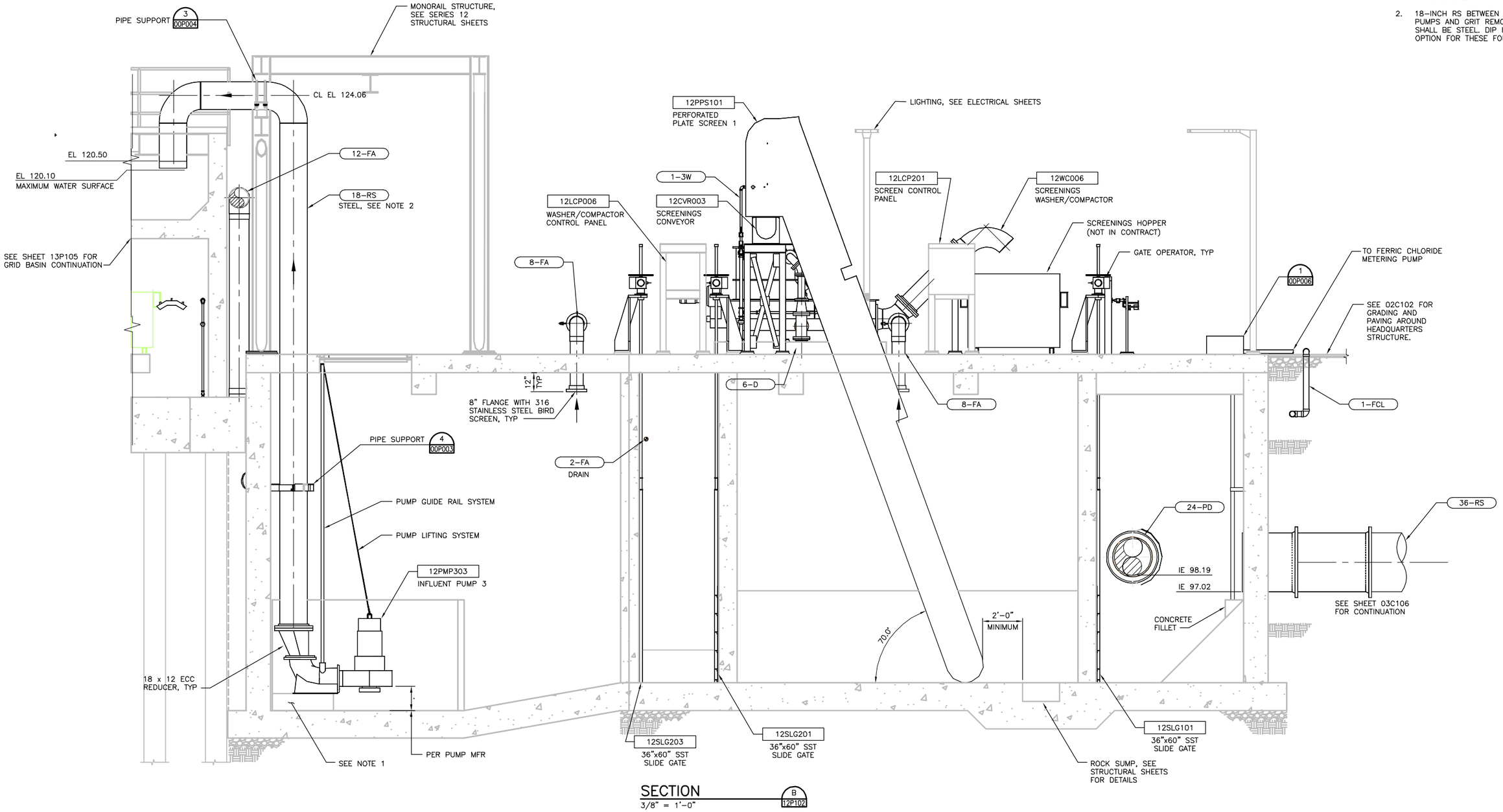

SECTION
3/8" = 1'–0"
B 12P102

FILE: 215786–12P104.dwg
DATE: Oct 06, 2015–4:16:42pm, rsnider

HDR Engineering, Inc.

ISSUE	DATE	DESCRIPTION
A	JUNE 2015	ISSUED FOR BID

PROJECT MANAGER	C. OLSON
DESIGNED	R. NATOLI
DESIGNED	
CHECKED	C. OLSON
DRAWN	B. DOWN
DATE	JUNE 30, 2015
PROJECT NUMBER	215786

REGISTERED PROFESSIONAL ENGINEER ROBERT G. NATOLI NO. 78271 EXP. 09/30/15 CIVIL STATE OF CALIFORNIA
06-30-15

CITY OF PINOLE CALIFORNIA 1903

PINOLE/HERCULES WATER POLLUTION CONTROL PLANT UPGRADE CLIENT PN

PROCESS

HEADWORKS SECTION 2

0 1" 2"

FILENAME	215786–12P104
SCALE	AS NOTED

SHEET **12P104**

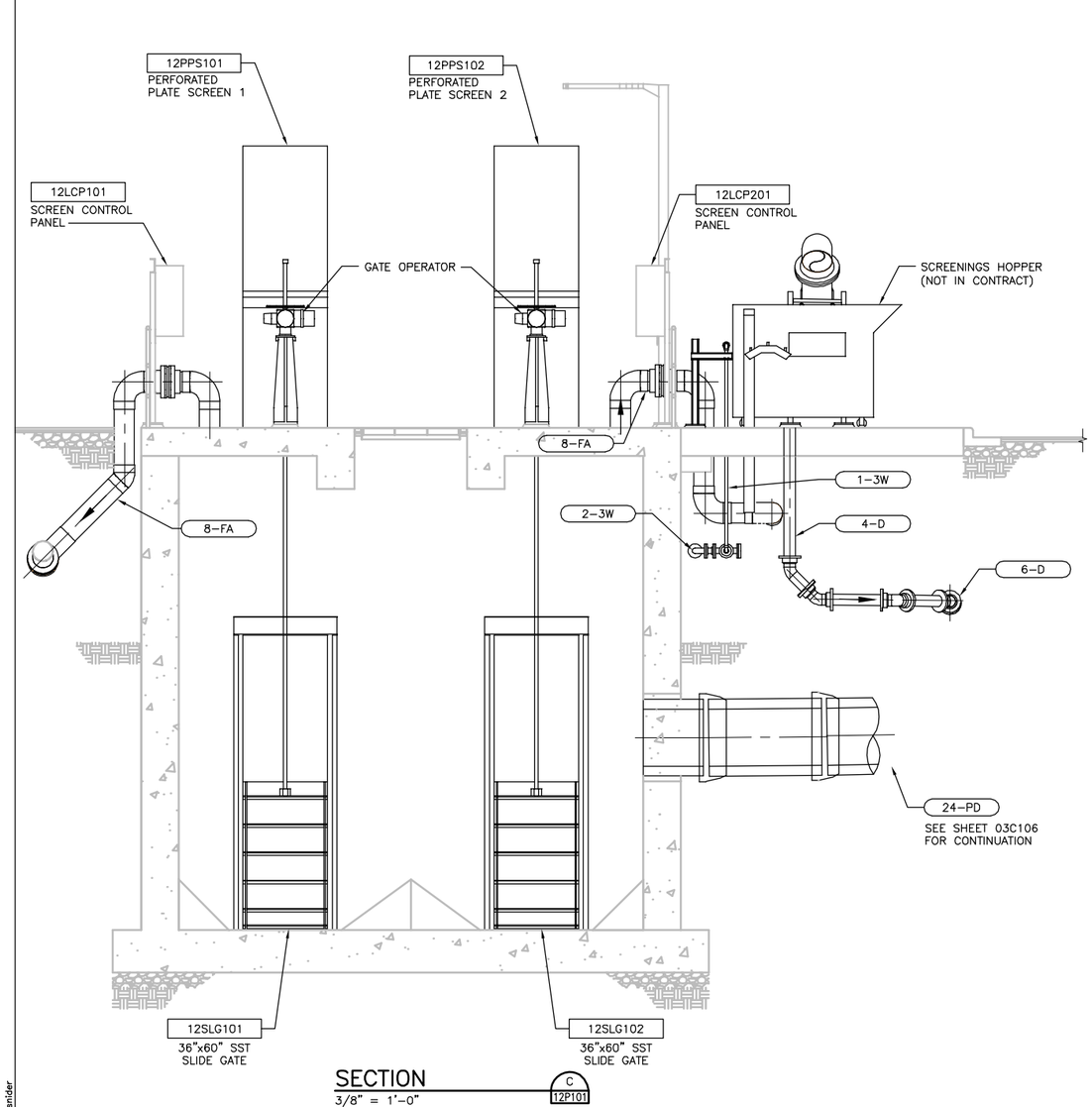

SECTION
3/8" = 1'-0"
C
12P101

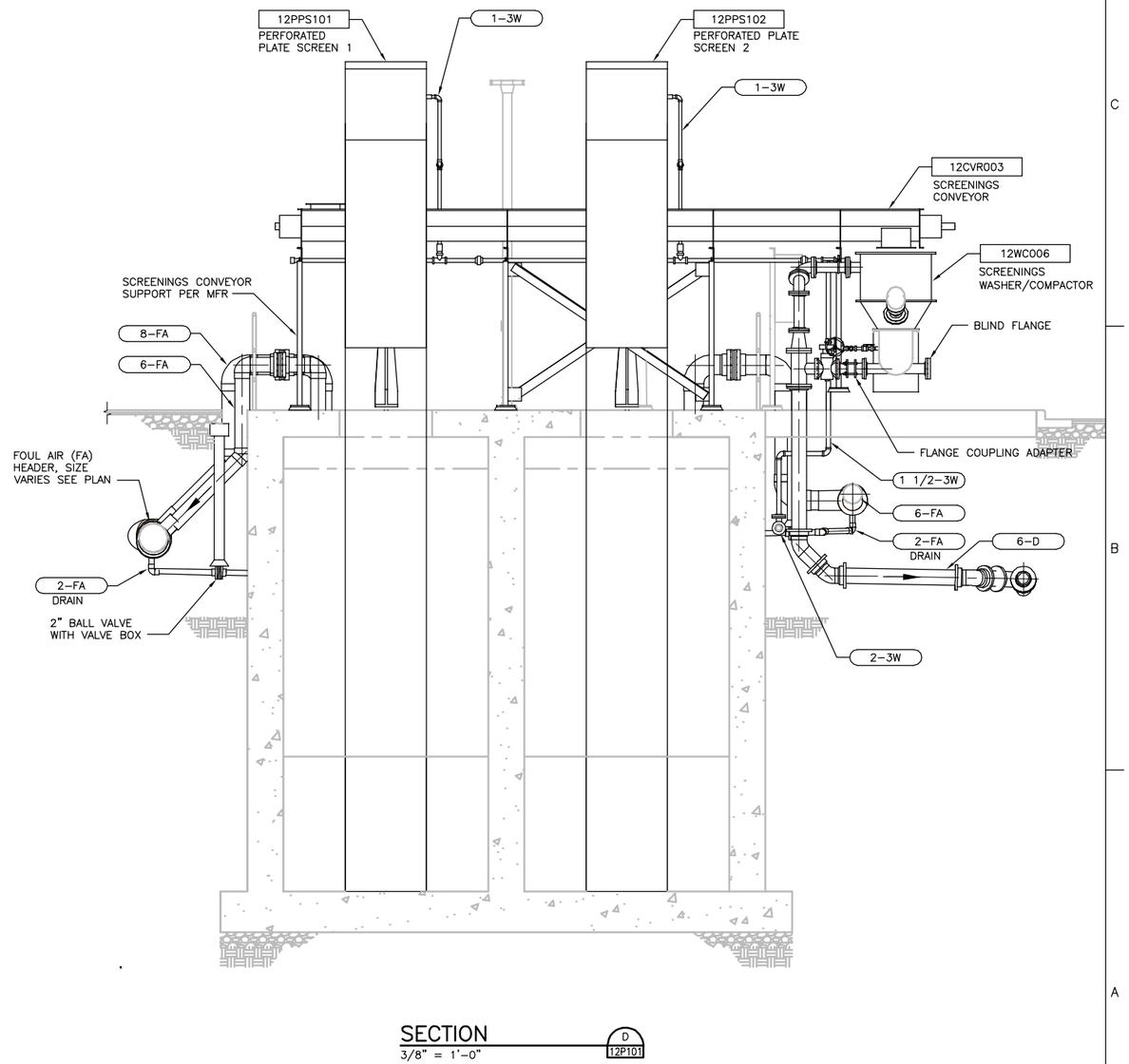

SECTION
3/8" = 1'-0"
D
12P101

FILE: 215786-12P105.dwg
DATE: Oct 06, 2015-4:17:04pm, ranider

HDR
HDR Engineering, Inc.

ISSUE	DATE	DESCRIPTION
A	JUNE 2015	ISSUED FOR BID

PROJECT MANAGER	C. OLSON
DESIGNED	R. NATOLI
DESIGNED	
CHECKED	C. OLSON
DRAWN	B. DOWN
DATE	JUNE 30, 2015
PROJECT NUMBER	215786

REGISTERED PROFESSIONAL ENGINEER
ROBERT G. NATOLI
NO. 78271
EXP. 09/30/15
CIVIL
STATE OF CALIFORNIA
06-30-15

CITY OF PINOLE CALIFORNIA 1903

PINOLE/HERCULES
WATER POLLUTION
CONTROL PLANT UPGRADE
CLIENT PN

PROCESS

HEADWORKS SECTIONS 3

0 1" 2"

FILENAME	215786-12P105
SCALE	AS NOTED

SHEET
12P105

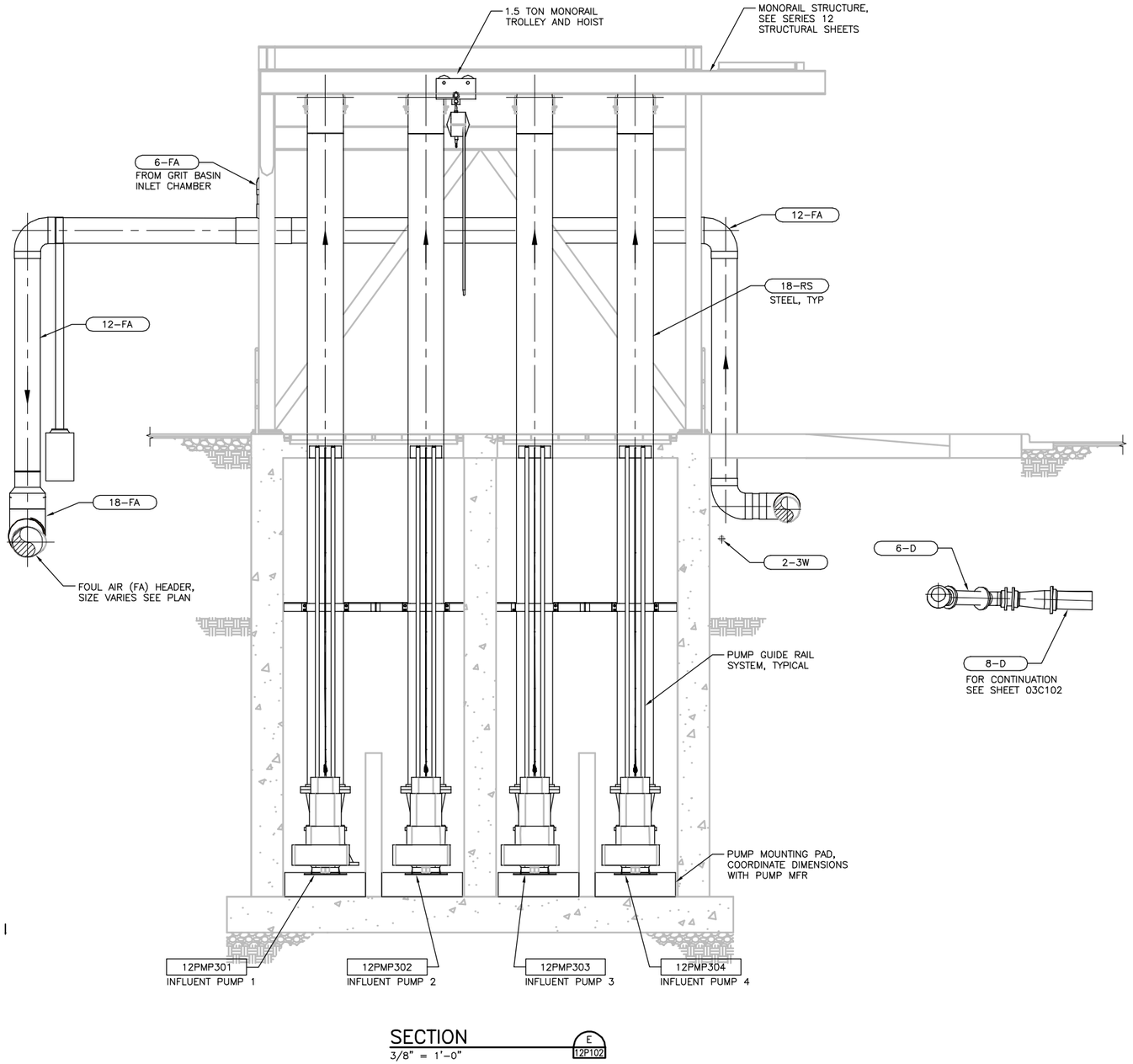

SECTION
3/8" = 1'-0"
E / 12P102

FOR CONTINUATION SEE SHEET 03C102

FILE: 215786-12P106.dwg
DATE: Oct 06, 2015--4:17:26pm, rsnider

HDR Engineering, Inc.

ISSUE	DATE	DESCRIPTION
A	JUNE 2015	ISSUED FOR BID

PROJECT MANAGER	C. OLSON
DESIGNED	R. NATOLI
DESIGNED	
CHECKED	C. OLSON
DRAWN	B. DOWN
DATE	JUNE 30, 2015
PROJECT NUMBER	215786

REGISTERED PROFESSIONAL ENGINEER
ROBERT G. NATOLI
NO. 78271
EXP. 09/30/15
CIVIL
STATE OF CALIFORNIA
06-30-15

CITY OF PINOLE CALIFORNIA 1903

PINOLE/HERCULES
WATER POLLUTION
CONTROL PLANT UPGRADE
CLIENT PN

PROCESS

HEADWORKS SECTION 4

0 1" 2"

FILENAME	215786-12P106
SCALE	AS NOTED

SHEET
12P106

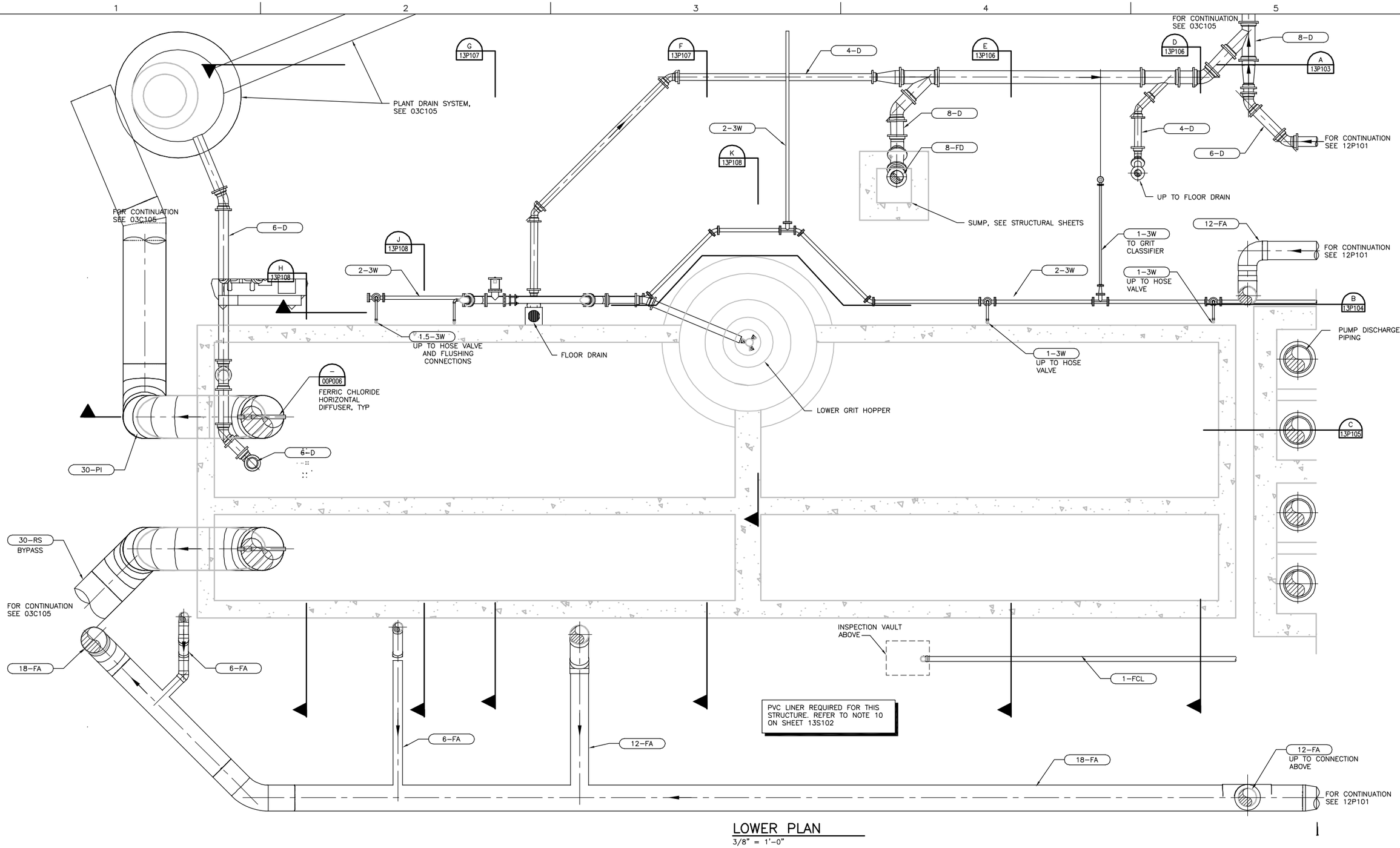

LOWER PLAN

3/8" = 1'-0"

FILE: 215786-13P101.dwg
DATE: Oct 06, 2015-4:17:39pm, ranider

HDR Engineering, Inc.

ISSUE	DATE	DESCRIPTION
A	JUNE 2015	ISSUED FOR BID

PROJECT MANAGER	C. OLSON
DESIGNED	R. NATOLI
DESIGNED	M. RAMANATHAN
CHECKED	C. OLSON
DRAWN	B. DOWN
DATE	JUNE 30, 2015
PROJECT NUMBER	215786

REGISTERED PROFESSIONAL ENGINEER
ROBERT G. NATOLI
NO. 78271
EXP. 09/30/15
CIVIL
STATE OF CALIFORNIA
06-30-15

CITY OF PINOLE CALIFORNIA 1903

PINOLE/HERCULES
WATER POLLUTION
CONTROL PLANT UPGRADE
CLIENT PN

PROCESS

GRIT BASIN LOWER PLAN

0 1" 2"

FILENAME	215786-13P101
SCALE	AS NOTED

SHEET
13P101

NOTE:

1. SEE SERIES 13 STRUCTURAL SHEETS FOR CELLULAR CONCRETE FILL IN CHANNELS.
2. COORDINATE 3W CONNECTIONS WITH EQUIPMENT MFR AND INSTRUMENTATION DRAWINGS.

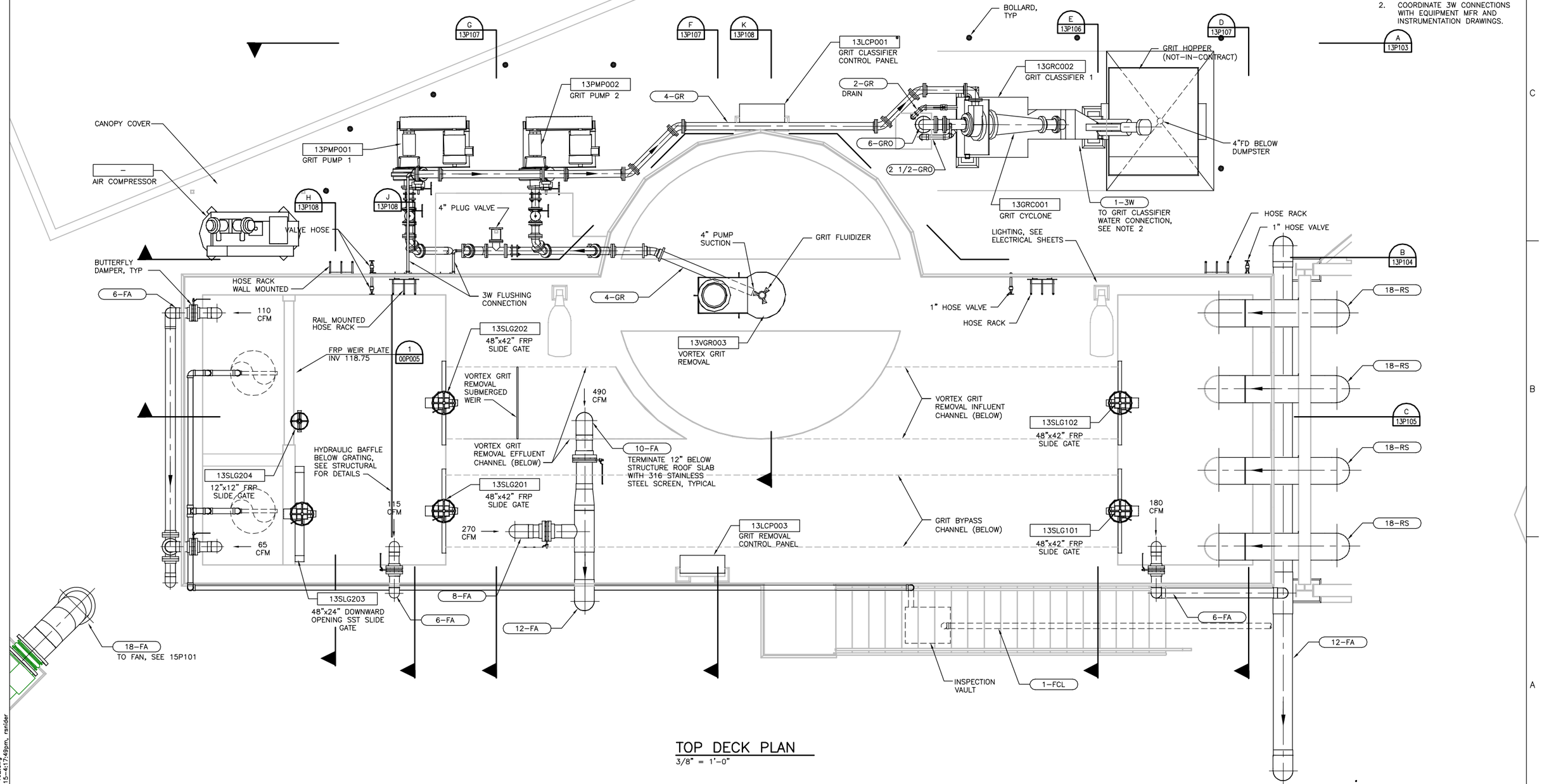

TOP DECK PLAN

3/8" = 1'-0"

FILE: 215786-13P102.dwg
DATE: Oct 06, 2015-4:17:49pm, rsnider

HDR Engineering, Inc.

ISSUE	DATE	DESCRIPTION
A	JUNE 2015	ISSUED FOR BID

PROJECT MANAGER	C. OLSON
DESIGNED	R. NATOLI
DESIGNED	M. RAMANATHAN
CHECKED	C. OLSON
DRAWN	B. DOWN
DATE	JUNE 30, 2015
PROJECT NUMBER	215786

REGISTERED PROFESSIONAL ENGINEER ROBERT G. NATOLI NO. 78271 EXP. 09/30/15 CIVIL STATE OF CALIFORNIA 06-30-15

PINOLE/HERCULES WATER POLLUTION CONTROL PLANT UPGRADE CLIENT PN

PROCESS

GRIT BASIN TOP DECK PLAN

0 1" 2"

FILENAME	215786-13P102
SCALE	AS NOTED

SHEET 13P102

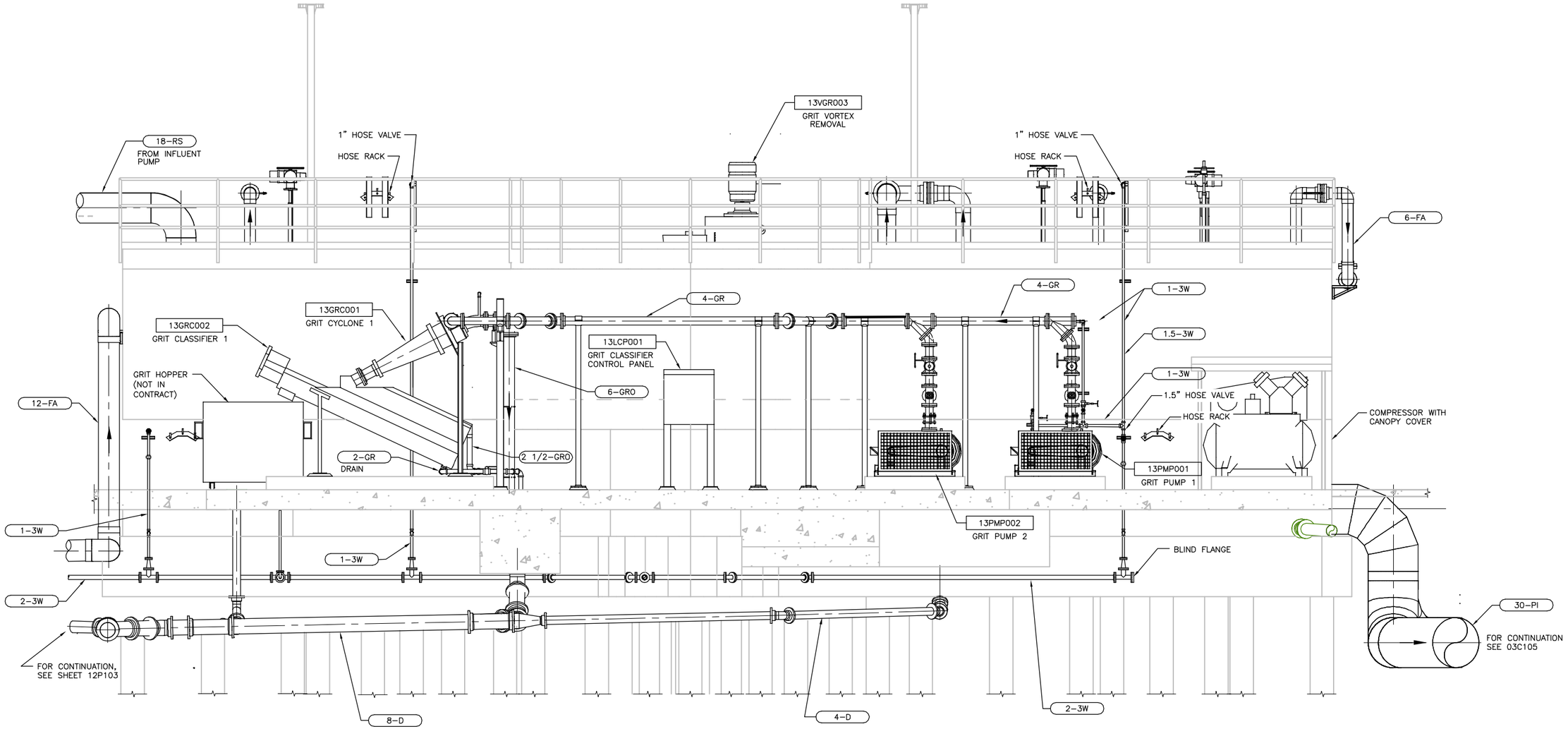

SECTION
3/8" = 1'-0"
A 13P101

FILE: 215786-13P103.dwg
DATE: Oct 06, 2015-4:18:00pm, ranider

HDR Engineering, Inc.

ISSUE	DATE	DESCRIPTION
A	JUNE 2015	ISSUED FOR BID

PROJECT MANAGER	C. OLSON
DESIGNED	R. NATOLI
DESIGNED	M. RAMANATHAN
CHECKED	C. OLSON
DRAWN	B. DOWN
DATE	JUNE 30, 2015
PROJECT NUMBER	215786

REGISTERED PROFESSIONAL ENGINEER
ROBERT G. NATOLI
NO. 78271
EXP. 09/30/15
CIVIL
STATE OF CALIFORNIA
06-30-15

CITY OF PINOLE CALIFORNIA 1903

PINOLE/HERCULES
WATER POLLUTION
CONTROL PLANT UPGRADE
CLIENT PN

PROCESS

GRIT BASIN SECTION 1

0 1" 2"

FILENAME	215786-13P103
SCALE	AS NOTED

SHEET
13P103

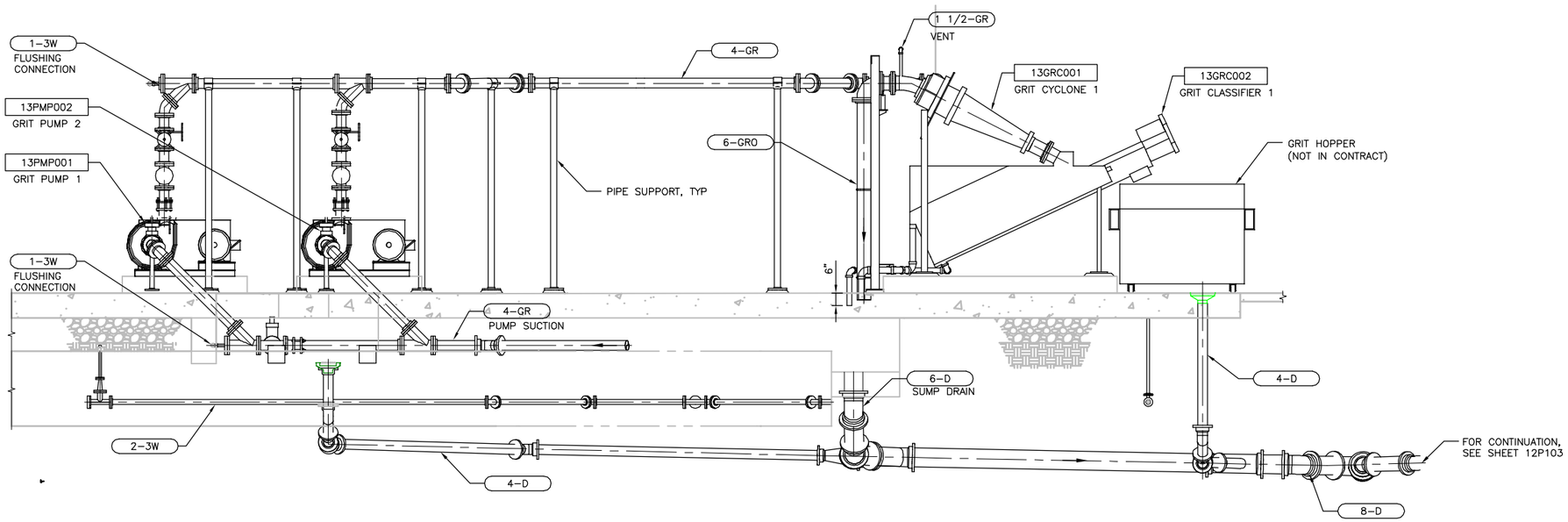

SECTION
3/8" = 1'-0"
B
13P101

FILE: 215786-13P104.dwg
DATE: Oct 06, 2015-4:18:12pm, ranider

HDR Engineering, Inc.

ISSUE	DATE	DESCRIPTION
A	JUNE 2015	ISSUED FOR BID

PROJECT MANAGER	C. OLSON
DESIGNED	R. NATOLI
DESIGNED	M. RAMANATHAN
CHECKED	C. OLSON
DRAWN	B. DOWN
DATE	JUNE 30, 2015
PROJECT NUMBER	215786

REGISTERED PROFESSIONAL ENGINEER
ROBERT G. NATOLI
NO. 78271
EXP. 09/30/15
CIVIL
STATE OF CALIFORNIA
06-30-15

CITY OF PINOLE CALIFORNIA 1903

PINOLE/HERCULES
WATER POLLUTION
CONTROL PLANT UPGRADE
CLIENT PN

PROCESS

GRIT BASIN
SECTION 2

0 1" 2"

FILENAME	215786-13P104
SCALE	AS NOTED

SHEET
13P104

NOTE:

1. INSTALL VORTEX GRIT SUBMERGED WEIR PER MANUFACTURER RECOMMENDATIONS.
2. SEE SPECIFICATION SECTION 11153 FOR FRP HYDRAULIC BAFFLE.

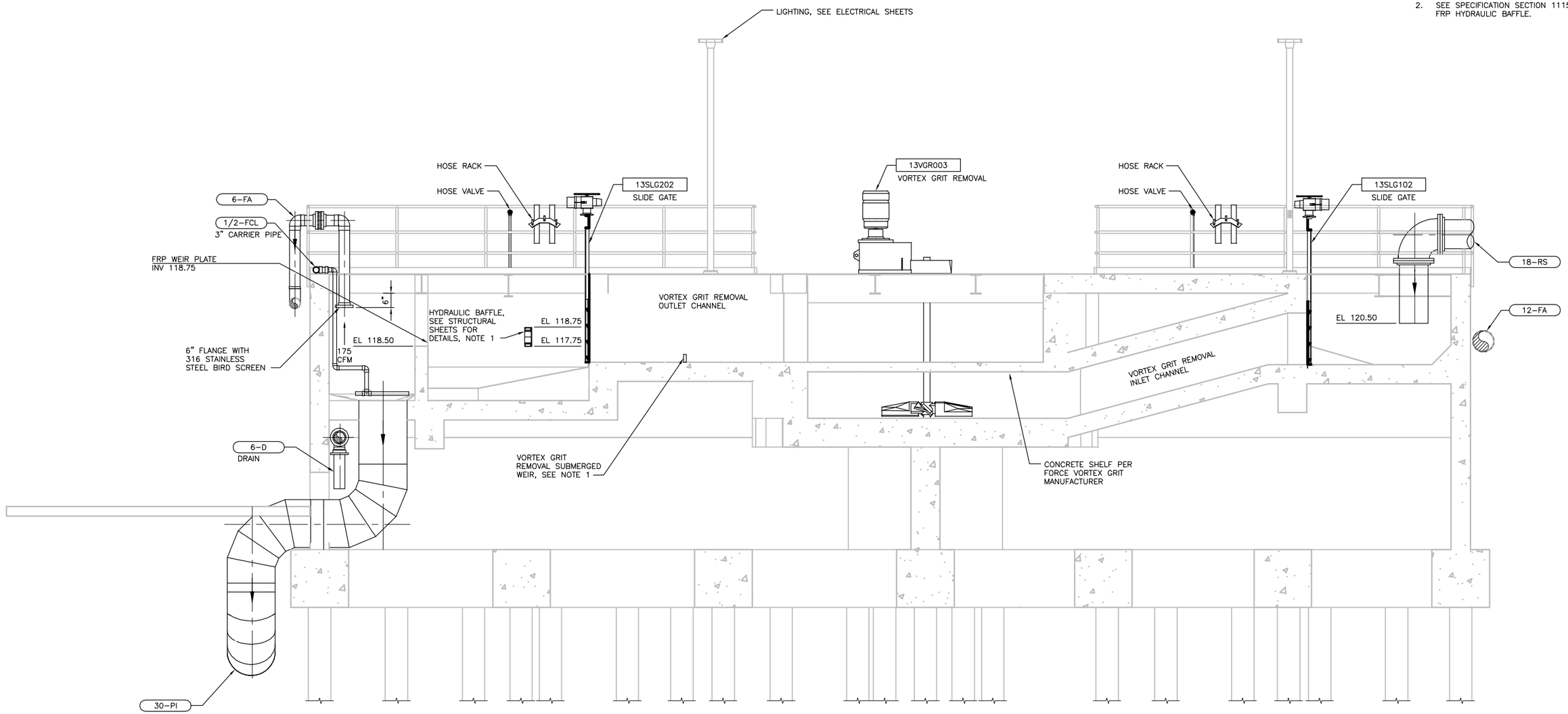

SECTION (C / 13P101)
3/8" = 1'–0"

FILE: 215786–13P105.dwg
DATE: Oct 06, 2015–4:18:24pm, rander

HDR Engineering, Inc.

ISSUE	DATE	DESCRIPTION
A	JUNE 2015	ISSUED FOR BID

PROJECT MANAGER	C. OLSON
DESIGNED	M. RAMANATHAN
DESIGNED	
CHECKED	C. OLSON
DRAWN	B. DOWN
DATE	JUNE 30, 2015
PROJECT NUMBER	215786

REGISTERED PROFESSIONAL ENGINEER
ROBERT G. MAYOL
NO. 78271
EXP. 09/30/15
CIVIL
STATE OF CALIFORNIA
06-30-15

CITY OF PINOLE CALIFORNIA 1903

PINOLE/HERCULES
WATER POLLUTION
CONTROL PLANT UPGRADE
CLIENT PN

PROCESS

GRIT BASIN
SECTION 3

0 1" 2"

FILENAME	215786–13P105
SCALE	AS NOTED

SHEET
13P105

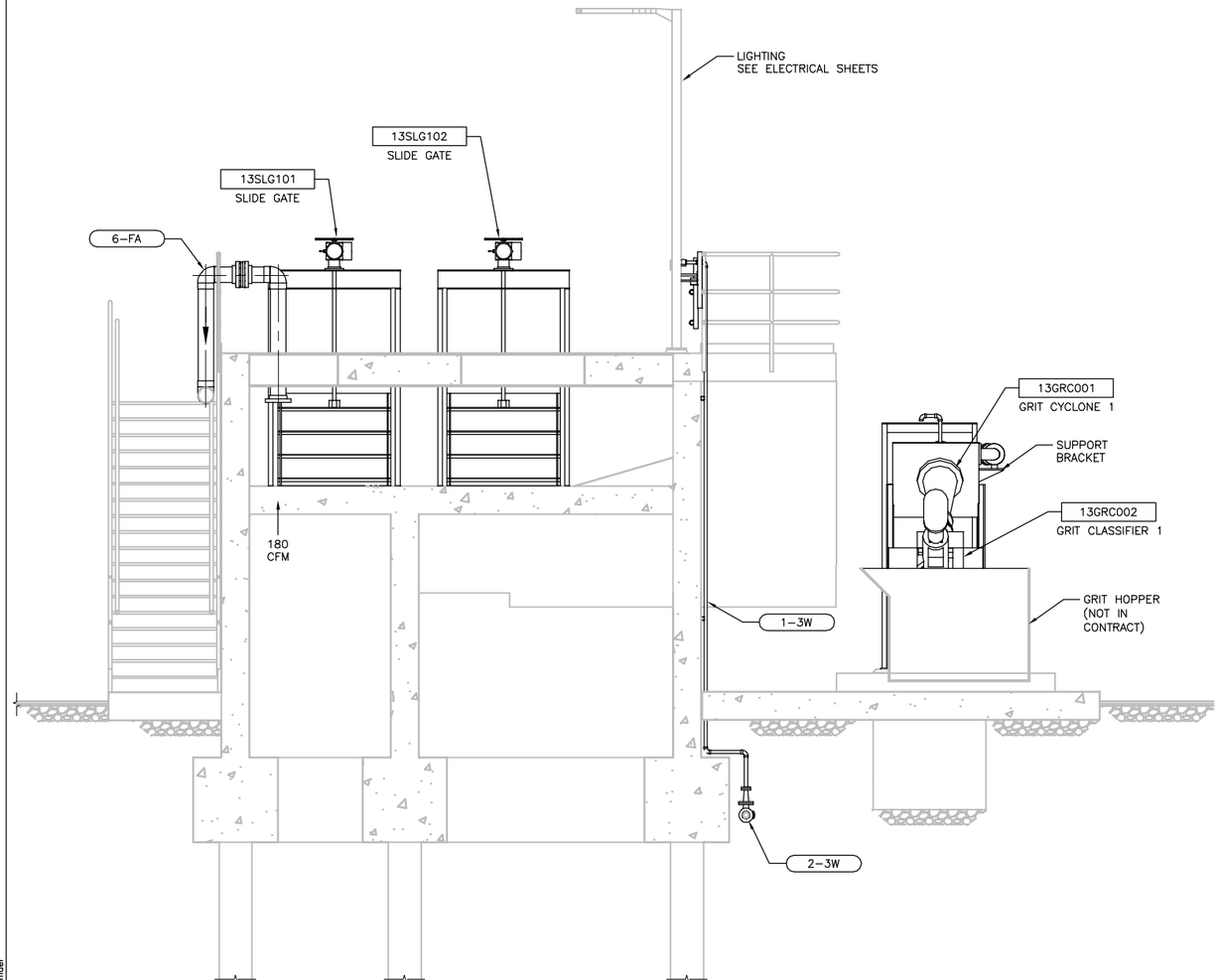

SECTION
3/8" = 1'-0"
D
13P101

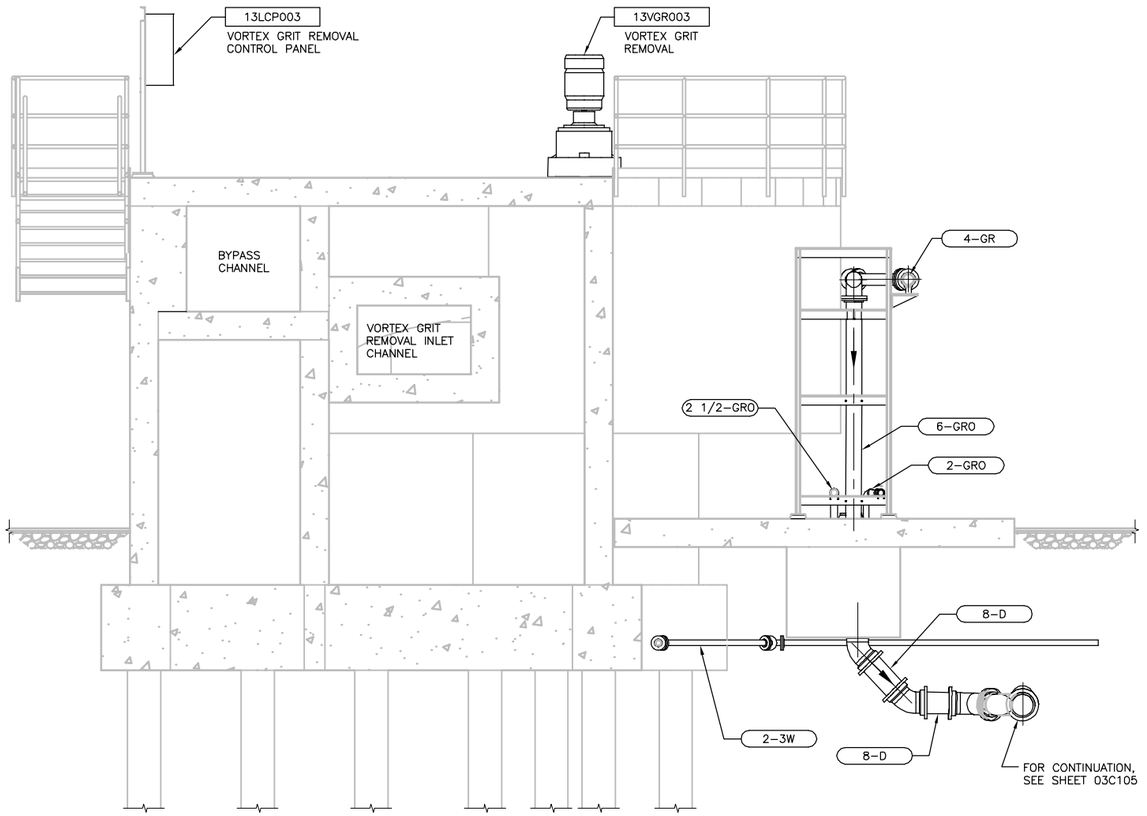

SECTION
3/8" = 1'-0"
E
13P101

FILE: 215786-13P106.dwg
DATE: Oct 06, 2015-4:18:36pm, ranider

HDR Engineering, Inc.

ISSUE	DATE	DESCRIPTION
A	JUNE 2015	ISSUED FOR BID

PROJECT MANAGER	C. OLSON
DESIGNED	R. NATOLI
DESIGNED	M. RAMANATHAN
CHECKED	C. OLSON
DRAWN	B. DOWN
DATE	JUNE 30, 2015
PROJECT NUMBER	215786

REGISTERED PROFESSIONAL ENGINEER
ROBERT G. NATOLI
NO. 78271
EXP. 09/30/15
CIVIL
STATE OF CALIFORNIA
06-30-15

CITY OF PINOLE CALIFORNIA 1903

PINOLE/HERCULES
WATER POLLUTION
CONTROL PLANT UPGRADE
CLIENT PN

PROCESS

GRIT BASIN
SECTIONS 4

0 1" 2"

FILENAME	215786-13P106
SCALE	AS NOTED

SHEET
13P106

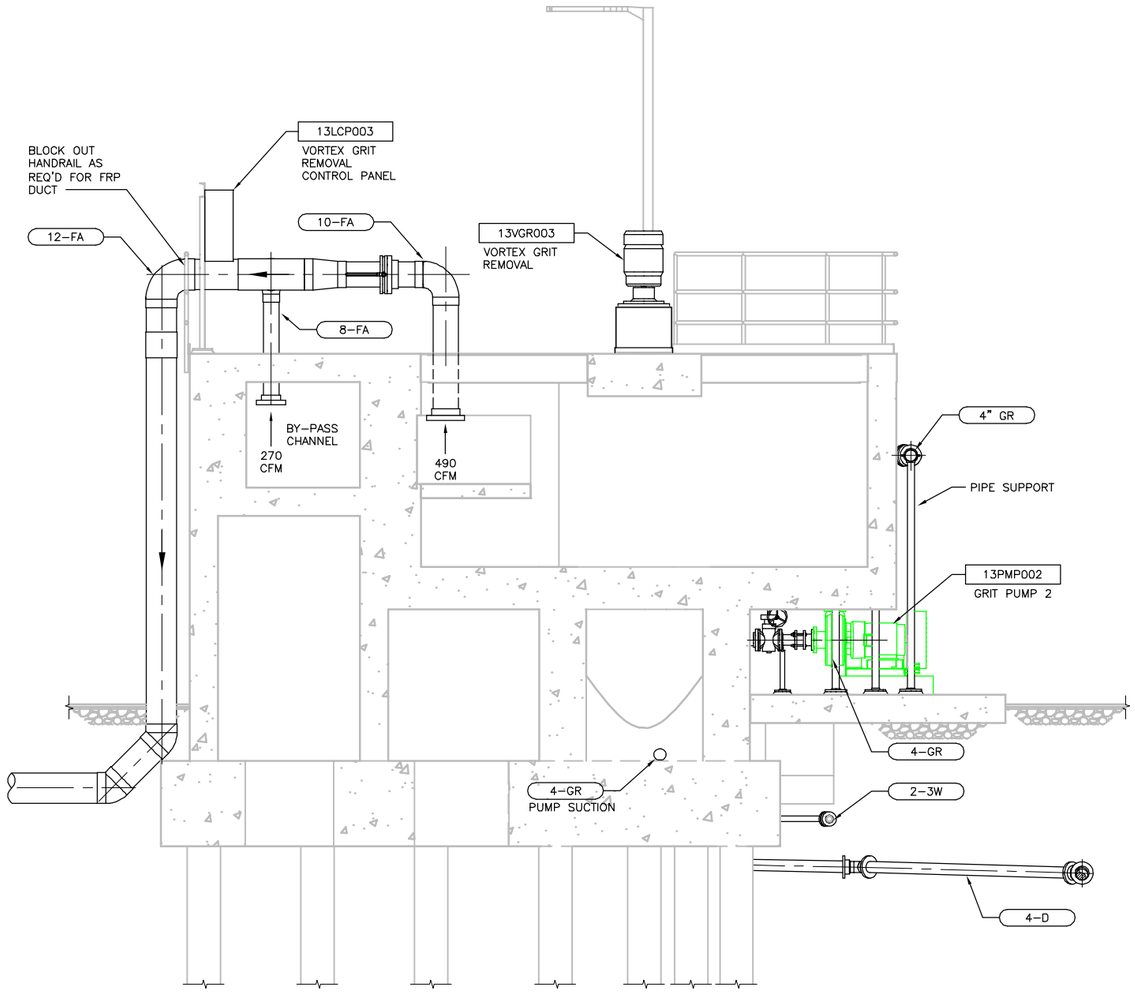

SECTION
3/8" = 1'–0"
F 13P101

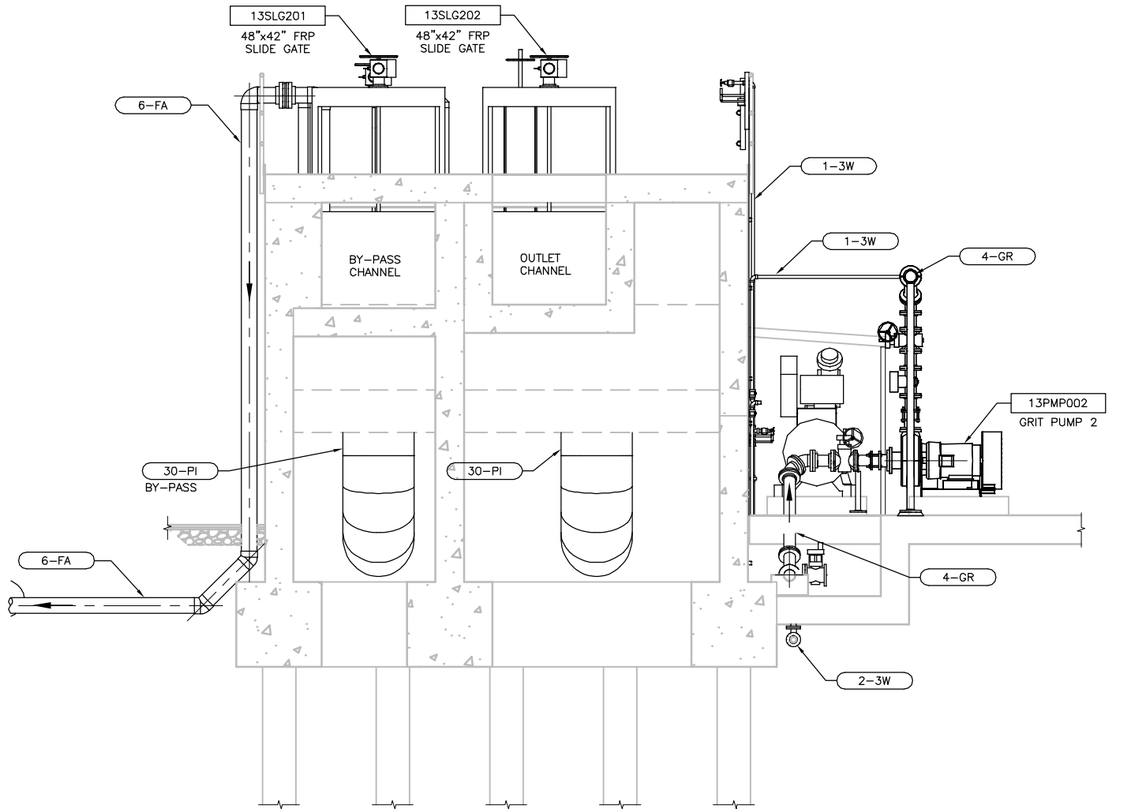

SECTION
3/8" = 1'–0"
G 13P101

FILE: 215786-13P107.dwg
DATE: Oct 06, 2015-4:18:49pm, ranider

HDR Engineering, Inc.

ISSUE	DATE	DESCRIPTION
A	JUNE 2015	ISSUED FOR BID

PROJECT MANAGER	C. OLSON
DESIGNED	R. NATOLI
DESIGNED	
CHECKED	C. OLSON
DRAWN	B. DOWN
DATE	JUNE 30, 2015
PROJECT NUMBER	215786

REGISTERED PROFESSIONAL ENGINEER
ROBERT G. NATOLI
NO. 78271
EXP. 09/30/15
CIVIL
STATE OF CALIFORNIA
06-30-15

CITY OF PINOLE CALIFORNIA 1903

PINOLE/HERCULES
WATER POLLUTION
CONTROL PLANT UPGRADE
CLIENT PN

PROCESS

GRIT BASIN SECTIONS 5

0 1" 2"

FILENAME	215786–13P107
SCALE	AS NOTED

SHEET
13P107

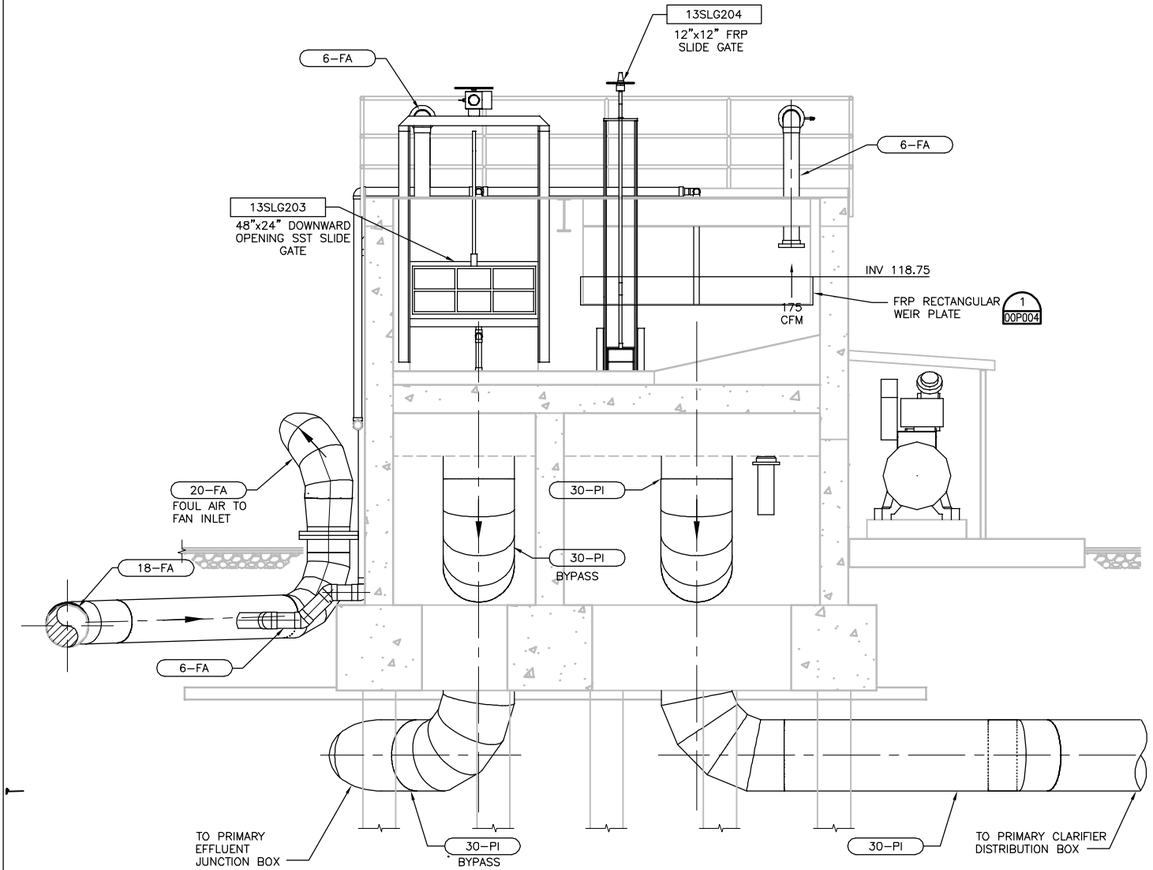

SECTION
3/8" = 1'-0"
H
13P101

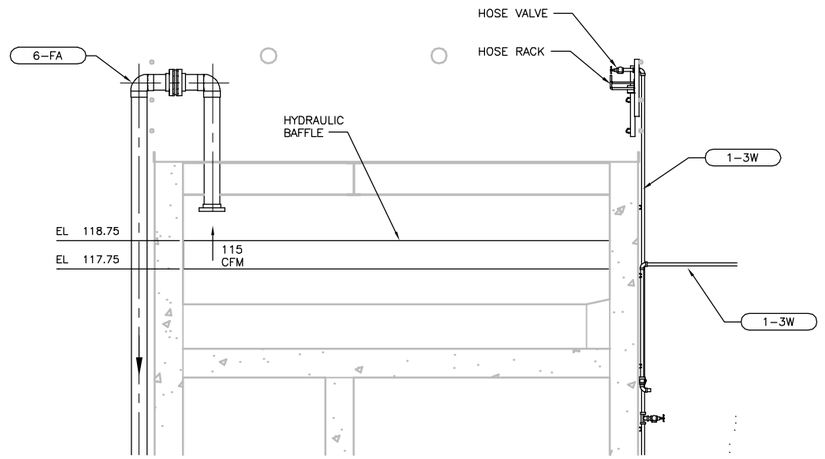

SECTION
3/8" = 1'-0"
J
13P101

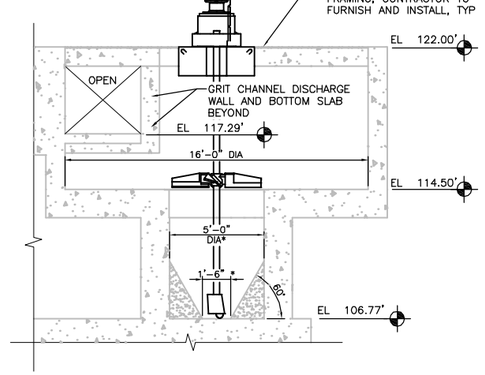

SECTION–TYPE "A"
1/4" = 1'-0"
K
13P102

NOTES:
1. DIMENSIONS PER
STRUCTURAL DRAWINGS.

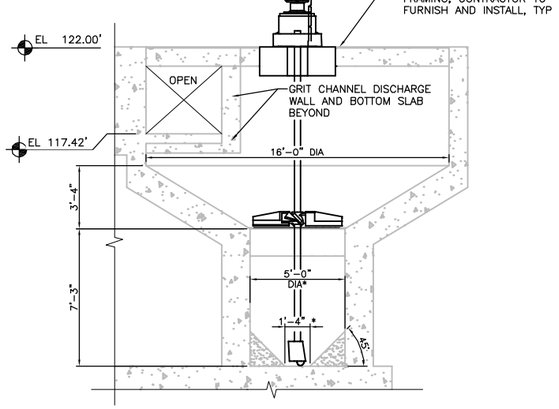

SECTION–TYPE "B"
1/4" = 1'-0"
K
13P102

NOTES:
1. STRUCTURAL AND GRIT PIPING CHANGES FOR
TYPE "B" GRIT REMOVAL RESPONSIBILITY OF THE
CONTRACTOR.

FILE: 215786-13P108.dwg
DATE: Oct 06, 2015-4:19:03pm, ranider

HDR Engineering, Inc.

ISSUE	DATE	DESCRIPTION
A	JUNE 2015	ISSUED FOR BID

PROJECT MANAGER	C. OLSON
DESIGNED	R. NATOLI
DESIGNED	
CHECKED	C. OLSON
DRAWN	B. DOWN
DATE	JUNE 30, 2015
PROJECT NUMBER	215786

REGISTERED PROFESSIONAL ENGINEER
ROBERT G. NATOLI
NO. 78271
EXP. 09/30/15
CIVIL
STATE OF CALIFORNIA
06-30-15

CITY OF PINOLE CALIFORNIA 1903

PINOLE/HERCULES
WATER POLLUTION
CONTROL PLANT UPGRADE
CLIENT PN

PROCESS

GRIT BASIN
SECTIONS AND DETAILS

0 1" 2"

FILENAME	215786-13P108
SCALE	AS NOTED

SHEET
13P108

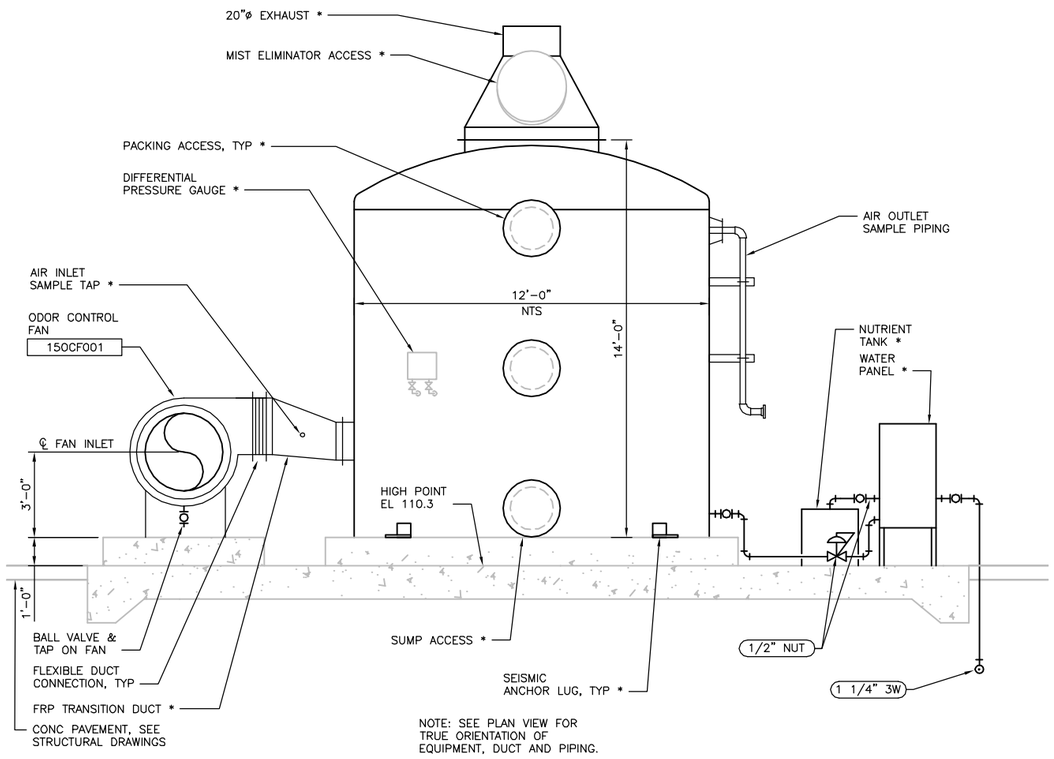

SECTION
3/8" = 1'-0"

A

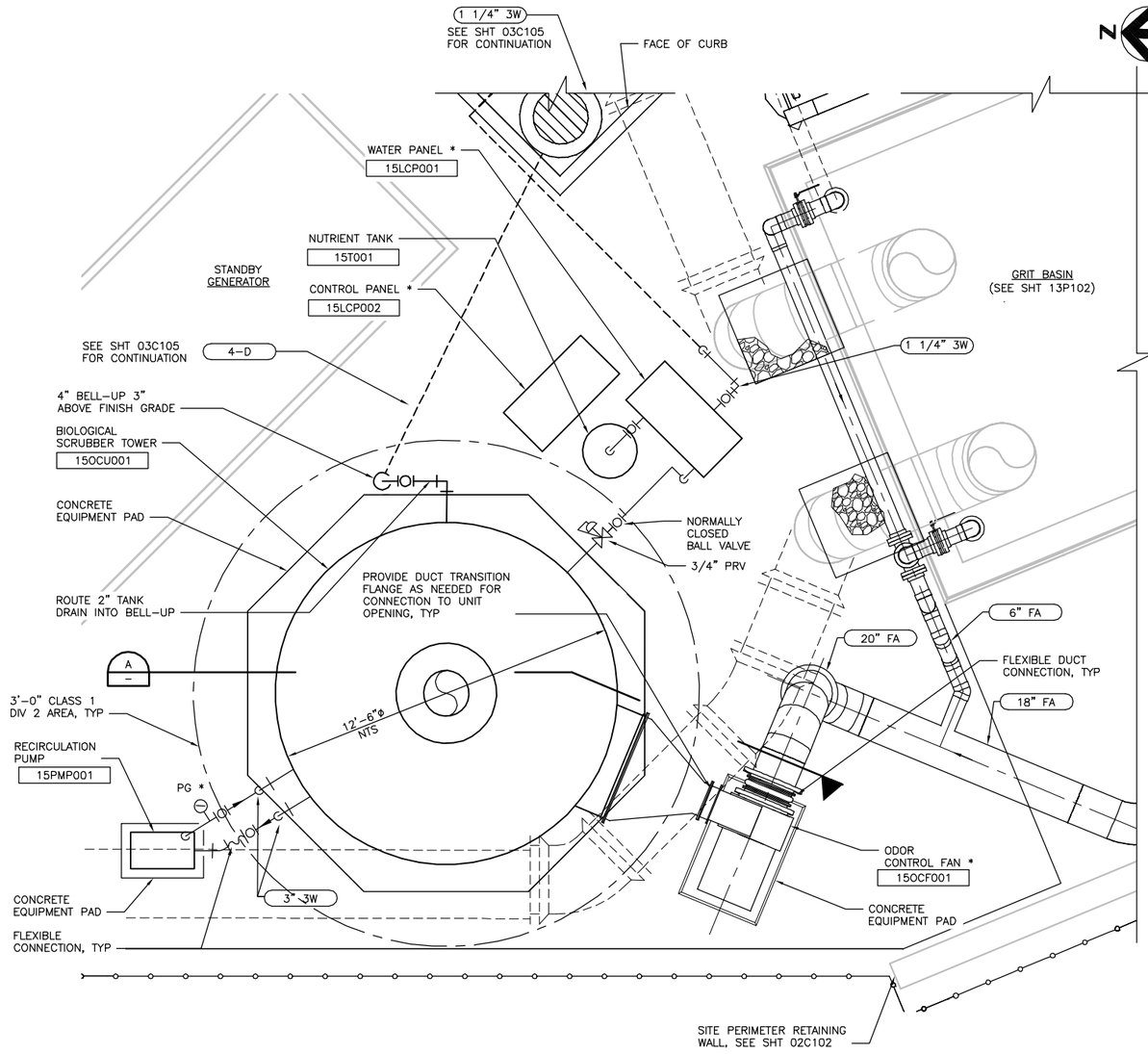

ODOR CONTROL AREA PLAN
3/8" = 1'-0"

FILE: 15P101.dwg
DATE: Oct 06, 2015-4:14:47pm, rsnider

HDR Engineering, Inc.

ISSUE	DATE	DESCRIPTION
A	JUNE 2015	ISSUED FOR BID

PROJECT MANAGER	C. OLSON
DESIGNED	T. KONTONICKAS
DESIGNED	
CHECKED	C. OLSON
DRAWN	P. VAN MEURS
DATE	JUNE 30, 2015
PROJECT NUMBER	215786

REGISTERED PROFESSIONAL ENGINEER
THEODORE H. KONTONICKAS
NO. 29378
EXP. 06/30/17
MECHANICAL
STATE OF CALIFORNIA
06-30-15

CITY OF PINOLE CALIFORNIA 1903

PINOLE/HERCULES
WATER POLLUTION
CONTROL PLANT UPGRADE
CLIENT PN

PROCESS
HEADWORKS
ODOR CONTROL FACILITY
PLAN AND SECTION

0 1" 2"

FILENAME	15P101
SCALE	1/4"=1'-0"

SHEET
15P101

NOTES:

1. REFER TO CONSTRUCTION SEQUENCING SHEETS FOR THE STAGING OF NEW FACILITIES.
2. SEE SHEET 03C103 FOR PROPOSED YARD PIPING IN THIS AREA.

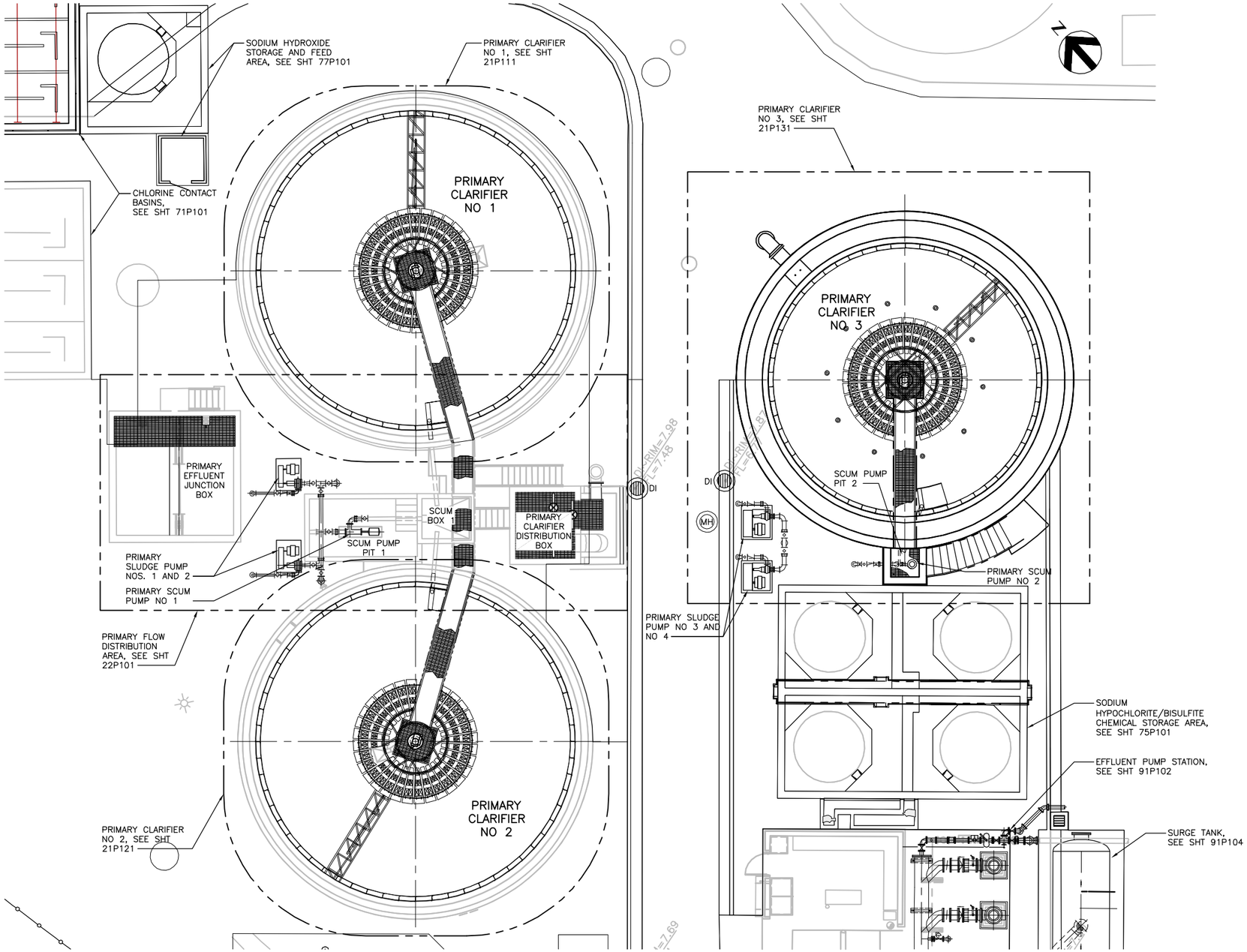

FILE: 215786-21P101.dwg
DATE: Oct 06, 2015-4:19:15pm, ranider

HDR Engineering, Inc.

ISSUE	DATE	DESCRIPTION
A	JUNE 2015	ISSUED FOR BID

PROJECT MANAGER	C. OLSON
DESIGNED	T. KONTONICKAS
DESIGNED	H. GERGES
CHECKED	C. OLSON
DRAWN	M. FOYLE
DATE	JUNE 30, 2015
PROJECT NUMBER	215786

REGISTERED PROFESSIONAL ENGINEER THEODORE H. KONTONICKAS NO. 29378 EXP. 06/30/17 MECHANICAL STATE OF CALIFORNIA

CITY OF PINOLE CALIFORNIA 1903

PINOLE/HERCULES WATER POLLUTION CONTROL PLANT UPGRADE CLIENT PN

PROCESS

PRIMARY CLARIFIERS KEY PLAN

0 1" 2"

FILENAME	215786-21P101
SCALE	1/8" = 1'-0"

SHEET **21P101**

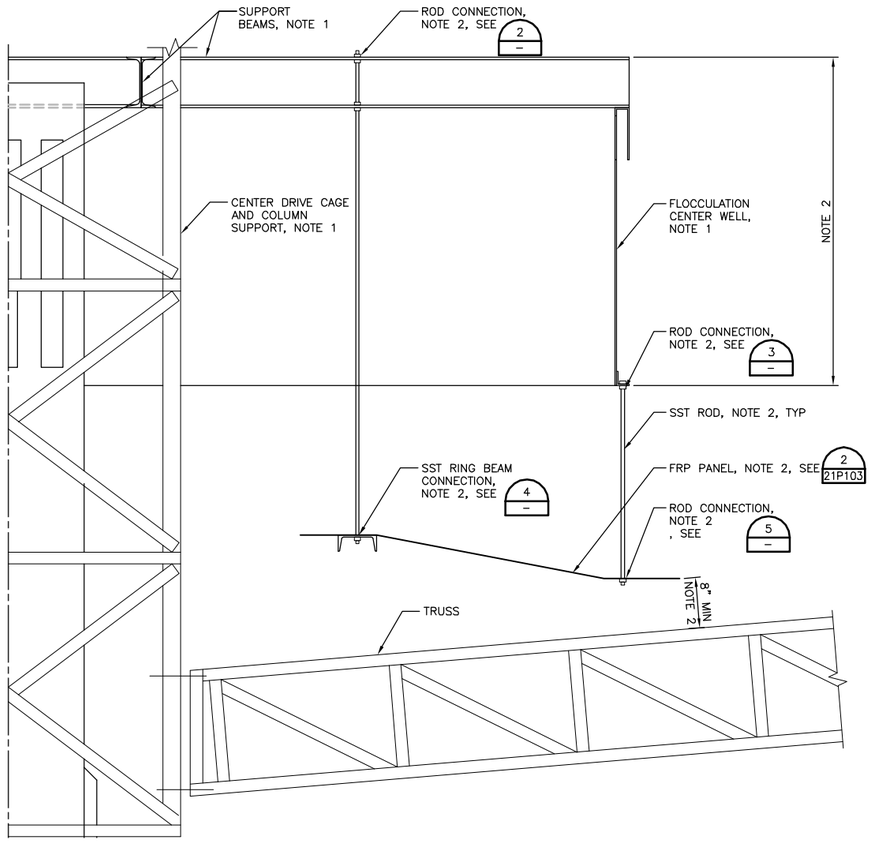

FRP SLUDGE PROTECTION BAFFLE SUPPORT DETAIL 1 (21P111, 21P121, 21P131)
1"=1'-0"

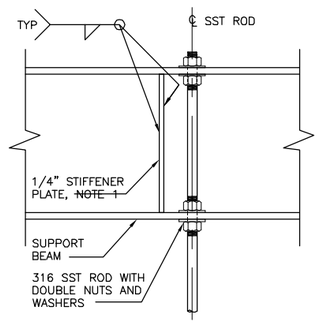

CROSS BEAM AND ROD CONNECTION DETAIL 2 –
3"=1'-0"

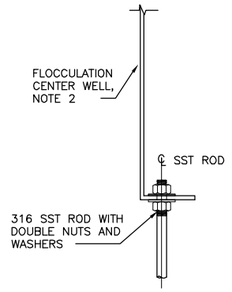

FLOCCULATION CENTER WELL BOTTOM EDGE DETAIL 3 –
3"=1'-0"

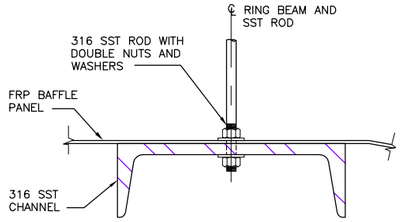

RING BEAM DETAIL 4 –
3"=1'-0"

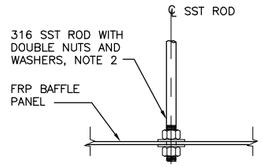

HANGER ROD AND FRP PANEL CONNECTION DETAIL 5 –
3"=1'-0"

NOTES:

1. CENTER COLUMN, SUPPORT CAGE, SLUDGE COLLECTOR AND SUPPORT, SLUDGE MANIFOLD, SCUM SKIMMER AND SUPPORT, SCUM BEACH AND SUPPORT, WALKWAY, PLATFORM, HANDRAILING, DRIVE MECHANISM, AND CONTROL PANEL PER CLARIFIER MECHANISM FABRICATOR (SEE SPECIFICATION SECTION 11125).
2. SEE SPECIFICATION SECTION 11151 FOR FRP SLUDGE PROTECTION SYSTEM, AND ITS SUPPORT SYSTEM, WEIRS AND SCUM PLATES (ALL SUPPLIED BY FRP FABRICATORS).

FILE: 215786-21P102.dwg
DATE: Oct 06, 2015--4:19:21pm, rsnider

HDR Engineering, Inc.

ISSUE	DATE	DESCRIPTION
A	JUNE 2015	ISSUED FOR BID

PROJECT MANAGER	C. OLSON
DESIGNED	T. KONTONICKAS
DESIGNED	H. GERGES
CHECKED	C. OLSON
DRAWN	M. FOYLE
DATE	JUNE 30, 2015
PROJECT NUMBER	215786

REGISTERED PROFESSIONAL ENGINEER
THEODORE H. KONTONICKAS
NO. 29378
EXP. 06/30/17
MECHANICAL
STATE OF CALIFORNIA
06-30-15

CITY OF PINOLE CALIFORNIA 1903

PINOLE/HERCULES
WATER POLLUTION
CONTROL PLANT UPGRADE
CLIENT PN

PROCESS

PRIMARY CLARIFIERS DETAILS 1

0 1" 2"

FILENAME	215786-21P102
SCALE	AS NOTED

SHEET **21P102**

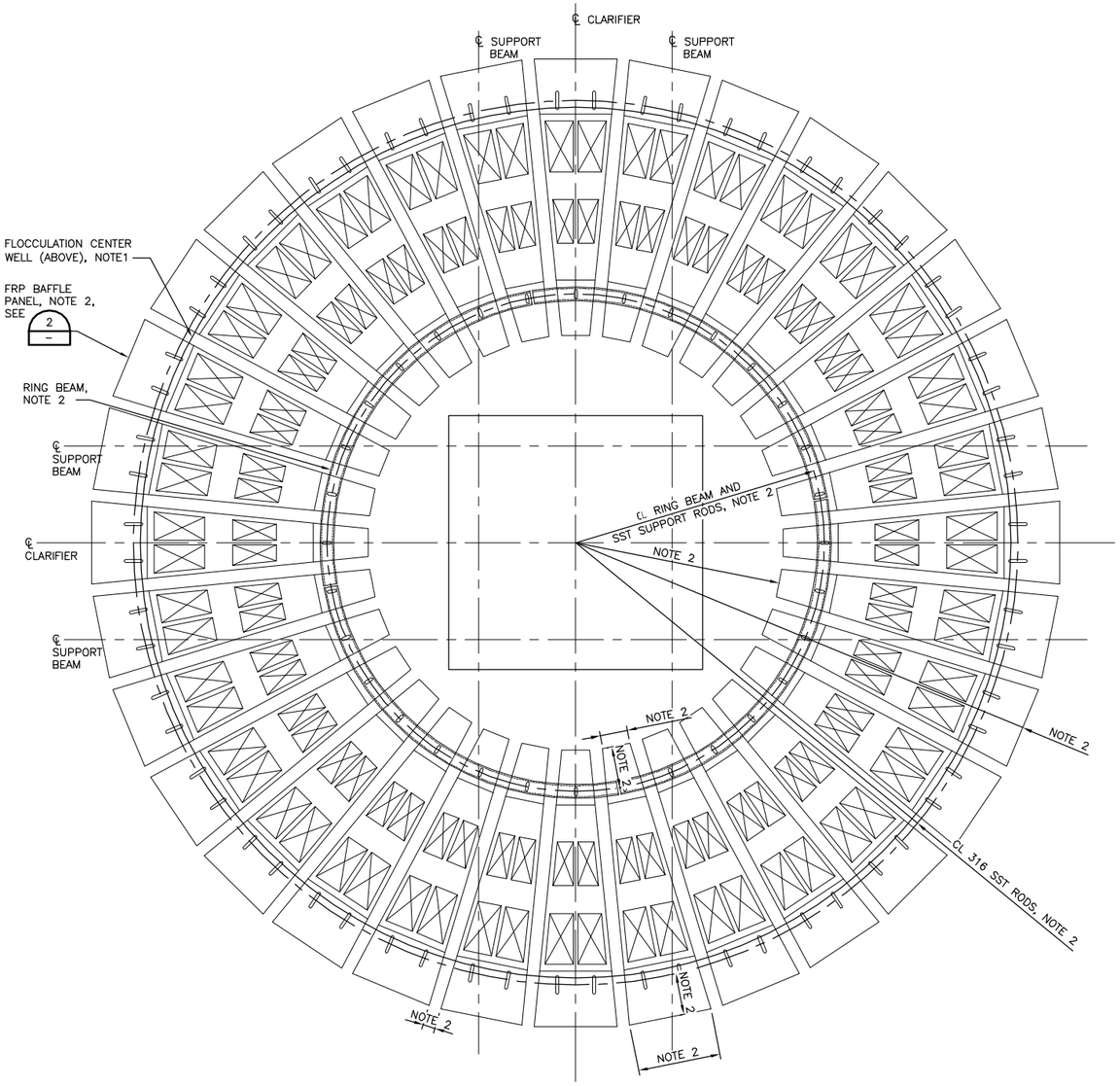

SLUDGE PROTECTION BAFFLE LAYOUT DETAIL

3/4"=1'-0"

1 — 21P111, 21P121, 21P131

NOTES:

1. CENTER COLUMN, SUPPORT CAGE, SLUDGE COLLECTOR AND SUPPORT, SLUDGE MANIFOLD, SCUM SKIMMER AND SUPPORT, SCUM BEACH AND SUPPORT, WALKWAY, PLATFORM, HANDRAILING, DRIVE MECHANISM, AND CONTROL PANEL PER CLARIFIER MECHANISM FABRICATOR (SEE SPECIFICATION SECTION 11125).
2. SEE SPECIFICATION SECTION 11151 FOR FRP SLUDGE PROTECTION SYSTEM, AND ITS SUPPORT SYSTEM, WEIRS AND SCUM PLATES (ALL SUPPLIED BY FRP FABRICATORS).
3. ALL FASTENERS TO BE 316 STAINLESS STEEL.

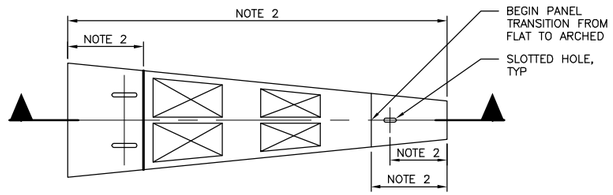

PLAN

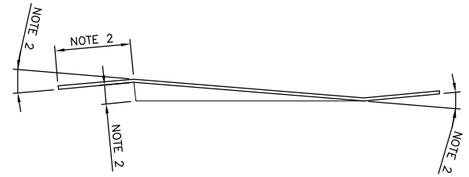

SECTION

FRP PANEL DETAIL – HORIZONTAL PROJECTION

1"=1'-0"

2 — 21P111, 21P121, 21P131

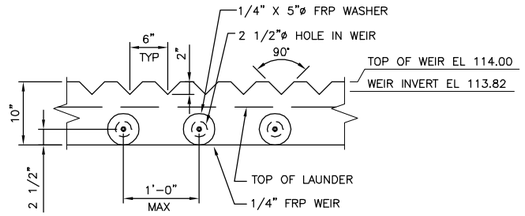

ELEVATION

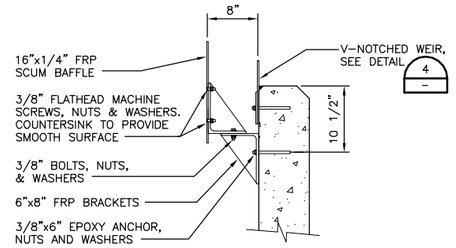

TYPICAL SECTION

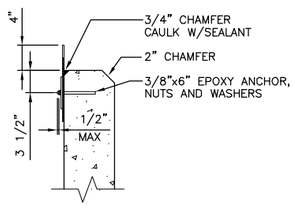

TYPICAL SECTION

SCUM BAFFLE DETAIL

1" = 1'-0"

3 — 21P111, 21P121, 21P131

V-NOTCH WEIR DETAIL

1" = 1'-0"

4 — 21P111, 21P121, 21P131

FILE: 215786-21P103.dwg
DATE: Oct 06, 2015-4:19:27pm, ranider

HDR Engineering, Inc.

ISSUE	DATE	DESCRIPTION
A	JUNE 2015	ISSUED FOR BID

PROJECT MANAGER	C. OLSON
DESIGNED	T. KONTONICKAS
DESIGNED	H. GERGES
CHECKED	C. OLSON
DRAWN	M. FOYLE
DATE	JUNE 30, 2015
PROJECT NUMBER	215786

REGISTERED PROFESSIONAL ENGINEER THEODORE H. KONTONICKAS NO. 29378 EXP. 06/30/17 MECHANICAL STATE OF CALIFORNIA 06-30-15

CITY OF PINOLE CALIFORNIA 1903

PINOLE/HERCULES WATER POLLUTION CONTROL PLANT UPGRADE CLIENT PN

PROCESS

PRIMARY CLARIFIERS DETAILS 2

0 1" 2"

FILENAME	215786-21P103
SCALE	AS NOTED

SHEET **21P103**

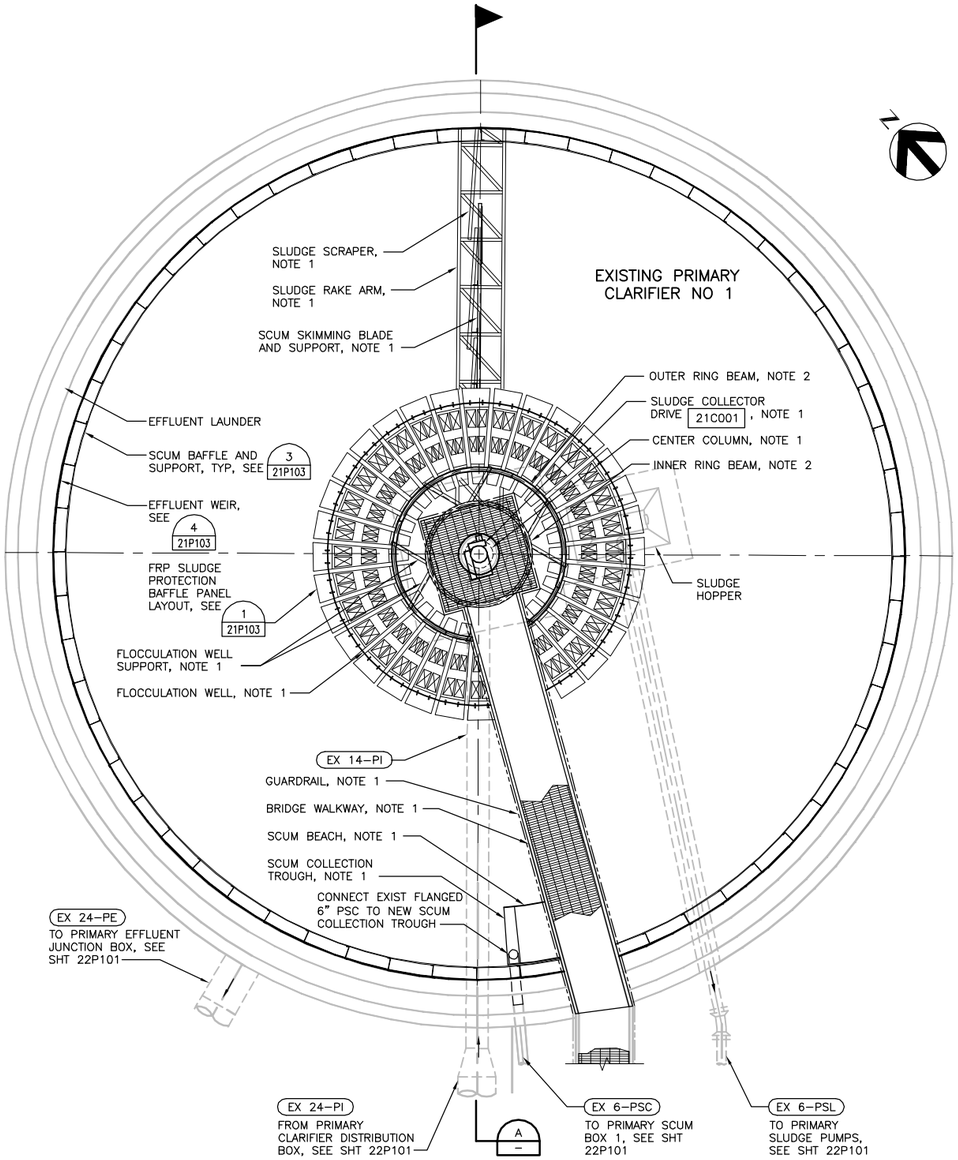

CLARIFIER NO 1 PLAN
1/4" = 1'-0"

NOTES:

1. CENTER COLUMN, SUPPORT CAGE, SLUDGE COLLECTOR AND SUPPORT, SLUDGE MANIFOLD, SCUM SKIMMER AND SUPPORT, SCUM BEACH AND SUPPORT, WALKWAY, PLATFORM, HANDRAILING, DRIVE MECHANISM, AND CONTROL PANEL PER CLARIFIER MECHANISM FABRICATOR (SEE SPECIFICATION SECTION 11125).
2. SEE SPECIFICATION SECTION 11151 FOR FRP SLUDGE PROTECTION SYSTEM, AND ITS SUPPORT SYSTEM, WEIRS AND SCUM PLATES (ALL SUPPLIED BY FRP FABRICATORS).

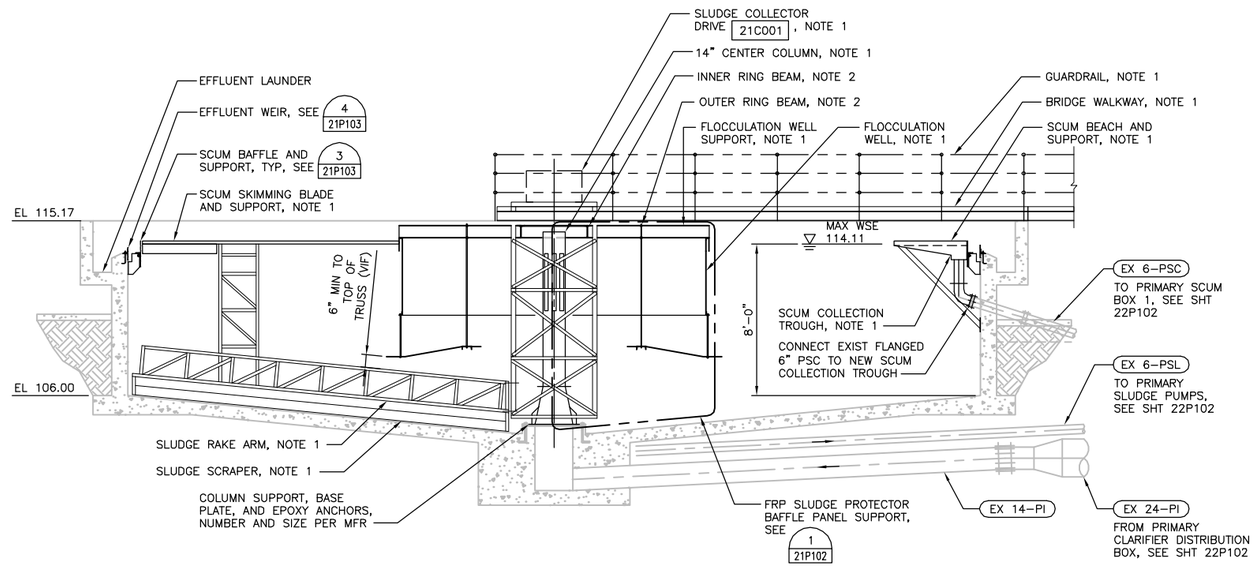

SECTION
1/4" = 1'-0"

FILE: 215786-21P111.dwg
DATE: Oct 06, 2015-4:19:35pm, ranider

HDR Engineering, Inc.

ISSUE	DATE	DESCRIPTION
A	JUNE 2015	ISSUED FOR BID

PROJECT MANAGER	C. OLSON
DESIGNED	T. KONTONICKAS
DESIGNED	H. GERGES
CHECKED	C. OLSON
DRAWN	M. FOYLE
DATE	JUNE 30, 2015
PROJECT NUMBER	215786

REGISTERED PROFESSIONAL ENGINEER THEODORE H. KONTONICKAS NO. 29378 EXP. 06/30/17 MECHANICAL STATE OF CALIFORNIA 06-30-15

CITY OF PINOLE CALIFORNIA 1903

PINOLE/HERCULES
WATER POLLUTION
CONTROL PLANT UPGRADE
CLIENT PN

PROCESS

EXISTING PRIMARY CLARIFIER NO 1 MODIFICATIONS PLAN AND SECTION

0 1" 2"

FILENAME	215786-21P111
SCALE	AS NOTED

SHEET **21P111**

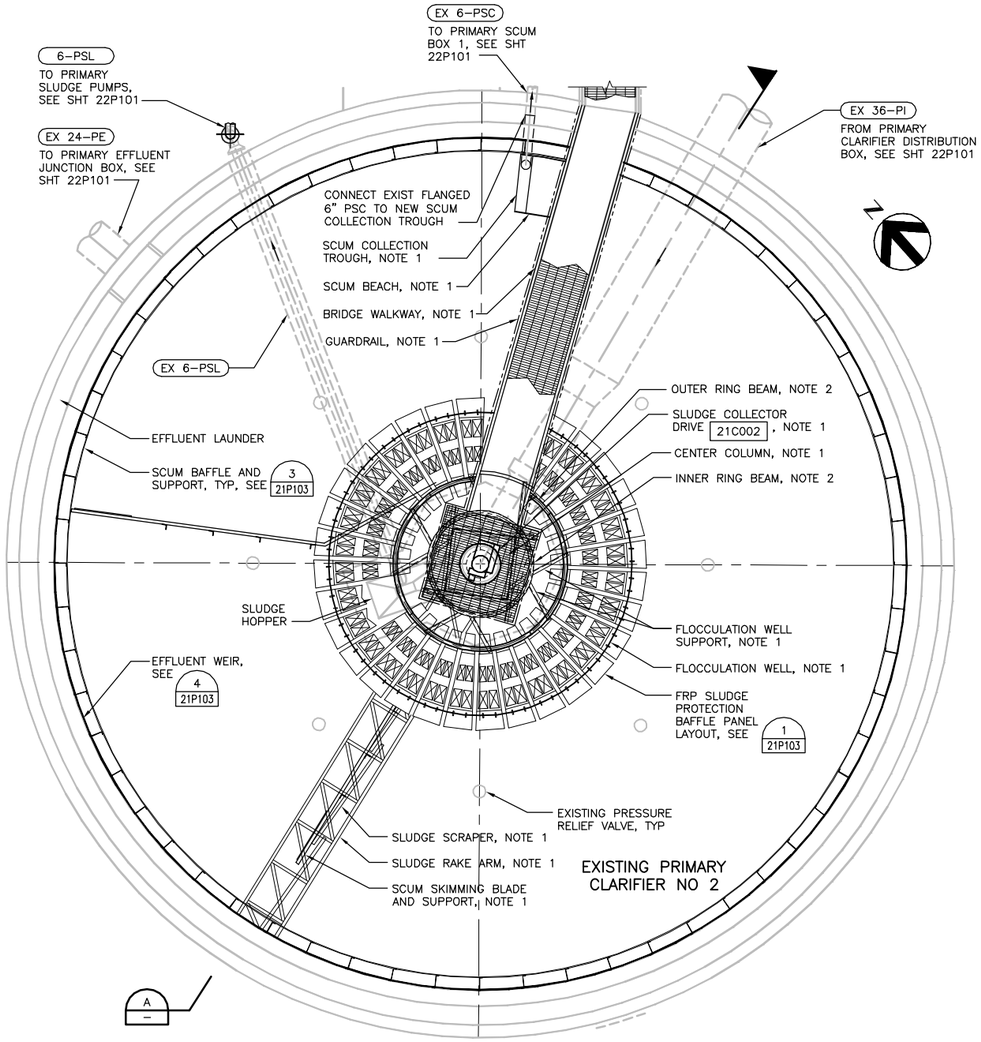

CLARIFIER NO 2 PLAN
1/4" = 1'–0"

NOTES:

1. CENTER COLUMN, SUPPORT CAGE, SLUDGE COLLECTOR AND SUPPORT, SLUDGE MANIFOLD, SCUM SKIMMER AND SUPPORT, SCUM BEACH AND SUPPORT, WALKWAY, PLATFORM, HANDRAILING, DRIVE MECHANISM, AND CONTROL PANEL PER CLARIFIER MECHANISM FABRICATOR (SEE SPECIFICATION SECTION 11125).
2. SEE SPECIFICATION SECTION 11151 FOR FRP SLUDGE PROTECTION SYSTEM, AND ITS SUPPORT SYSTEM, WEIRS AND SCUM PLATES (ALL SUPPLIED BY FRP FABRICATORS).

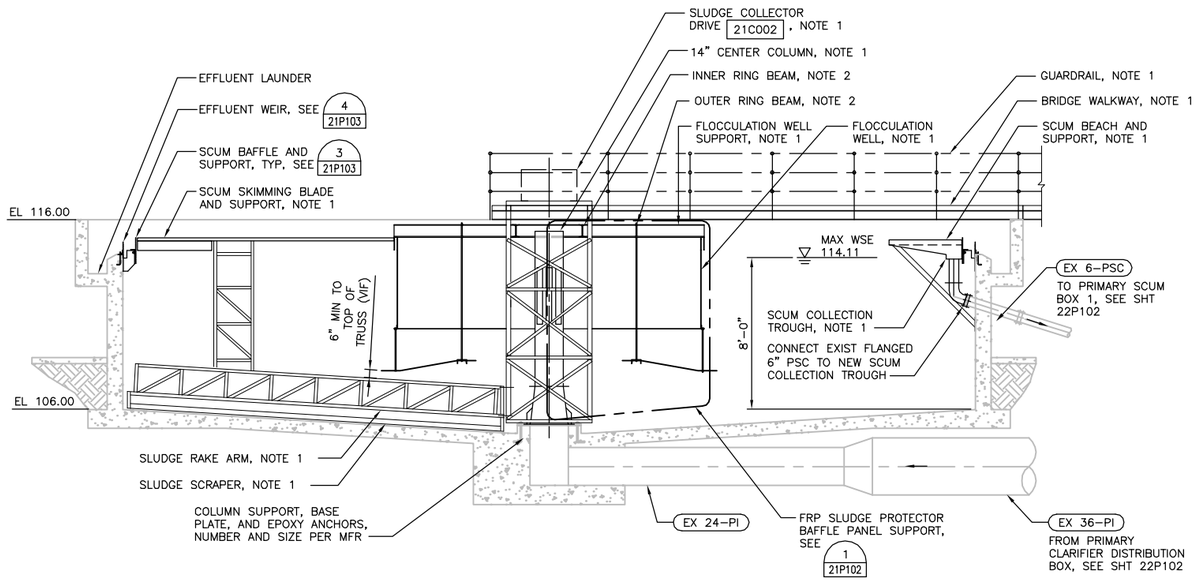

SECTION
1/4" = 1'–0"
A

FILE: 215786–21P121.dwg
DATE: Oct 06, 2015–4:19:39pm, ranider

HDR Engineering, Inc.

ISSUE	DATE	DESCRIPTION
A	JUNE 2015	ISSUED FOR BID

PROJECT MANAGER	C. OLSON
DESIGNED	T. KONTONICKAS
DESIGNED	H. GERGES
CHECKED	C. OLSON
DRAWN	M. FOYLE
DATE	JUNE 30, 2015
PROJECT NUMBER	215786

REGISTERED PROFESSIONAL ENGINEER THEODORE H. KONTONICKAS NO. 29378 EXP. 06/30/17 MECHANICAL STATE OF CALIFORNIA 06-30-15

CITY OF PINOLE CALIFORNIA 1903

PINOLE/HERCULES
WATER POLLUTION
CONTROL PLANT UPGRADE
CLIENT PN

PROCESS

EXISTING PRIMARY CLARIFIER NO 2 MODIFICATIONS PLAN AND SECTION

0 1" 2"

FILENAME	215786–21P121
SCALE	AS NOTED

SHEET **21P121**

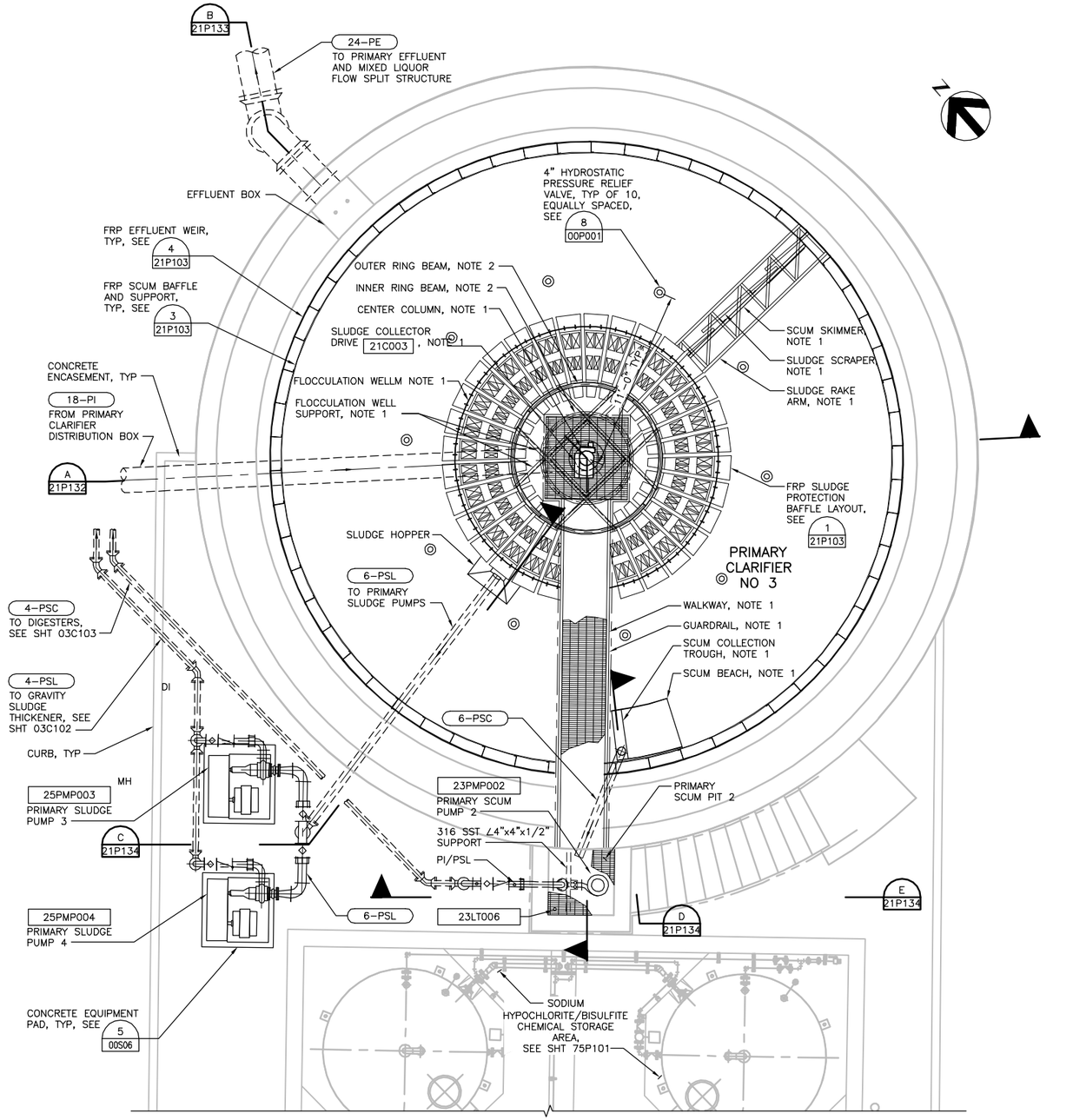

PRIMARY CLARIFIER NO 3 PLAN

1/4" = 1'-0"

NOTES:

1. CENTER COLUMN, SUPPORT CAGE, SLUDGE COLLECTOR AND SUPPORT, SLUDGE MANIFOLD, SCUM SKIMMER AND SUPPORT, SCUM BEACH AND SUPPORT, WALKWAY, PLATFORM, HANDRAILING, DRIVE MECHANISM, AND CONTROL PANEL PER CLARIFIER MECHANISM FABRICATOR (SEE SPECIFICATION SECTION 11125).
2. SEE SPECIFICATION SECTION 11151 FOR FRP SLUDGE PROTECTION SYSTEM, AND ITS SUPPORT SYSTEM, WEIRS AND SCUM PLATES (ALL SUPPLIED BY FRP FABRICATORS).

FILE: 215786-21P131.dwg
DATE: Oct 06, 2015-4:19:45pm, rsnider

HDR Engineering, Inc.

ISSUE	DATE	DESCRIPTION
A	JUNE 2015	ISSUED FOR BID

PROJECT MANAGER	C. OLSON
DESIGNED	T. KONTONICKAS
DESIGNED	H. GERGES
CHECKED	C. OLSON
DRAWN	M. FOYLE
DATE	JUNE 30, 2015
PROJECT NUMBER	215786

REGISTERED PROFESSIONAL ENGINEER THEODORE H. KONTONICKAS NO. 29378 EXP. 06/30/17 MECHANICAL STATE OF CALIFORNIA

CITY OF PINOLE CALIFORNIA 1903

PINOLE/HERCULES WATER POLLUTION CONTROL PLANT UPGRADE CLIENT PN

PROCESS

PRIMARY CLARIFIER NO 3 PLAN

0 1" 2"

FILENAME	215786-21P131
SCALE	AS NOTED

SHEET **21P131**

NOTES:

1. CENTER COLUMN, SUPPORT CAGE, SLUDGE COLLECTOR AND SUPPORT, SLUDGE MANIFOLD, SCUM SKIMMER AND SUPPORT, SCUM BEACH AND SUPPORT, WALKWAY, PLATFORM, HANDRAILING, DRIVE MECHANISM, AND CONTROL PANEL PER CLARIFIER MECHANISM FABRICATOR (SEE SPECIFICATION SECTION 11125).
2. SEE SPECIFICATION SECTION 11151 FOR FRP SLUDGE PROTECTION SYSTEM, AND ITS SUPPORT SYSTEM, WEIRS AND SCUM PLATES (ALL SUPPLIED BY FRP FABRICATORS).

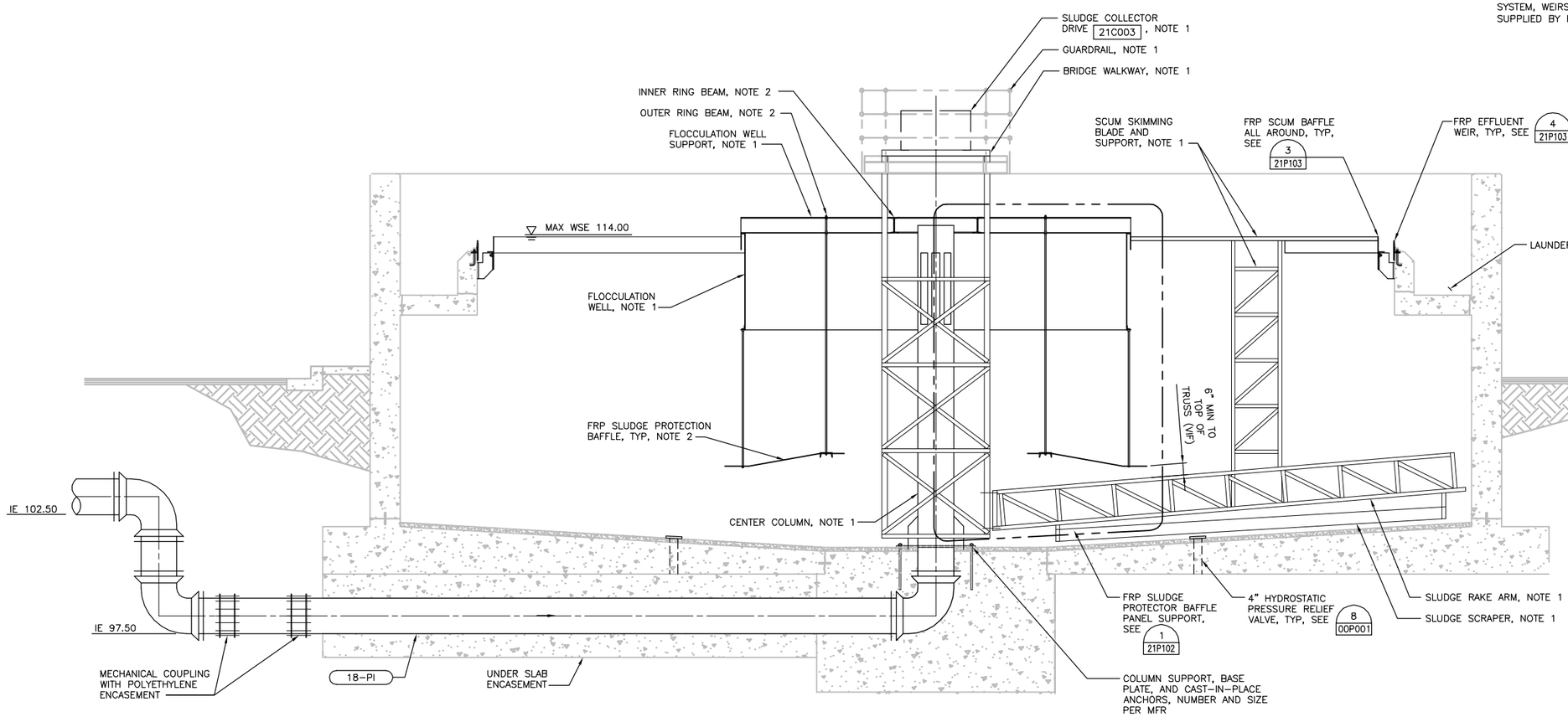

SECTION A 21P131
3/8" = 1'-0"

FILE: 215786-21P132.dwg
DATE: Oct 06, 2015-4:19:51pm, rsnider

HDR Engineering, Inc.

ISSUE	DATE	DESCRIPTION
A	JUNE 2015	ISSUED FOR BID

PROJECT MANAGER	C. OLSON
DESIGNED	T. KONTONICKAS
DESIGNED	H. GERGES
CHECKED	C. OLSON
DRAWN	M. FOYLE
DATE	JUNE 30, 2015
PROJECT NUMBER	215786

REGISTERED PROFESSIONAL ENGINEER THEODORE H. KONTONICKAS NO. 29378 EXP. 06/30/17 MECHANICAL STATE OF CALIFORNIA 06-30-15

CITY OF PINOLE CALIFORNIA 1903

PINOLE/HERCULES
WATER POLLUTION
CONTROL PLANT UPGRADE
CLIENT PN

PROCESS

PRIMARY CLARIFIER NO 3
SECTION 1

0 1" 2"

FILENAME	215786-21P132
SCALE	AS NOTED

SHEET
21P132

NOTES:

1. CENTER COLUMN, SUPPORT CAGE, SLUDGE COLLECTOR AND SUPPORT, SLUDGE MANIFOLD, SCUM SKIMMER AND SUPPORT, SCUM BEACH AND SUPPORT, WALKWAY, PLATFORM, HANDRAILING, DRIVE MECHANISM, AND CONTROL PANEL PER CLARIFIER MECHANISM FABRICATOR (SEE SPECIFICATION SECTION 11125).
2. SEE SPECIFICATION SECTION 11151 FOR FRP SLUDGE PROTECTION SYSTEM, AND ITS SUPPORT SYSTEM, WEIRS AND SCUM PLATES (ALL SUPPLIED BY FRP FABRICATORS).

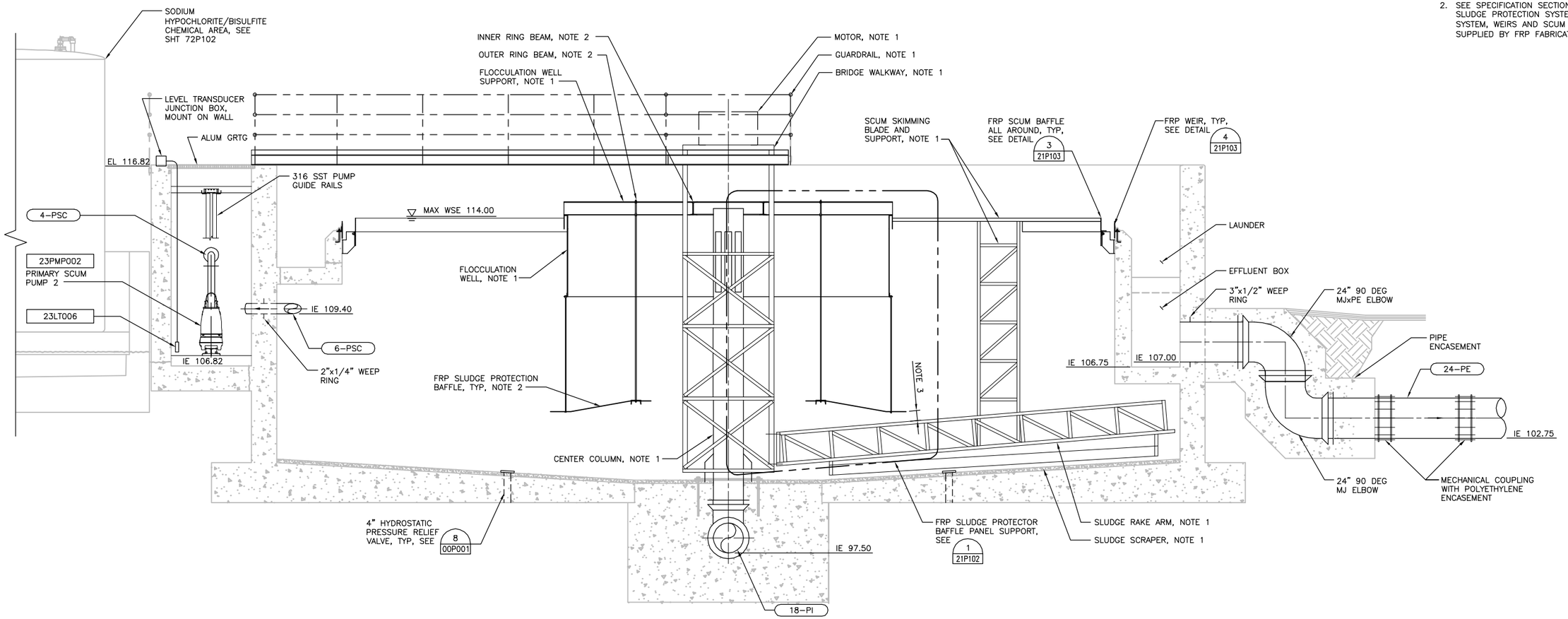

SECTION
3/8" = 1'–0"

B 21P131

FILE: 215786–21P133.dwg
DATE: Oct 06, 2015–4:19:57pm, ranider

HDR Engineering, Inc.

ISSUE	DATE	DESCRIPTION
A	JUNE 2015	ISSUED FOR BID

PROJECT MANAGER	C. OLSON
DESIGNED	T. KONTONICKAS
DESIGNED	H. GERGES
CHECKED	C. OLSON
DRAWN	M. FOYLE
DATE	JUNE 30, 2015
PROJECT NUMBER	215786

REGISTERED PROFESSIONAL ENGINEER — THEODORE H. KONTONICKAS — NO. 29378 EXP. 06/30/17 — MECHANICAL — STATE OF CALIFORNIA — 06-30-15

CITY OF PINOLE CALIFORNIA 1903

PINOLE/HERCULES WATER POLLUTION CONTROL PLANT UPGRADE CLIENT PN

PROCESS

PRIMARY CLARIFIER NO 3 SECTION 2

0 1" 2"

FILENAME	215786–21P133
SCALE	AS NOTED

SHEET **21P133**

NOTES:

1. CENTER COLUMN, SUPPORT CAGE, SLUDGE COLLECTOR AND SUPPORT, SLUDGE MANIFOLD, SCUM SKIMMER AND SUPPORT, SCUM BEACH AND SUPPORT, WALKWAY, PLATFORM, HANDRAILING, DRIVE MECHANISM, AND CONTROL PANEL PER CLARIFIER MECHANISM FABRICATOR (SEE SPECIFICATION SECTION 11125).
2. SEE SPECIFICATION SECTION 11151 FOR FRP SLUDGE PROTECTION SYSTEM, AND ITS SUPPORT SYSTEM, WEIRS AND SCUM PLATES (ALL SUPPLIED BY FRP FABRICATORS).

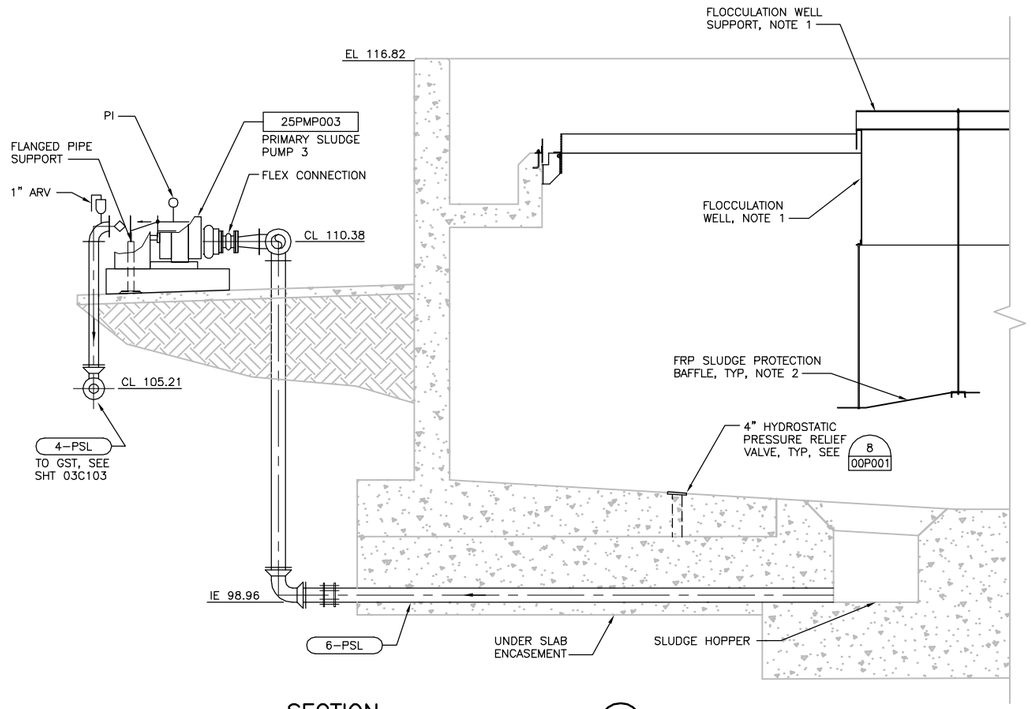

SECTION C
3/8" = 1'-0"
21P131

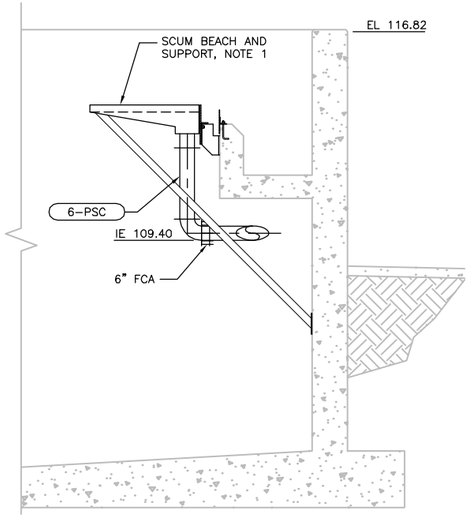

SECTION D
3/8" = 1'-0"
21P131

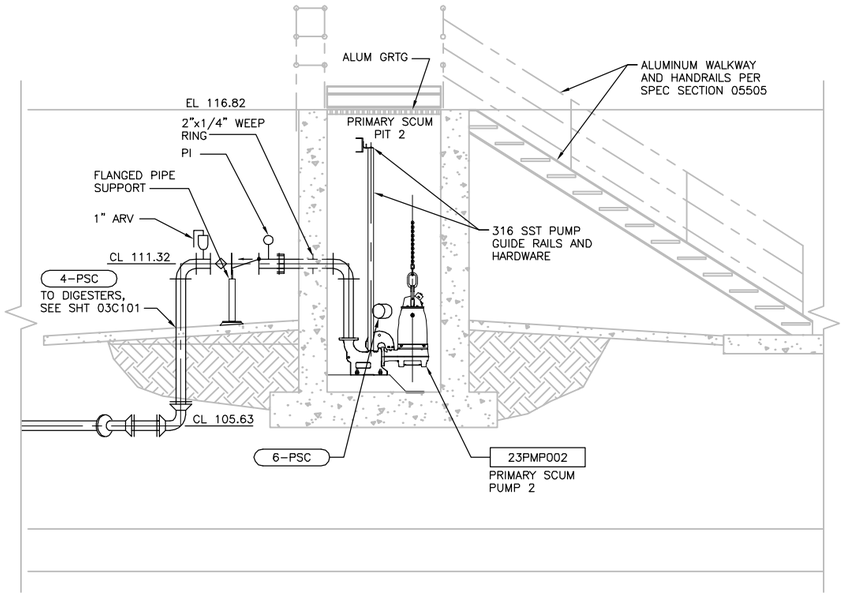

SECTION E
3/8" = 1'-0"
21P131

FILE: 215786-21P134.dwg
DATE: Oct 06, 2015--4:20:04pm, ranider

HDR Engineering, Inc.

ISSUE	DATE	DESCRIPTION
A	JUNE 2015	ISSUED FOR BID

PROJECT MANAGER	C. OLSON
DESIGNED	T. KONTONICKAS
DESIGNED	H. GERGES
CHECKED	C. OLSON
DRAWN	M. FOYLE
DATE	JUNE 30, 2015
PROJECT NUMBER	215786

REGISTERED PROFESSIONAL ENGINEER
THEODORE H. KONTONICKAS
NO. 29378
EXP. 06/30/17
MECHANICAL
STATE OF CALIFORNIA
06-30-15

CITY OF PINOLE CALIFORNIA 1903

PINOLE/HERCULES
WATER POLLUTION
CONTROL PLANT UPGRADE
CLIENT PN

PROCESS

PRIMARY CLARIFIER NO 3
SECTIONS 3

0 1" 2"

FILENAME	215786-21P134
SCALE	AS NOTED

SHEET
21P134

NOTES:

1. FIELD VERIFY SIZE OF NEW GRATING. GRATING SHALL BE ALUMINUM.
2. PROVIDE FIXED 304 SS STRAIGHT WEIR IN EXISTING GATE SLOTS. MINIMUM THICKNESS TO MATCH EXISTING (1/2"). FIELD VERIFY ALL DIMENSIONS PRIOR TO FABRICATION SEAL EDGES AFTER INSTALLATION.
3. CONTRACTOR TO REMOVE AND DISPOSE OF GRIT FOUND IN BASINS. ASSUME NO LESS THAN 3 CUBIC YARDS.

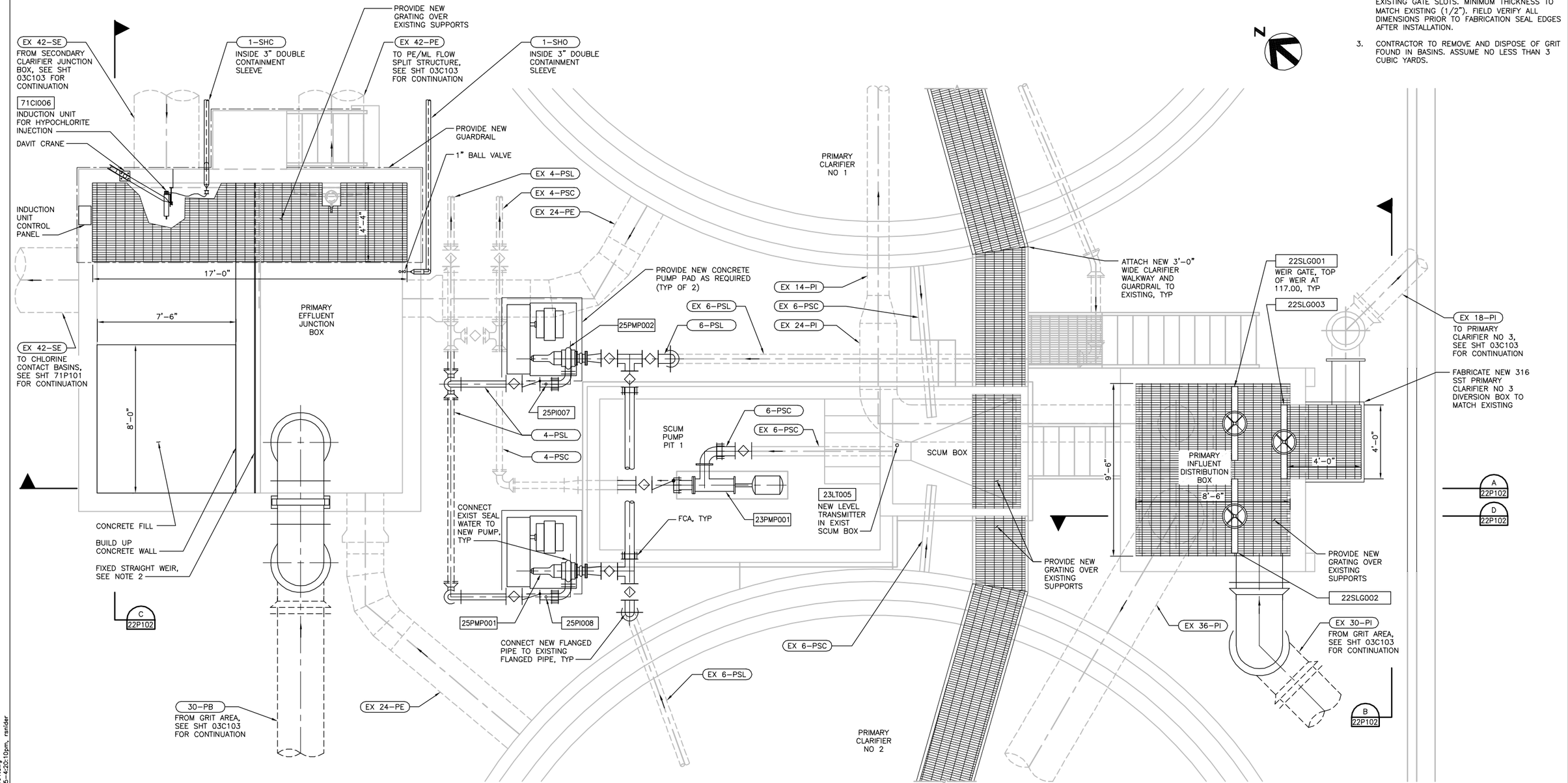

PLAN
3/8" = 1'–0"

FILE: 215786–22P101.dwg
DATE: Oct 06, 2015–4:20:10pm, ranider

HDR Engineering, Inc.

ISSUE	DATE	DESCRIPTION
A	JUNE 2015	ISSUED FOR BID

PROJECT MANAGER	C. OLSON
DESIGNED	T. KONTONICKAS
DESIGNED	
CHECKED	C. OLSON
DRAWN	M. FOYLE
DATE	JUNE 30, 2015
PROJECT NUMBER	215786

REGISTERED PROFESSIONAL ENGINEER THEODORE H. KONTONICKAS NO. 29378 EXP. 06/30/17 MECHANICAL STATE OF CALIFORNIA 06-30-15

CITY OF PINOLE CALIFORNIA 1903

PINOLE/HERCULES WATER POLLUTION CONTROL PLANT UPGRADE CLIENT PN

PROCESS

EXISTING PRIMARY FLOW DISTRIBUTION MODIFICATIONS PLAN

0 1" 2"

FILENAME	215786–22P101
SCALE	AS NOTED

SHEET **22P101**

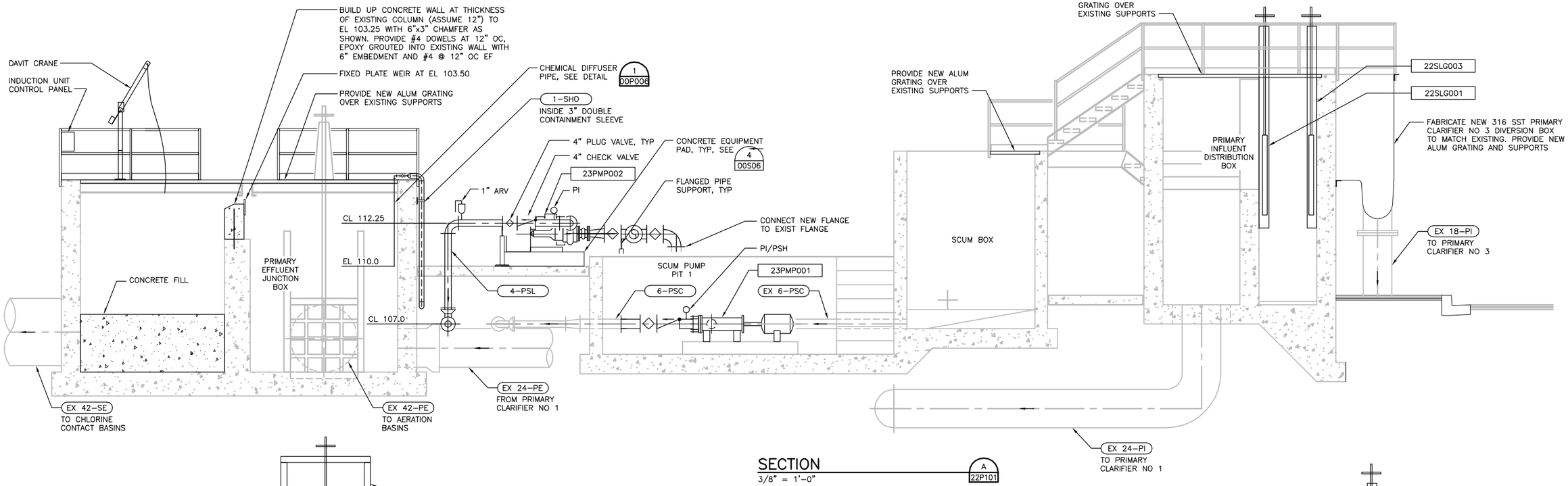

SECTION
3/8" = 1'-0"
A 22P101

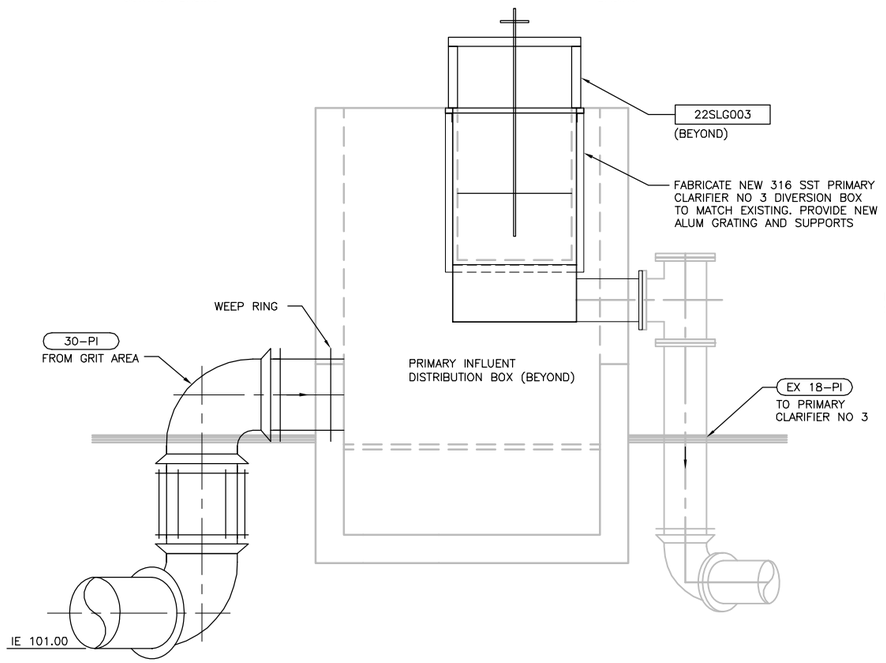

SECTION
3/8" = 1'-0"
B 22P101

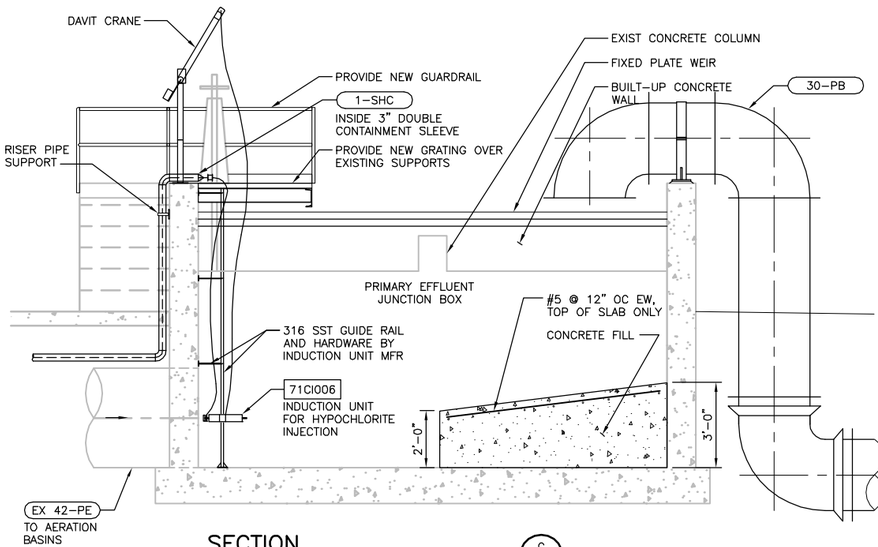

SECTION
3/8" = 1'-0"
C 22P101

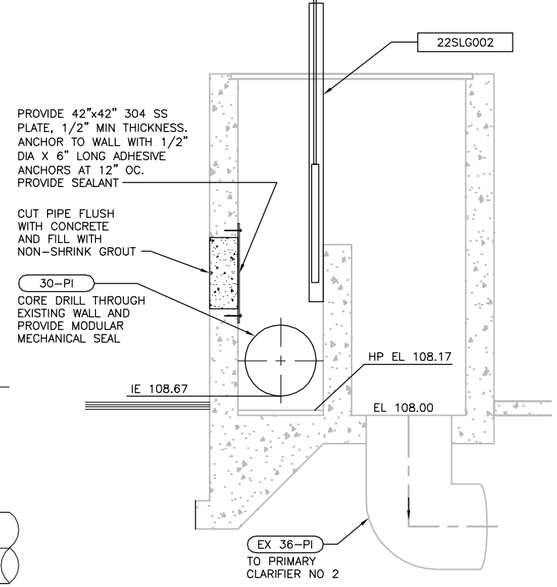

SECTION
3/8" = 1'-0"
D 22P101

FILE: 215786-22P102.dwg
DATE: Oct 06, 2015-4:20:16pm, rander

HDR Engineering, Inc.

ISSUE	DATE	DESCRIPTION
A	JUNE 2015	ISSUED FOR BID

PROJECT MANAGER	C. OLSON
DESIGNED	T. KONTONICKAS
DESIGNED	
CHECKED	C. OLSON
DRAWN	M. FOYLE
DATE	JUNE 30, 2015
PROJECT NUMBER	215786

REGISTERED PROFESSIONAL ENGINEER THEODORE H. KONTONICKAS NO. 29378 EXP. 06/30/17 MECHANICAL STATE OF CALIFORNIA 06-30-15

CITY OF PINOLE CALIFORNIA 1903

PINOLE/HERCULES
WATER POLLUTION
CONTROL PLANT UPGRADE
CLIENT PN

PROCESS

EXISTING PRIMARY FLOW DISTRIBUTION MODIFICATIONS SECTIONS

0 1" 2"

FILENAME	215786-22P102
SCALE	AS NOTED

SHEET **22P102**

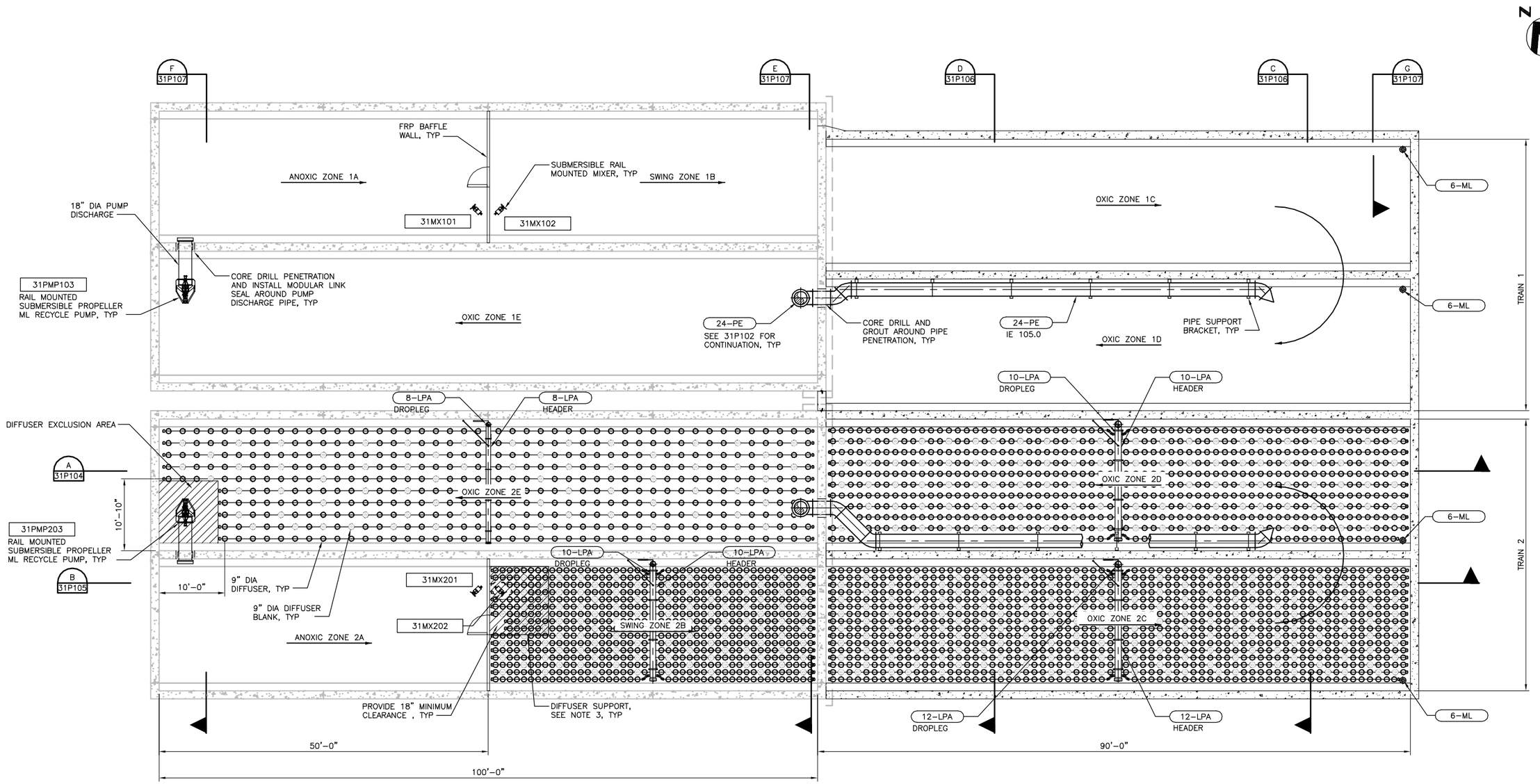

PLAN
1/8"=1'-0"M

NOTES:

1. TRAIN 1 AIR DIFFUSER CONFIGURATION SYMMETRICAL.
2. FINAL DIFFUSER CONFIGURATION PER MANUFACTURER RECOMMENDATIONS.
3. IN DESIGNATED AREA, DIFFUSER MANUFACTURER TO DESIGN LPA MANIFOLD AND HEADER SUPPORTS FOR THRUST LOADS FROM OPERATION OF SUBMERSIBLE MIXER. MAXIMUM PIPE SUPPORT SPACING IN DESIGNATED AREA IS 4 FOOT ON CENTER.

FILE: 215786-31P101.dwg
DATE: Oct 06, 2015-4:20:23pm, rsnider

HDR Engineering, Inc.

ISSUE	DATE	DESCRIPTION
A	JUNE 2015	ISSUED FOR BID

PROJECT MANAGER	C. OLSON
DESIGNED	T. KONTONICKAS
DESIGNED	T. KONTONICKAS
CHECKED	C. OLSON
DRAWN	B. DOWN
DATE	JUNE 30, 2015
PROJECT NUMBER	215786

REGISTERED PROFESSIONAL ENGINEER
CRAIG A. OLSON
NO. 39819
EXP. 12/31/15
CIVIL
STATE OF CALIFORNIA
06-30-15

CITY OF PINOLE CALIFORNIA 1903

PINOLE/HERCULES
WATER POLLUTION
CONTROL PLANT UPGRADE
CLIENT PN

PROCESS

EXISTING AERATION BASINS LOWER LEVEL EXPANSION PLAN

0 1" 2"

FILENAME	215786-31P101
SCALE	AS NOTED

SHEET
31P101

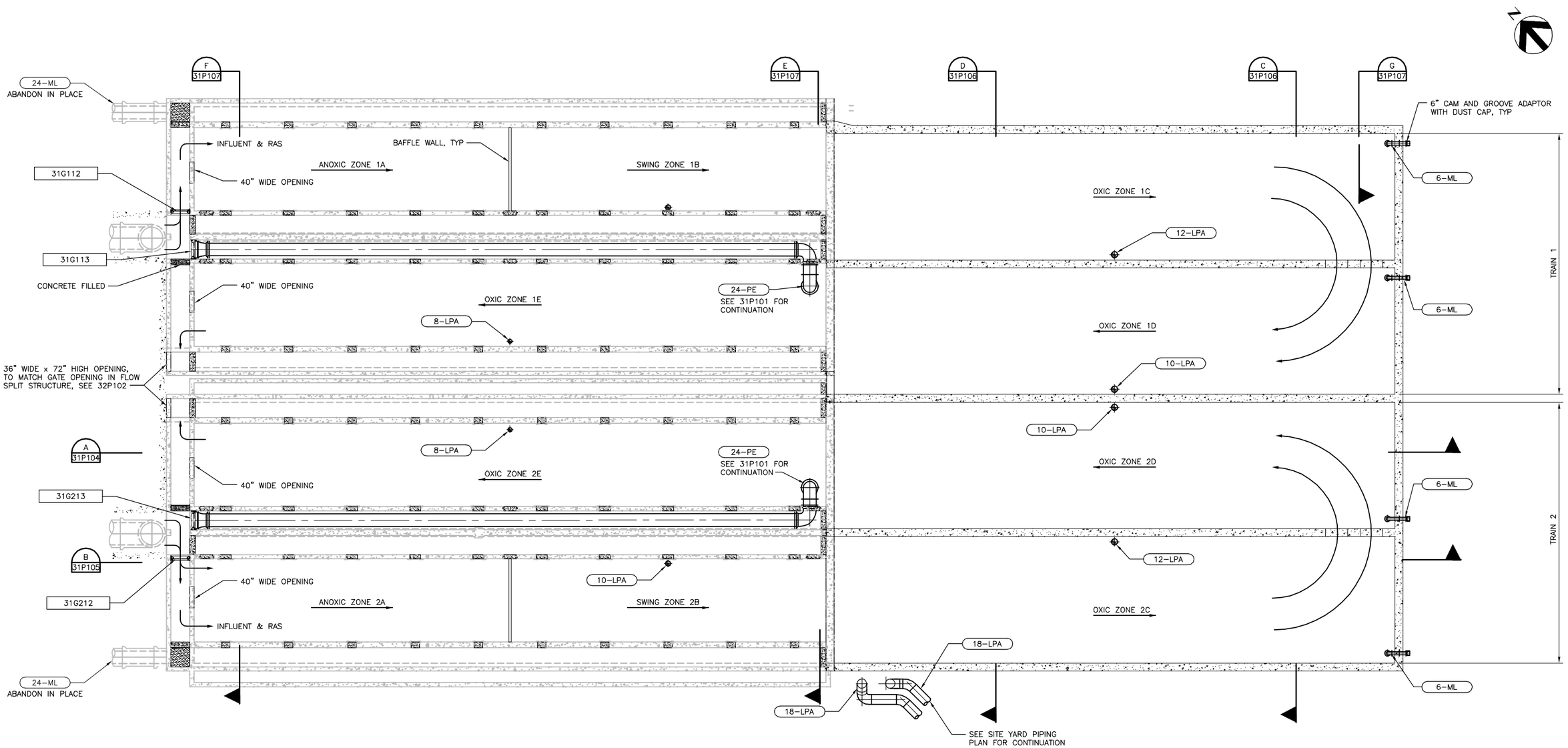

PLAN
1/8" = 1'-0"

FILE: 215786-31P102.dwg
DATE: Oct 06, 2015-4:20:31pm, rsnider

HDR Engineering, Inc.

ISSUE	DATE	DESCRIPTION
A	JUNE 2015	ISSUED FOR BID

PROJECT MANAGER	C. OLSON
DESIGNED	T. KONTONICKAS
DESIGNED	
CHECKED	C. OLSON
DRAWN	B.DOWN
DATE	JUNE 30, 2015
PROJECT NUMBER	215786

REGISTERED PROFESSIONAL ENGINEER
CRAIG A. OLSON
NO. 39819
EXP. 12/31/15
CIVIL
STATE OF CALIFORNIA
06-30-15

CITY OF PINOLE CALIFORNIA 1903

PINOLE/HERCULES
WATER POLLUTION
CONTROL PLANT UPGRADE
CLIENT PN

PROCESS

EXISTING AERATION BASINS CHANNEL LEVEL EXPANSION PLAN

0 1" 2"

FILENAME	215786-31P102
SCALE	AS NOTED

SHEET
31P102

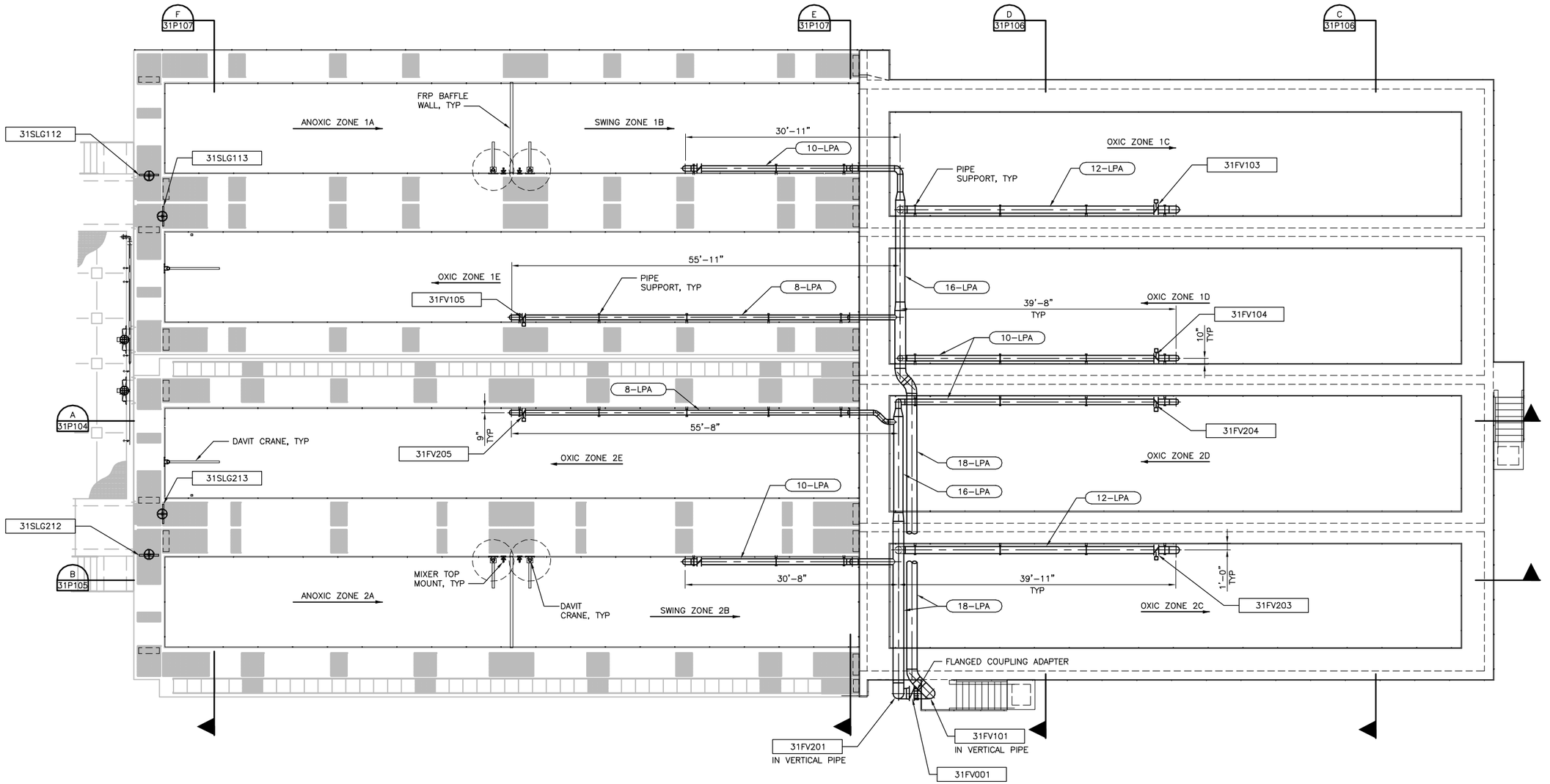

FILE: 215786-31P103.dwg
DATE: Oct 06, 2015-4:20:38pm, ranider

HDR Engineering, Inc.

ISSUE	DATE	DESCRIPTION
A	JUNE 2015	ISSUED FOR BID

PROJECT MANAGER	C. OLSON
DESIGNED	T. KONTONICKAS
DESIGNED	
CHECKED	C. OLSON
DRAWN	B. DOWN
DATE	JUNE 30, 2015
PROJECT NUMBER	215786

REGISTERED PROFESSIONAL ENGINEER
CRAIG A. OLSON
NO. 39819
EXP. 12/31/15
CIVIL
STATE OF CALIFORNIA
06-30-15

CITY OF PINOLE CALIFORNIA 1903

PINOLE/HERCULES
WATER POLLUTION
CONTROL PLANT UPGRADE
CLIENT PN

PROCESS

EXISTING AERATION BASINS
DECK LEVEL EXPANSION PLAN

0 1" 2"

FILENAME	215786-31P103
SCALE	AS NOTED

SHEET
31P103

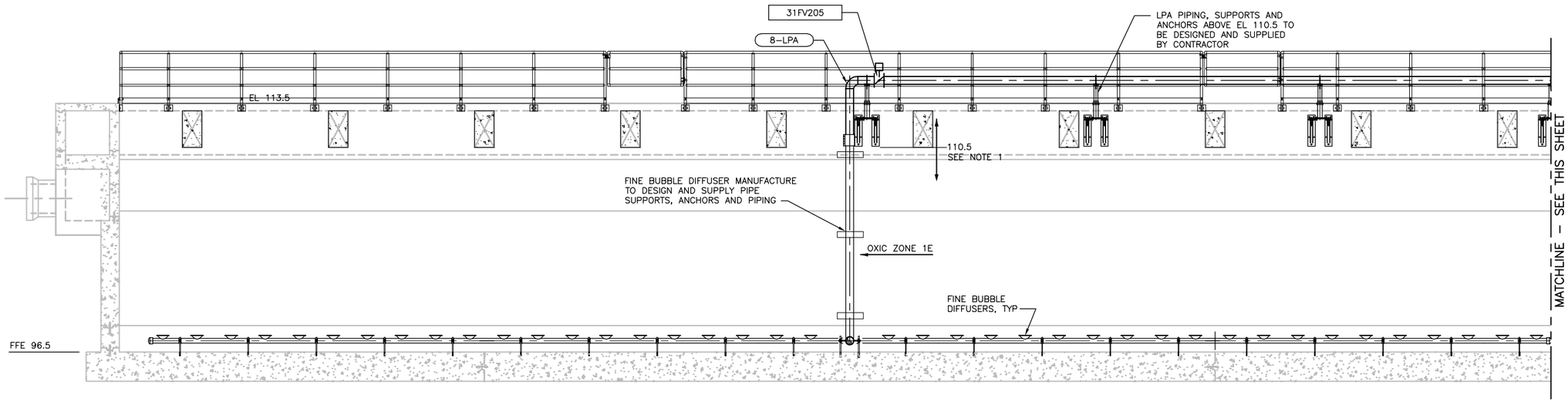

SECTION
1/4" = 1'-0"
A 31P101

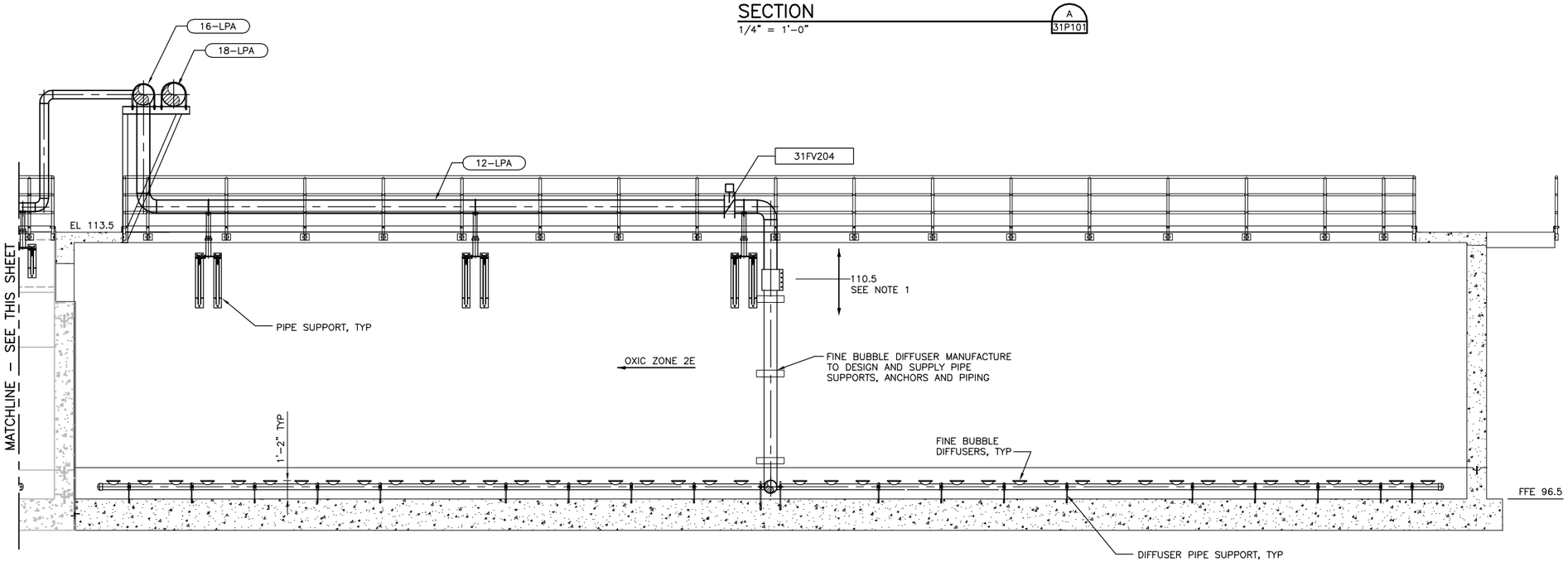

SECTION
1/4" = 1'-0"
A 31P101

FILE: 215786-31P104.dwg
DATE: Oct 06, 2015-4:20:46pm, ranider

HDR Engineering, Inc.

ISSUE	DATE	DESCRIPTION
A	JUNE 2015	ISSUED FOR BID

PROJECT MANAGER	C. OLSON
DESIGNED	T. KONTONICKAS
DESIGNED	
CHECKED	C. OLSON
DRAWN	B. DOWN
DATE	JUNE 30, 2015
PROJECT NUMBER	215786

REGISTERED PROFESSIONAL ENGINEER
CRAIG A. OLSON
NO. 39819
EXP. 12/31/15
CIVIL
STATE OF CALIFORNIA
06-30-15

CITY OF PINOLE CALIFORNIA 1903

PINOLE/HERCULES
WATER POLLUTION
CONTROL PLANT UPGRADE
CLIENT PN

PROCESS

EXISTING AERATION BASINS EXPANSION SECTIONS

0 1" 2"

FILENAME	215786-31P104
SCALE	AS NOTED

SHEET
31P104

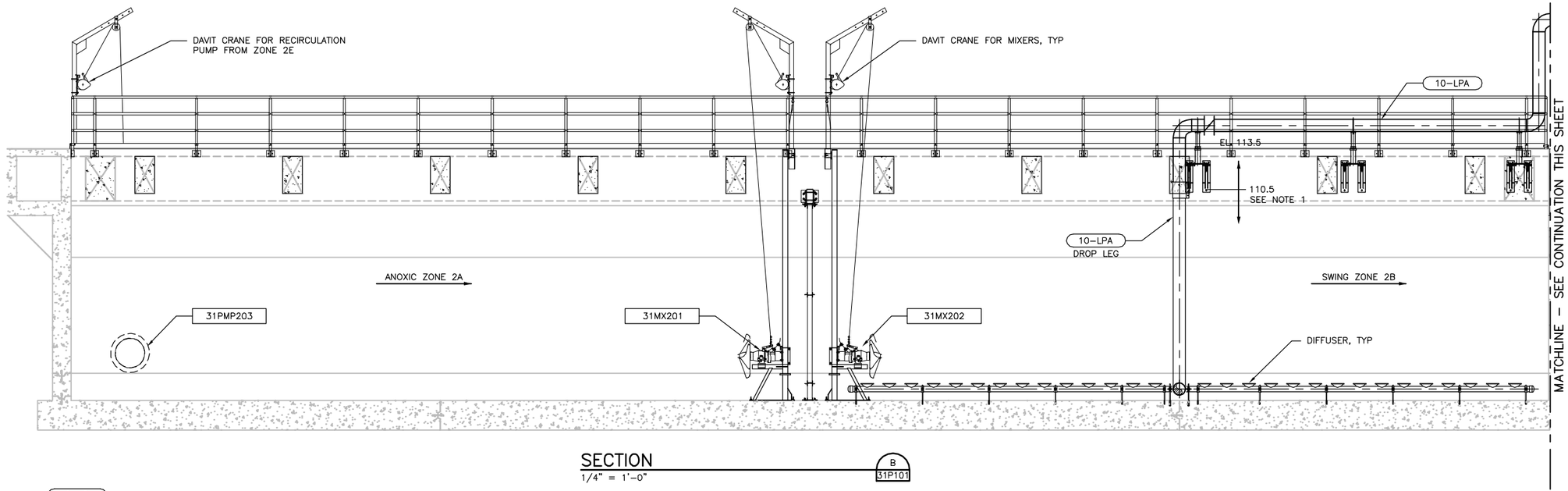

SECTION
1/4" = 1'-0"
B
31P101

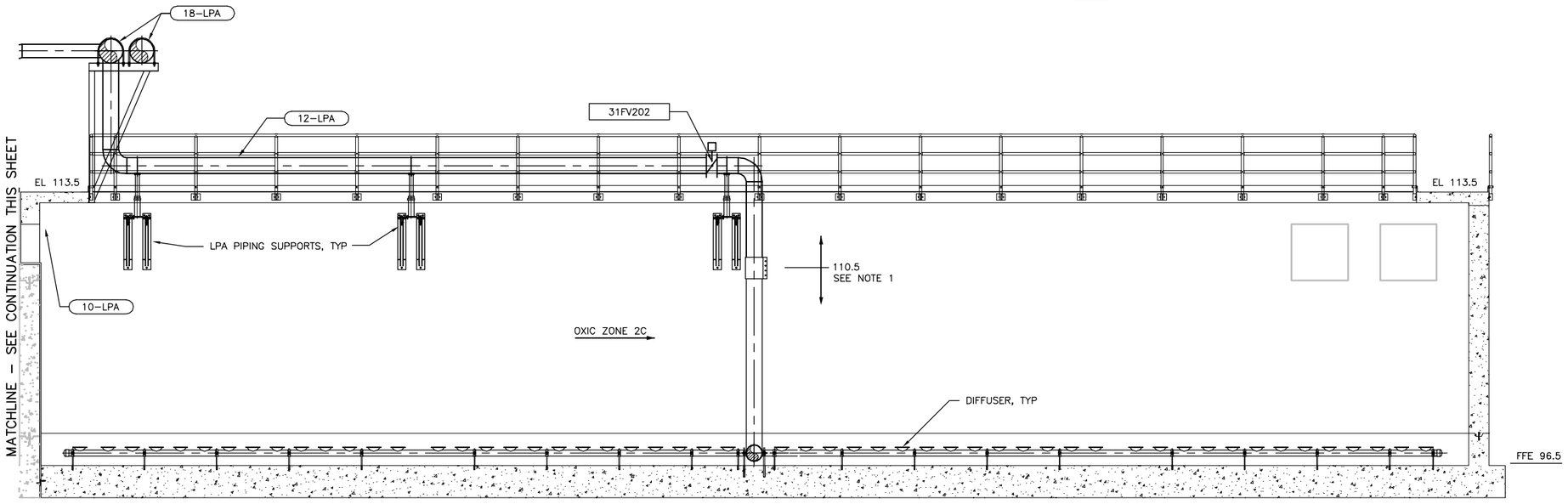

SECTION
1/4" = 1'-0"
B
31P101

NOTES:
1. ALL LPA PIPING, SUPPORTS AND ANCHORS BELOW EL. 110.5 TO BE DESIGNED BY FINE BUBBLE DIFFUSER MANUFACTURER.

FILE: 215786-31P105.dwg
DATE: Oct 06, 2015-4:20:57pm, rsnider

HDR Engineering, Inc.

ISSUE	DATE	DESCRIPTION
A	JUNE 2015	ISSUED FOR BID

PROJECT MANAGER	C. OLSON
DESIGNED	T. KONTONICKAS
DESIGNED	
CHECKED	C. OLSON
DRAWN	B. DOWN
DATE	JUNE 30, 2015
PROJECT NUMBER	215786

REGISTERED PROFESSIONAL ENGINEER
CRAIG A. OLSON
NO. 39819
EXP. 12/31/15
CIVIL
STATE OF CALIFORNIA
06-30-15

CITY OF PINOLE CALIFORNIA 1903

PINOLE/HERCULES
WATER POLLUTION
CONTROL PLANT UPGRADE
CLIENT PN

PROCESS

EXISTING AERATION BASINS EXPANSION SECTIONS

0 1" 2"

FILENAME	215786-31P105
SCALE	AS NOTED

SHEET
31P105

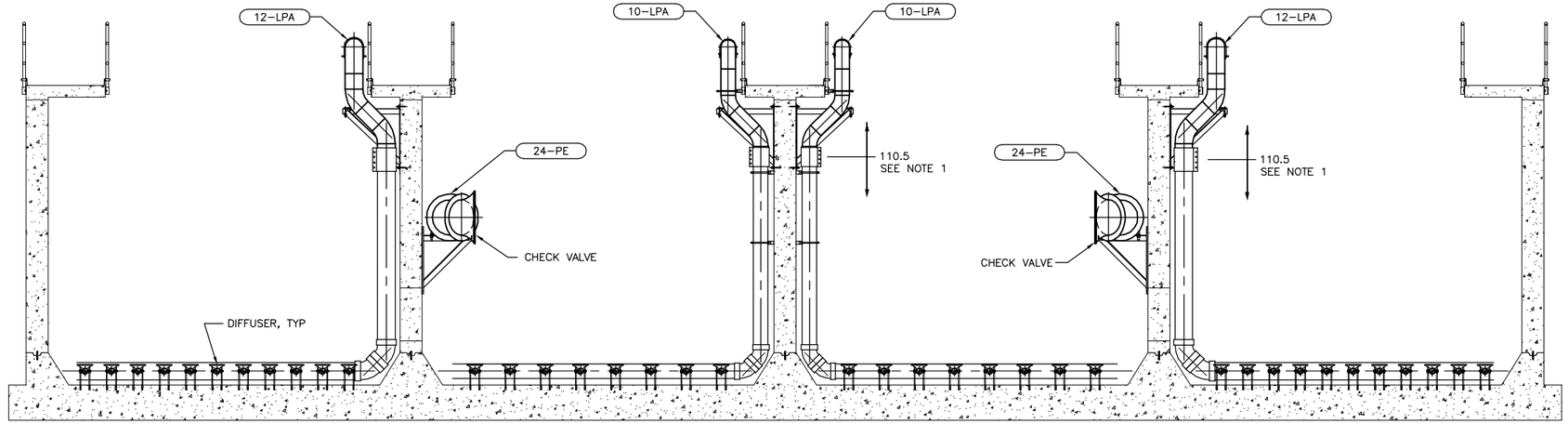

SECTION
1/4" = 1'–0"

C
31P101

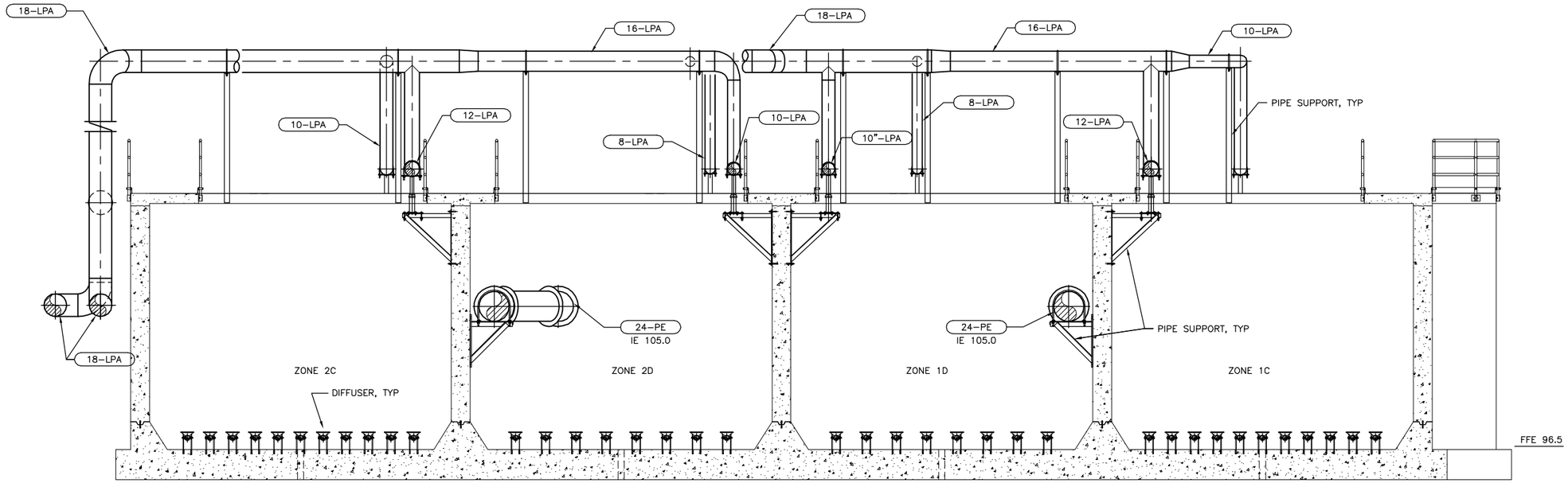

SECTION
1/4" = 1'–0"

D
31P101

NOTES:
1. ALL LPA PIPING, SUPPORTS AND ANCHORS BELOW ELEVATION 110.5 TO BE DESIGNED BY FINE BUBBLE DIFFUSER MANUFACTURER.

HDR Engineering, Inc.

ISSUE	DATE	DESCRIPTION
A	JUNE 2015	ISSUED FOR BID

PROJECT MANAGER	C. OLSON
DESIGNED	T. KONTONICKAS
DESIGNED	----
CHECKED	C. OLSON
DRAWN	B. DOWN
DATE	JUNE 30, 2015
PROJECT NUMBER	215786

REGISTERED PROFESSIONAL ENGINEER
CRAIG A. OLSON
NO. 39819
EXP. 12/31/15
CIVIL
STATE OF CALIFORNIA
06-30-15

CITY OF PINOLE CALIFORNIA 1903

PINOLE/HERCULES
WATER POLLUTION
CONTROL PLANT UPGRADE
CLIENT PN

PROCESS
EXISTING AERATION BASINS
EXPANSION SECTIONS

0 1" 2"

FILENAME	215786–31P106
SCALE	AS NOTED

SHEET
31P106

FILE: 215786–31P106.dwg
DATE: Oct 06, 2015–4:21:06pm, ranlder

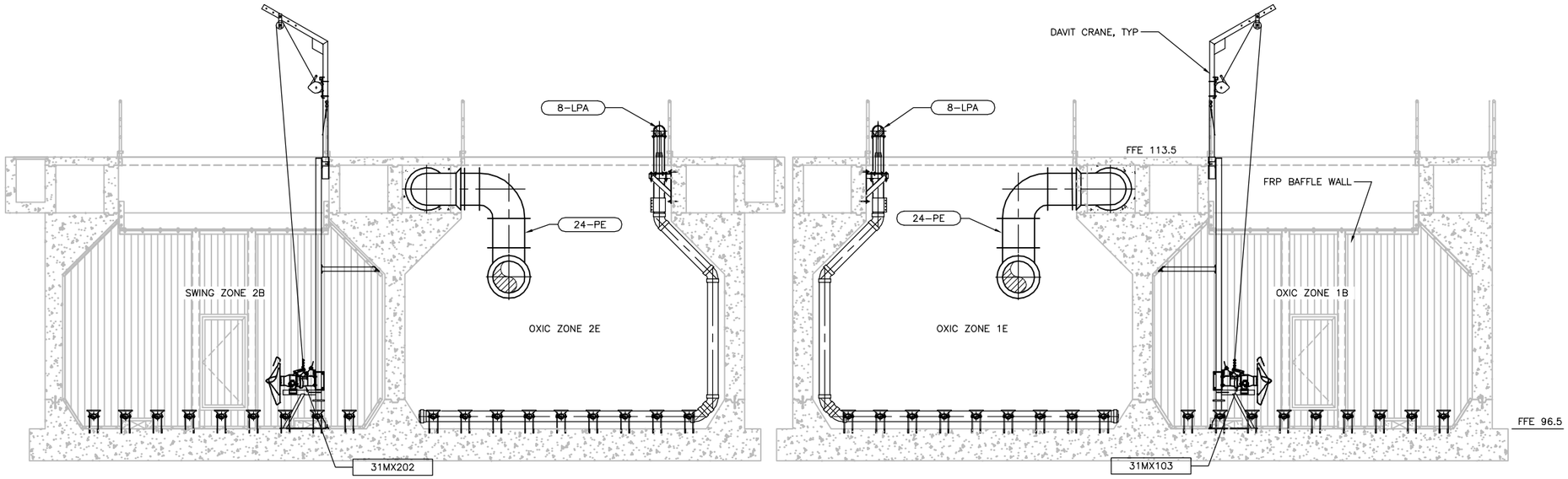

SECTION
1/4" = 1'-0"
E
31P101

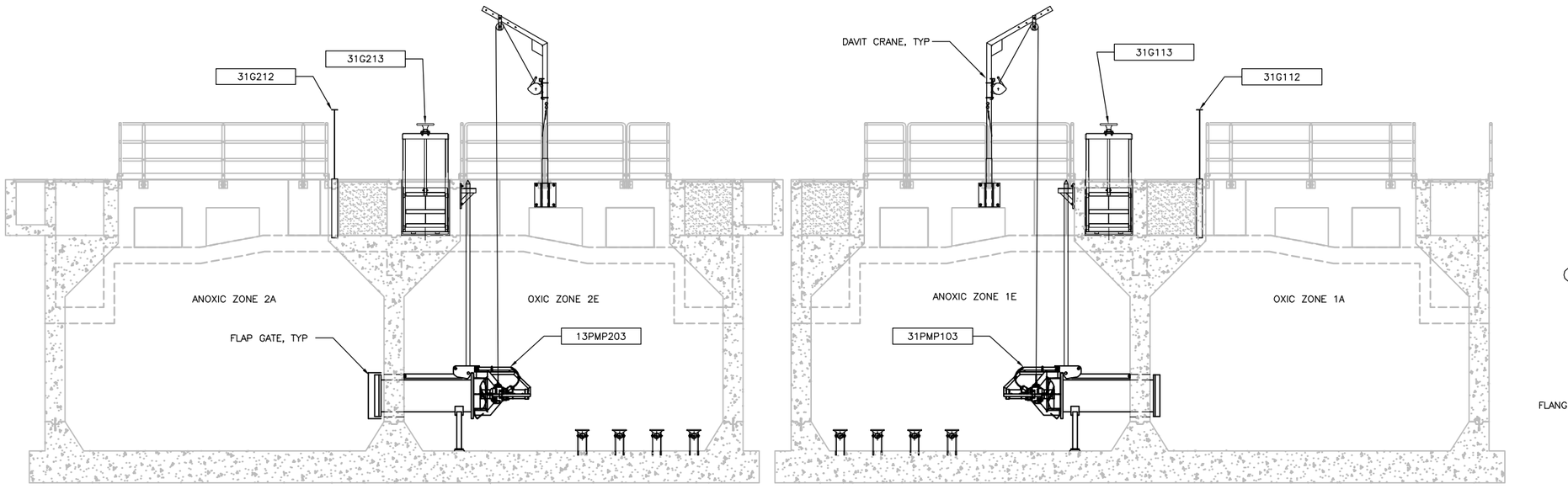

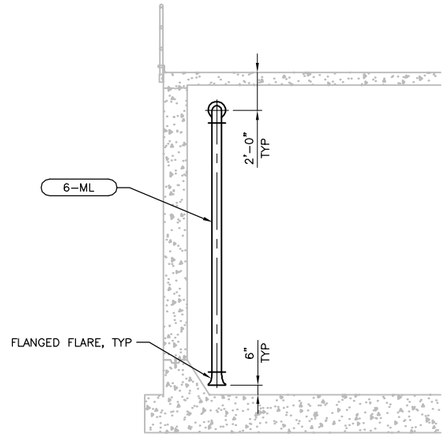

SECTION
1/4" = 1'-0"
F
31P101

FILE: 215786-31P107.dwg
DATE: Oct 06, 2015-4:21:15pm, ranider

HDR Engineering, Inc.

ISSUE	DATE	DESCRIPTION
A	JUNE 2015	ISSUED FOR BID

PROJECT MANAGER	C. OLSON
DESIGNED	T. KONTONICKAS
DESIGNED	
CHECKED	C. OLSON
DRAWN	B. DOWN
DATE	JUNE 30, 2015
PROJECT NUMBER	215786

REGISTERED PROFESSIONAL ENGINEER
CRAIG A. OLSON
NO. 39819
EXP. 12/31/15
CIVIL
STATE OF CALIFORNIA
06-30-15

CITY OF PINOLE CALIFORNIA 1903

PINOLE/HERCULES
WATER POLLUTION
CONTROL PLANT UPGRADE
CLIENT PN

PROCESS

EXISTING AERATION BASINS EXPANSION SECTIONS

0 1" 2"

FILENAME	215786-31P107
SCALE	AS NOTED

SHEET
31P107

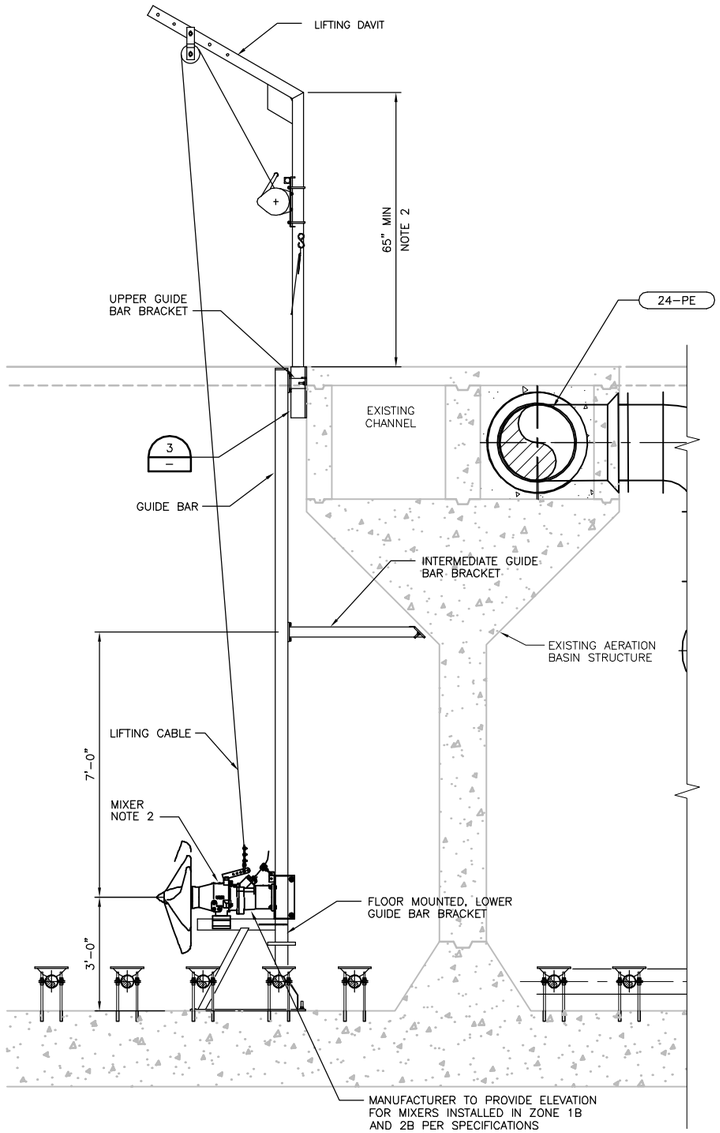

MIXER DETAIL

1/2" = 1'-0"

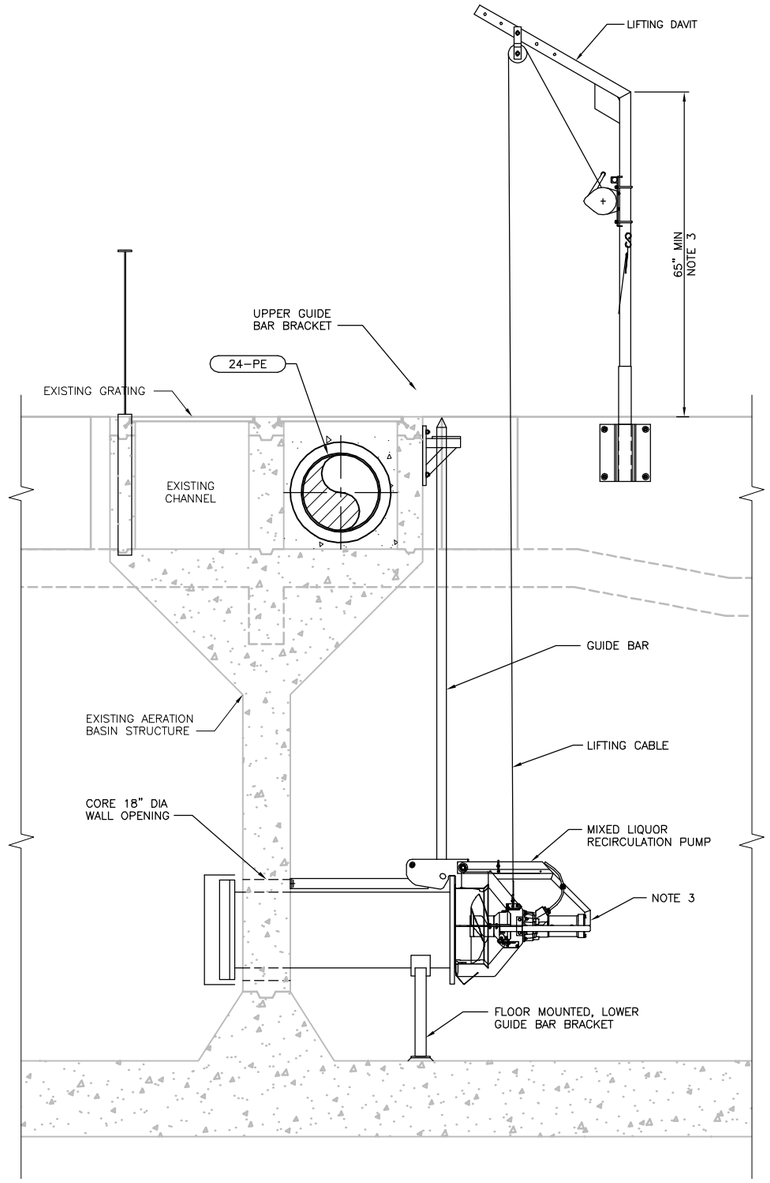

RECIRCULATION PUMP DETAIL

1/2" = 1'-0"

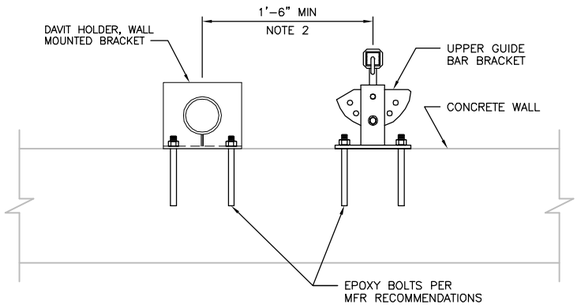

LIFTING DAVIT SOCKET DETAIL FOR MIXERS IN ANOXIC ZONES 1A, 1B, 2A AND 2C.

BRACKET DETAIL

1/2" = 1'-0"

NOTES:

1. MOUNT ALL BRACKETS PER MANUFACTURERS RECOMMENDATION.
2. DIMENSIONS TO BE DETERMINED PER FINAL MIXER SELECTION AND MANUFACTURERS RECOMMENDATION. MIXER INSTALLATION ELEVATION TO BE DETERMINED BY MANUFACTURER.
3. DIMENSIONS TO BE DETERMINED PER FINAL RECIRCULATION PUMP SELECTION AND MANUFACTURERS RECOMMENDATION.

FILE: 215786-31P108.dwg
DATE: Oct 06, 2015-4:21:25pm, ranider

HDR Engineering, Inc.

ISSUE	DATE	DESCRIPTION
A	JUNE 2015	ISSUED FOR BID

PROJECT MANAGER	C. OLSON
DESIGNED	M. RAMANATHAN
DESIGNED	
CHECKED	C. OLSON
DRAWN	B. DOWN
DATE	JUNE 30, 2015
PROJECT NUMBER	215786

REGISTERED PROFESSIONAL ENGINEER
CRAIG A. OLSON
NO. 39819
EXP. 12/31/15
CIVIL
STATE OF CALIFORNIA
06-30-15

CITY OF PINOLE CALIFORNIA 1903

PINOLE/HERCULES
WATER POLLUTION
CONTROL PLANT UPGRADE
CLIENT PN

PROCESS
EXISTING AERATION BASINS EXPANSION
SECTIONS AND DETAILS

0 1" 2"

FILENAME	215786-31P108
SCALE	AS NOTED

SHEET
31P108

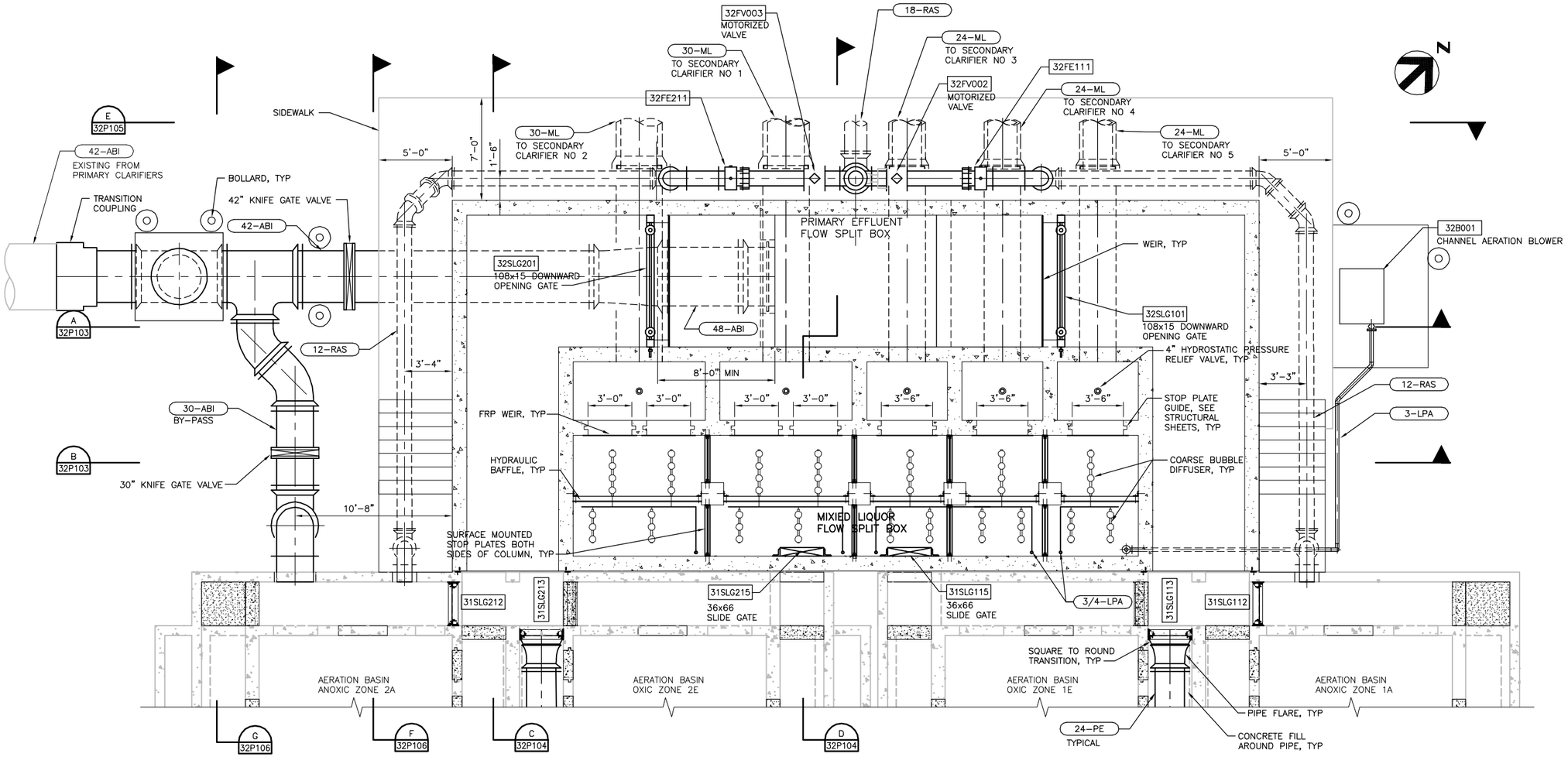

SECTIONAL PLAN AT EL 112.0

1/4" = 1'-0"

FILE: 215786-32P101.dwg
DATE: Oct 06, 2015-4:21:40pm, ranider

HDR Engineering, Inc.

ISSUE	DATE	DESCRIPTION
A	JUNE 2015	ISSUED FOR BID

PROJECT MANAGER	C. OLSON
DESIGNED	T. KONTONICKAS
DESIGNED	
CHECKED	C. OLSON
DRAWN	B.DOWN
DATE	JUNE 30, 2015
PROJECT NUMBER	215786

REGISTERED PROFESSIONAL ENGINEER
CRAIG A. OLSON
NO. 39819
EXP. 12/31/15
CIVIL
STATE OF CALIFORNIA
06-30-15

CITY OF PINOLE CALIFORNIA 1903

PINOLE/HERCULES
WATER POLLUTION
CONTROL PLANT UPGRADE
CLIENT PN

PROCESS
PRIMARY EFFLUENT AND MIXED LIQUOR FLOW SPLIT BOX
SECTIONAL PLAN AT EL 112.0

0 1" 2"

FILENAME	215786-32P101
SCALE	AS NOTED

SHEET
32P101

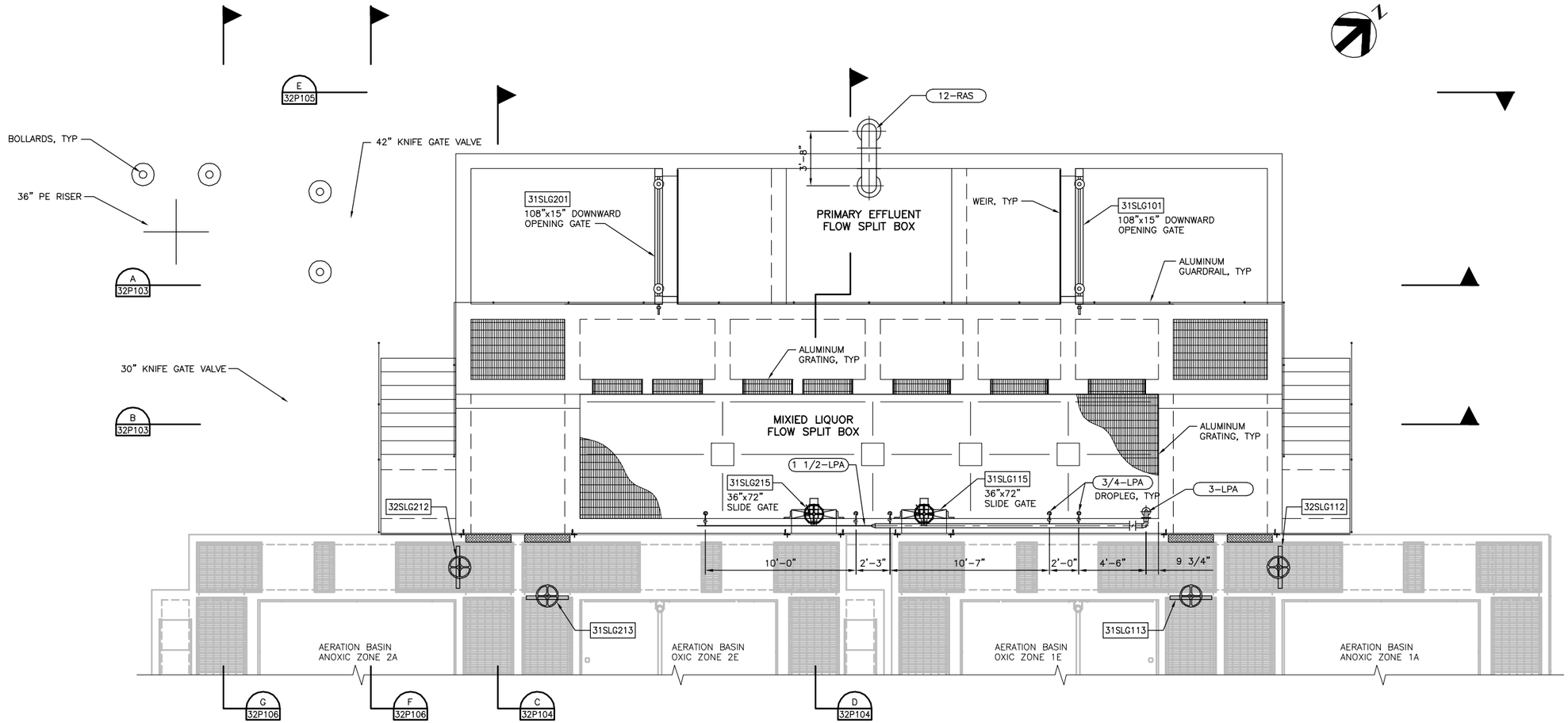

DECK PLAN

1/4" = 1'-0"

FILE: 215786-32P102.dwg
DATE: Oct 06, 2015--4:21:47pm, rsnider

HDR Engineering, Inc.

ISSUE	DATE	DESCRIPTION
A	JUNE 2015	ISSUED FOR BID

PROJECT MANAGER	C. OLSON
DESIGNED	T. KONTONICKAS
DESIGNED	----
CHECKED	C. OLSON
DRAWN	B. DOWN
DATE	JUNE 30, 2015
PROJECT NUMBER	215786

REGISTERED PROFESSIONAL ENGINEER
CRAIG A. OLSON
NO. 39819
EXP. 12/31/15
CIVIL
STATE OF CALIFORNIA
06-30-15

CITY OF PINOLE CALIFORNIA 1903

PINOLE/HERCULES
WATER POLLUTION
CONTROL PLANT UPGRADE
CLIENT PN

PROCESS
PRIMARY EFFLUENT AND MIXED LIQUOR
FLOW SPLIT BOX
DECK PLAN

0 1" 2"

FILENAME	215786-32P102
SCALE	AS NOTED

SHEET
32P102

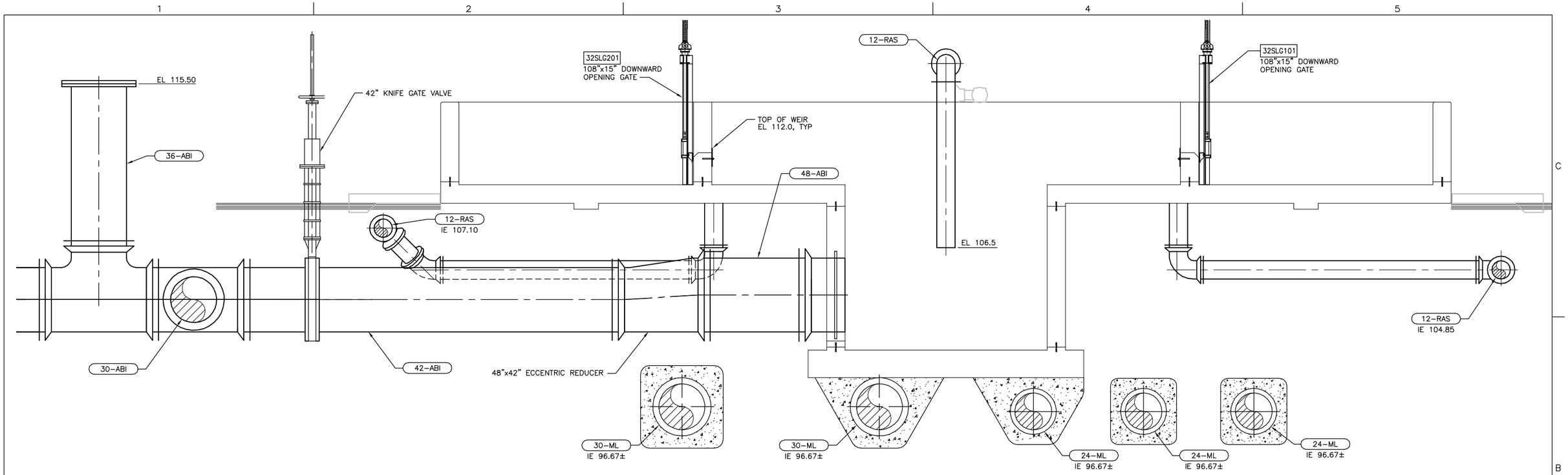

SECTION
3/8" = 1'-0"
A
32P101

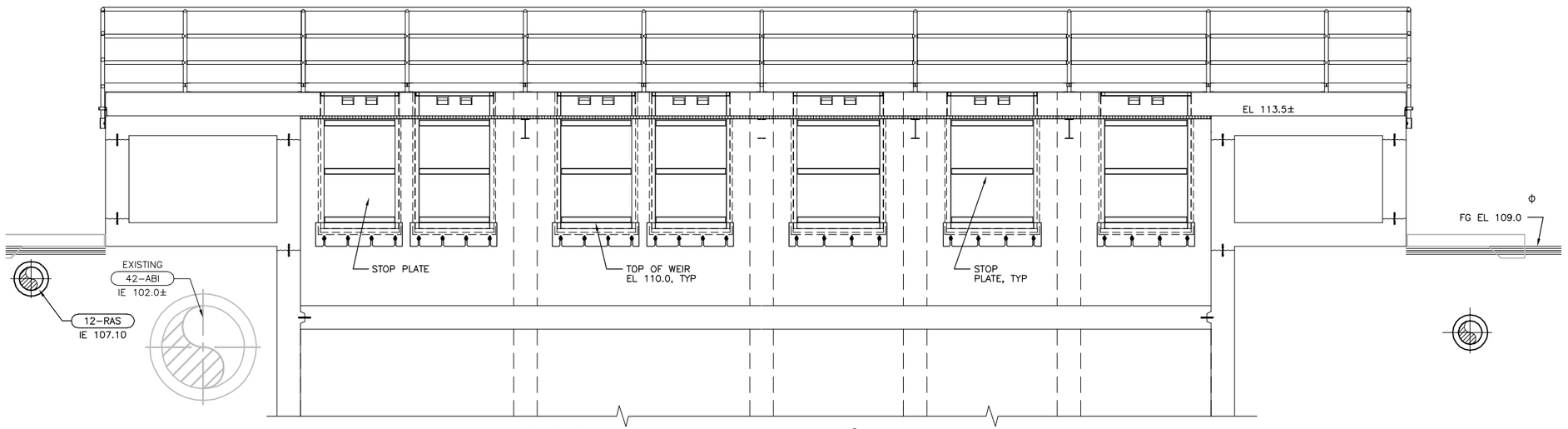

SECTION
3/8" = 1'-0"
B
32P101

FILE: 215786–32P103.dwg
DATE: Oct 06, 2015–4:21:54pm, rsnider

HDR
HDR Engineering, Inc.

ISSUE	DATE	DESCRIPTION
A	JUNE 2015	ISSUED FOR BID

PROJECT MANAGER	C. OLSON
DESIGNED	T. KONTONICKAS
DESIGNED	
CHECKED	C. OLSON
DRAWN	B. DOWN
DATE	JUNE 30, 2015
PROJECT NUMBER	215786

REGISTERED PROFESSIONAL ENGINEER
CRAIG A. OLSON
NO. 39819
EXP. 12/31/15
CIVIL
STATE OF CALIFORNIA
06-30-15

CITY OF PINOLE CALIFORNIA 1903

PINOLE/HERCULES
WATER POLLUTION
CONTROL PLANT UPGRADE
CLIENT PN

PROCESS
PRIMARY EFFLUENT AND MIXED LIQUOR
FLOW SPLIT BOX SECTIONS

0 1" 2"

FILENAME	215786–32P103
SCALE	AS NOTED

SHEET
32P103

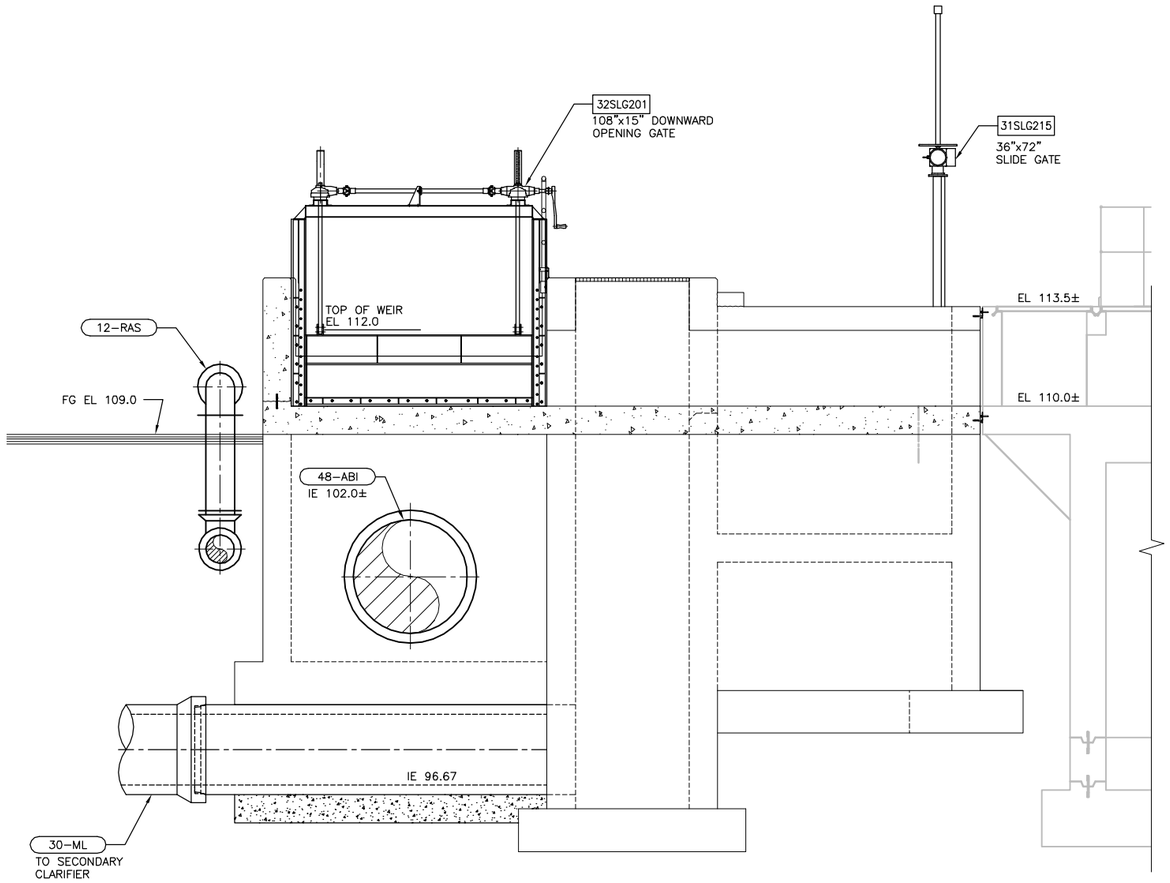

SECTION
3/8" = 1'-0"
C 32P101

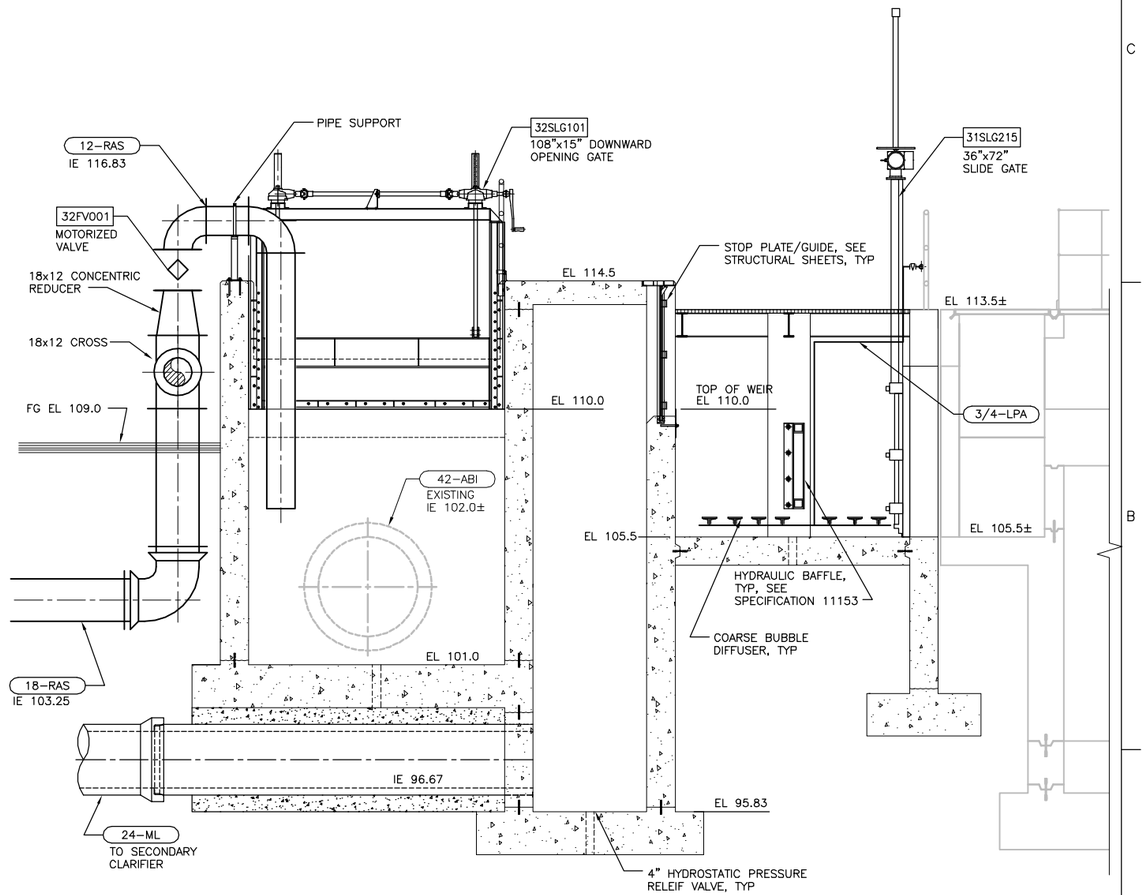

SECTION
3/8" = 1'-0"
D 32P101

FILE: 215786-32P104.dwg
DATE: Oct 06, 2015-4:22:01pm, ranider

HDR Engineering, Inc.

ISSUE	DATE	DESCRIPTION
A	JUNE 2015	ISSUED FOR BID

PROJECT MANAGER	C. OLSON
DESIGNED	T. KONTONICKAS
DESIGNED	
CHECKED	C. OLSON
DRAWN	B. DOWN
DATE	JUNE 30, 2015
PROJECT NUMBER	215786

REGISTERED PROFESSIONAL ENGINEER CRAIG A. OLSON NO. 39819 EXP. 12/31/15 CIVIL STATE OF CALIFORNIA 06-30-15

CITY OF PINOLE CALIFORNIA 1903

PINOLE/HERCULES
WATER POLLUTION
CONTROL PLANT UPGRADE
CLIENT PN

PROCESS
PRIMARY EFFLUENT AND MIXED LIQUOR FLOW SPLIT BOX SECTIONS

0 1" 2"

FILENAME	215786-32P104
SCALE	AS NOTED

SHEET
32P104

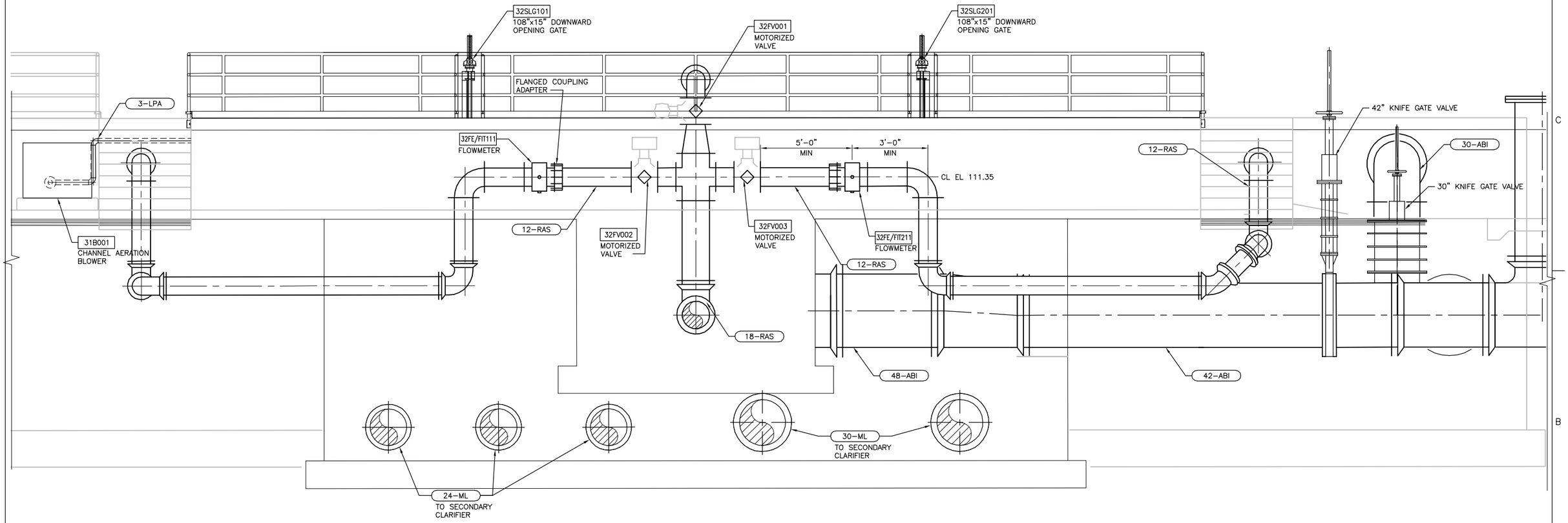

SECTION
3/8" = 1'-0"

E
32P101

FILE: 215786-32P105.dwg
DATE: Oct 06, 2015-4:22:08pm, rsnider

HDR Engineering, Inc.

ISSUE	DATE	DESCRIPTION
A	JUNE 2015	ISSUED FOR BID

PROJECT MANAGER	C. OLSON
DESIGNED	T. KONTONICKAS
DESIGNED	
CHECKED	C. OLSON
DRAWN	R. SNIDER
DATE	JUNE 30, 2015
PROJECT NUMBER	215786

REGISTERED PROFESSIONAL ENGINEER
CRAIG A. OLSON
NO. 39819
EXP. 12/31/15
CIVIL
STATE OF CALIFORNIA
06-30-15

CITY OF PINOLE CALIFORNIA 1903

PINOLE/HERCULES
WATER POLLUTION
CONTROL PLANT UPGRADE
CLIENT PN

PROCESS
PRIMARY EFFLUENT AND MIXED LIQUOR
FLOW SPLIT BOX
SECTIONS

0 1" 2"

FILENAME	215786-32P105
SCALE	AS NOTED

SHEET
32P105

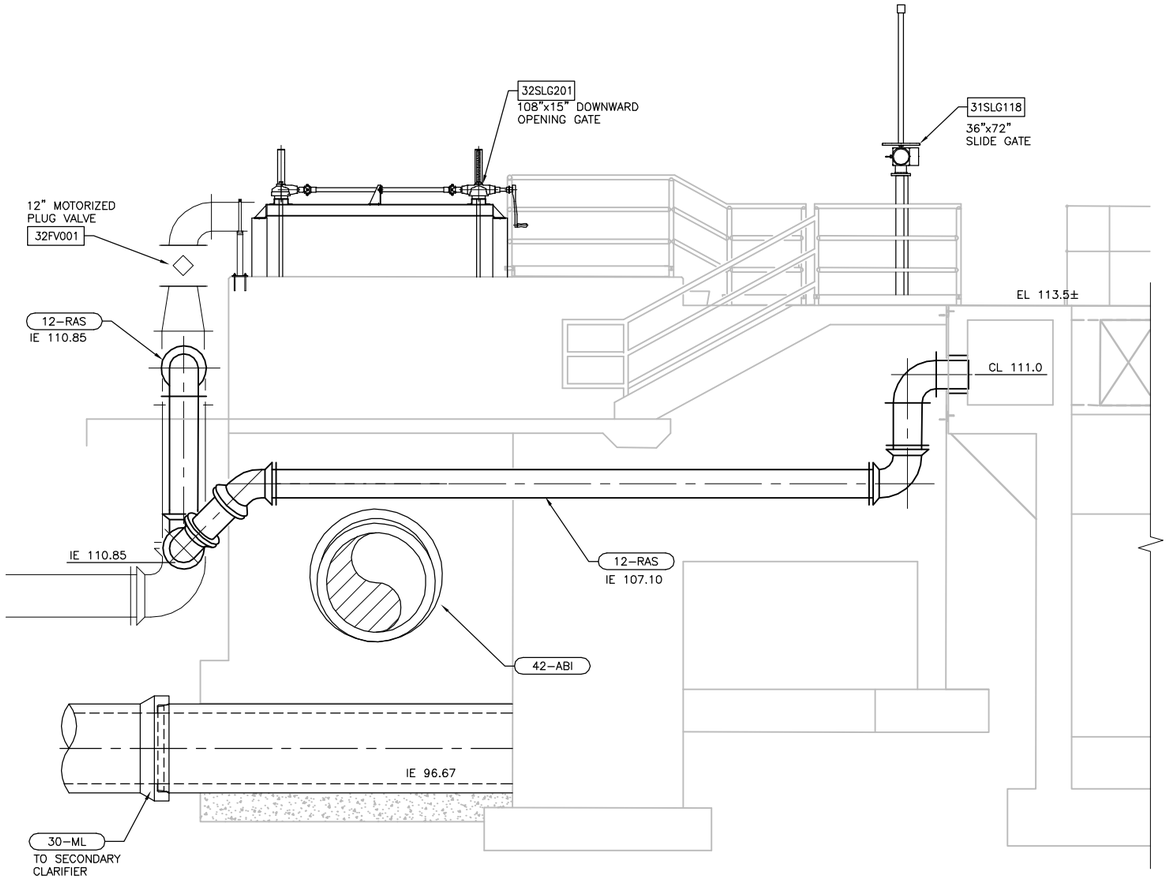

SECTION
3/8" = 1'–0"
F 32P101

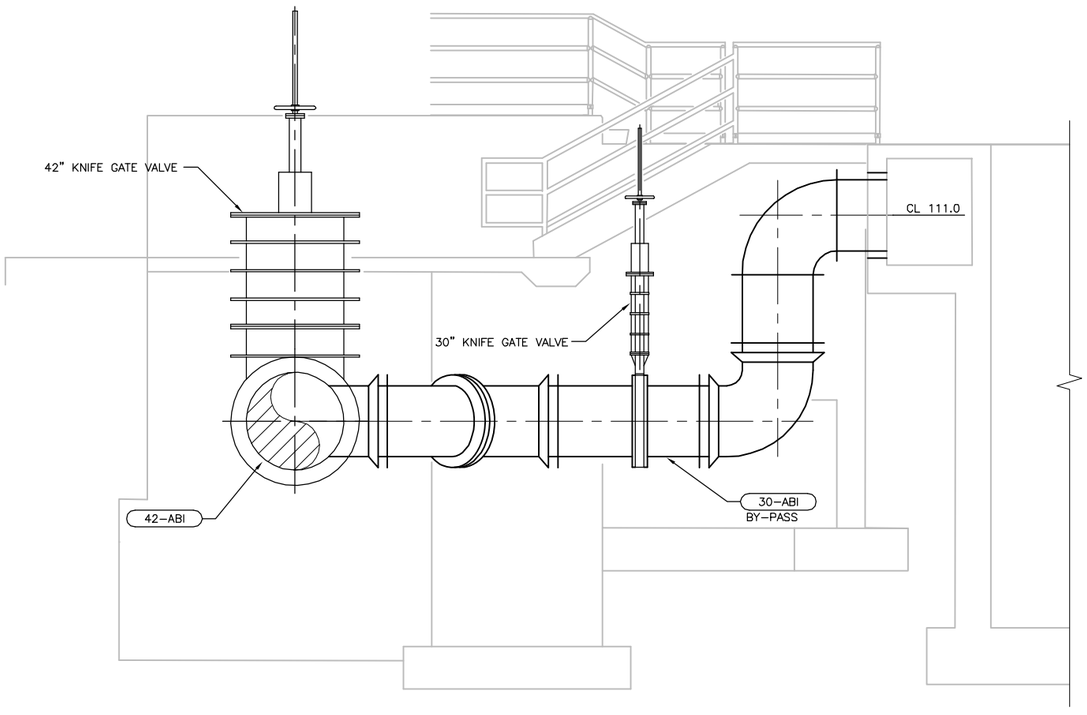

SECTION
3/8" = 1'–0"
G 32P101

FILE: 215786–32P106.dwg
DATE: Oct 06, 2015–4:22:14pm, rsnider

HDR
HDR Engineering, Inc.

ISSUE	DATE	DESCRIPTION
A	JUNE 2015	ISSUED FOR BID

PROJECT MANAGER	C. OLSON
DESIGNED	T. KONTONICKAS
DESIGNED	
CHECKED	C. OLSON
DRAWN	R. SNIDER
DATE	JUNE 30, 2015
PROJECT NUMBER	215786

REGISTERED PROFESSIONAL ENGINEER
CRAIG A. OLSON
NO. 39819
EXP. 12/31/15
CIVIL
STATE OF CALIFORNIA
06-30-15

CITY OF PINOLE CALIFORNIA 1903

PINOLE/HERCULES
WATER POLLUTION
CONTROL PLANT UPGRADE
CLIENT PN

PROCESS
PRIMARY EFFLUENT AND MIXED LIQUOR
FLOW SPLIT BOX
SECTIONS

0 1" 2"

FILENAME	215786–32P106
SCALE	AS NOTED

SHEET
32P106

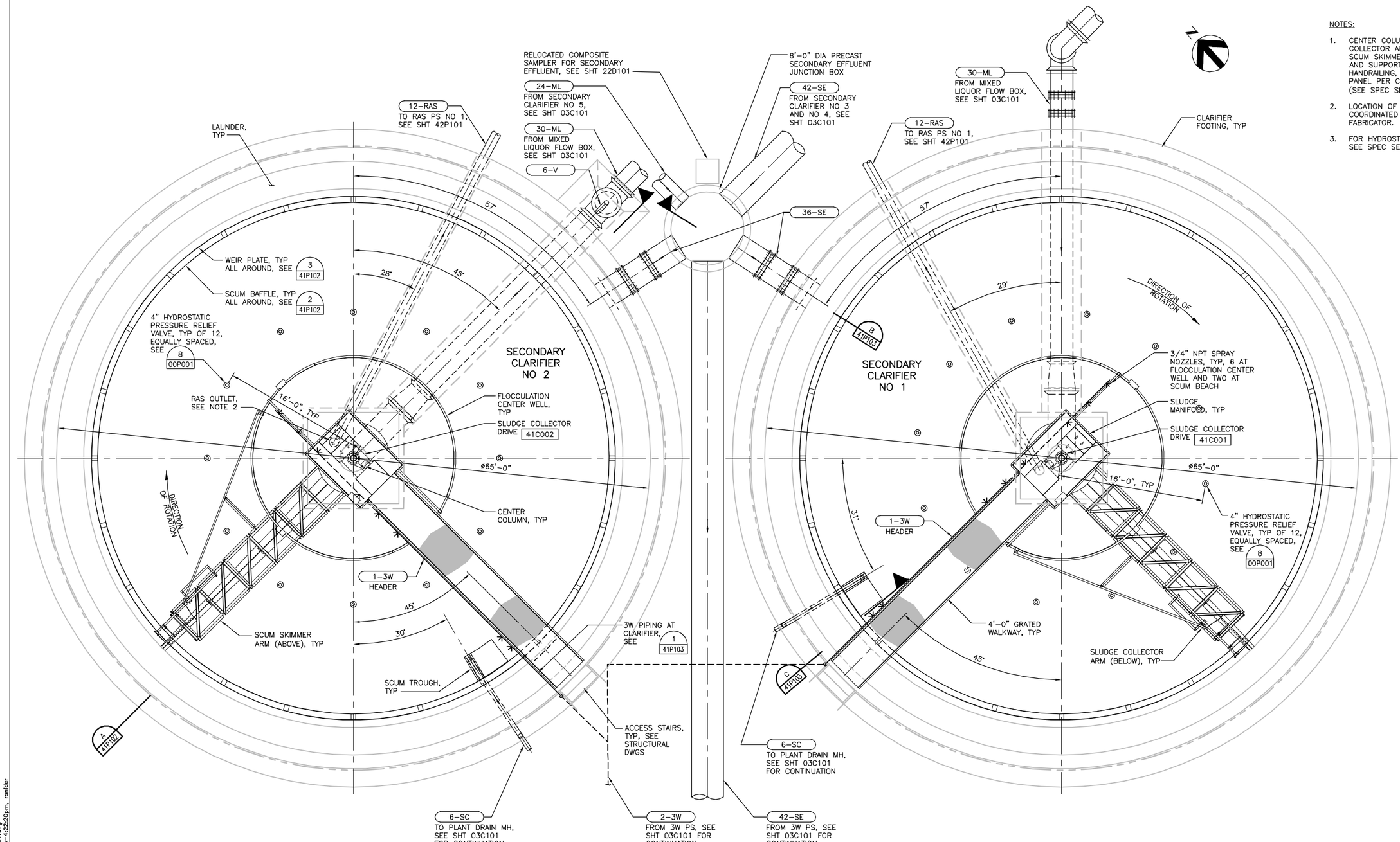

PLAN
3/16" = 1'–0"

NOTES:

1. CENTER COLUMN, SUPPORT CAGE, SLUDGE COLLECTOR AND SUPPORT, SLUDGE MANIFOLD, SCUM SKIMMER AND SUPPORT, SCUM BEACH AND SUPPORT, WALKWAY, PLATFORM, HANDRAILING, DRIVE MECHANISM, AND CONTROL PANEL PER CLARIFIER MECHANISM FABRICATOR (SEE SPEC SECTION 11125).
2. LOCATION OF 12–RAS OUTLET TO BE COORDINATED WITH CLARIFIER MECHANISM FABRICATOR.
3. FOR HYDROSTATIC PRESSURE RELIEF VALVES, SEE SPEC SECTION 15152.

FILE: 215786–41P101.dwg
DATE: Oct 06, 2015–4:22:20pm, ranider

HDR Engineering, Inc.

ISSUE	DATE	DESCRIPTION
A	JUNE 2015	ISSUED FOR BID

PROJECT MANAGER	C. OLSON
DESIGNED	T. KONTONICKAS
DESIGNED	
CHECKED	C. OLSON
DRAWN	M. FOYLE
DATE	JUNE 30, 2015
PROJECT NUMBER	215786

REGISTERED PROFESSIONAL ENGINEER THEODORE H. KONTONICKAS NO. 29378 EXP. 06/30/17 MECHANICAL STATE OF CALIFORNIA

CITY OF PINOLE CALIFORNIA 1903

PINOLE/HERCULES
WATER POLLUTION
CONTROL PLANT UPGRADE
CLIENT PN

PROCESS

SECONDARY CLARIFIERS NO 1 AND NO 2 PLAN

0 1" 2"

FILENAME	215786–41P101
SCALE	AS NOTED

SHEET **41P101**

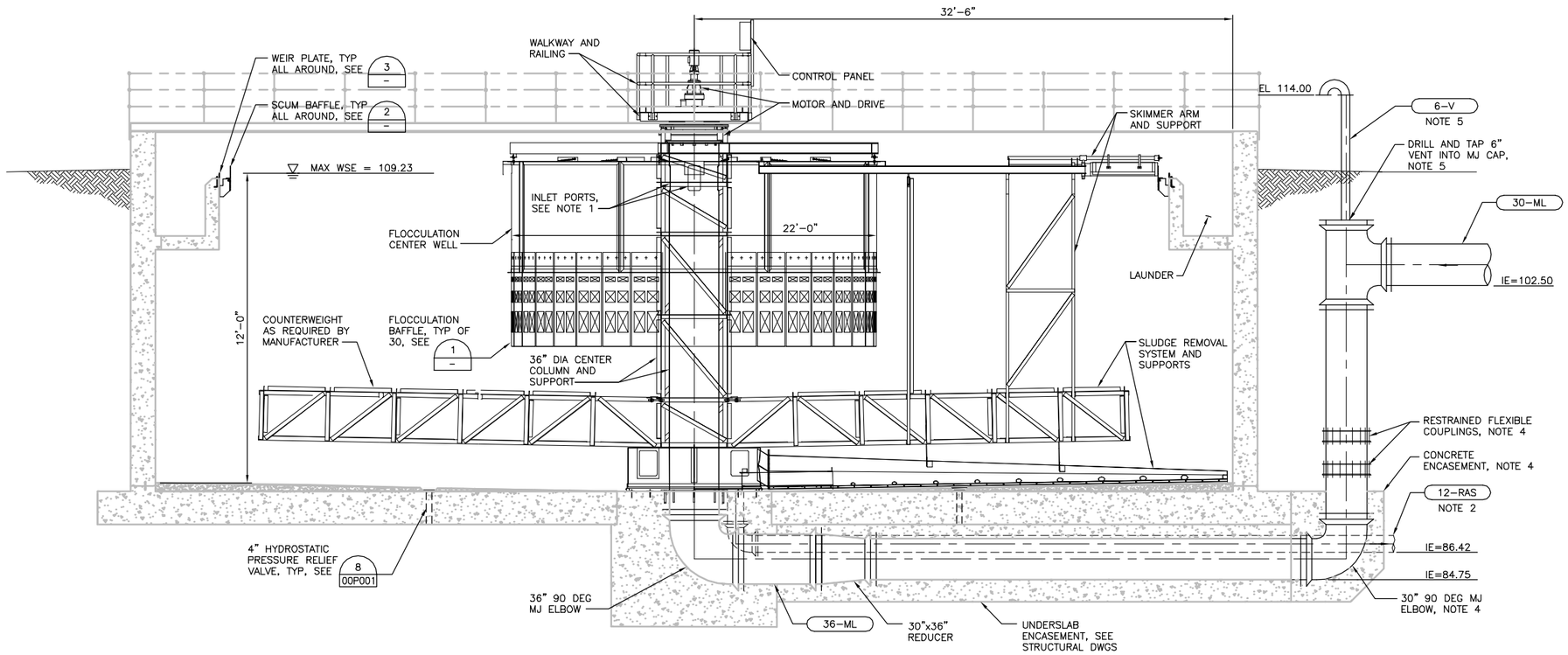

SECTION
1/4" = 1'-0"
A 41P101

NOTES:

1. CENTER COLUMN, SUPPORT CAGE, SLUDGE COLLECTOR AND SUPPORT, SLUDGE MANIFOLD, SCUM SKIMMER AND SUPPORT, SCUM BEACH AND SUPPORT, WALKWAY, PLATFORM, HANDRAILING, DRIVE MECHANISM, AND CONTROL PANEL PER CLARIFIER MECHANISM FABRICATOR (SEE SPEC SECTION 11125).
2. PIPING ROTATED FROM TRUE POSITION, SEE PLAN FOR ORIENTATION.
3. SEE SPEC SECTION 11150 FOR FLOCCULATION BAFFLES, WEIR PLATES AND SCUM BAFFLES.
4. INFLUENT PIPING ARRANGEMENT IS SHOWN FOR CLARIFIER NO. 2. FOR CLARIFIER NO. 1, ENCASEMENT ENDS AT FOOTING AND FLEXIBLE COUPLINGS ARE IN THE HORIZONTAL ARRANGEMENT PER PLAN ON SHEET 41P101.
5. PROVIDE 6" VENT ON TEE AT CLARIFIER NO. 2 ONLY.

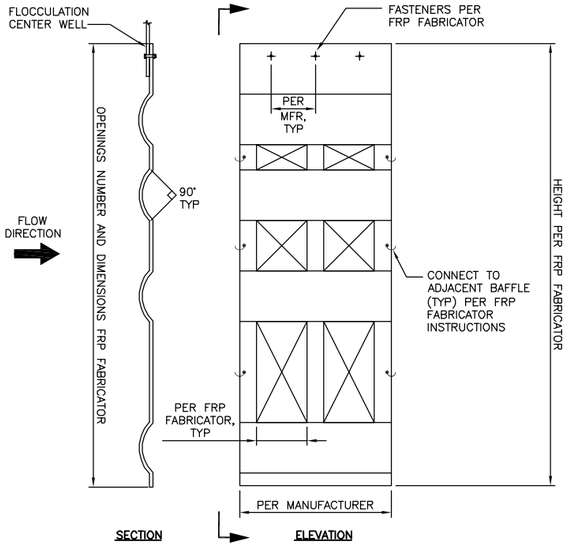

FLOCCULATION BAFFLE DETAIL 1
1" = 1'-0" SEE NOTE 3

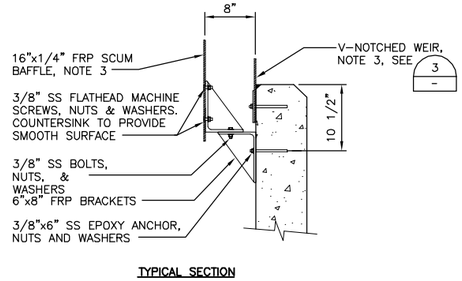

SCUM BAFFLE DETAIL 2
1" = 1'-0"

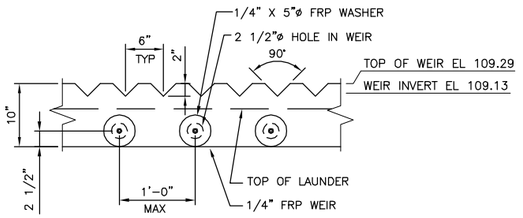

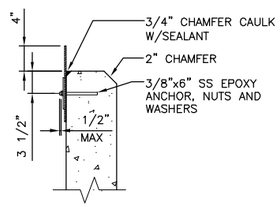

V-NOTCH WEIR DETAIL 3
1" = 1'-0" SEE NOTE 3

FILE: 215786-41P102.dwg
DATE: Oct 06, 2015-4:22:26pm, rsnider

HDR Engineering, Inc.

ISSUE	DATE	DESCRIPTION
A	JUNE 2015	ISSUED FOR BID

PROJECT MANAGER	C. OLSON
DESIGNED	T. KONTONICKAS
DESIGNED	
CHECKED	C. OLSON
DRAWN	M. FOYLE
DATE	JUNE 30, 2015
PROJECT NUMBER	215786

REGISTERED PROFESSIONAL ENGINEER THEODORE H. KONTONICKAS NO. 29378 EXP. 06/30/17 MECHANICAL STATE OF CALIFORNIA 06-30-15

CITY OF PINOLE CALIFORNIA 1903

PINOLE/HERCULES WATER POLLUTION CONTROL PLANT UPGRADE CLIENT PN

PROCESS

SECONDARY CLARIFIERS NO 1 AND NO 2 SECTION AND DETAILS

0 1" 2"

FILENAME	215786-41P102
SCALE	AS NOTED

SHEET **41P102**

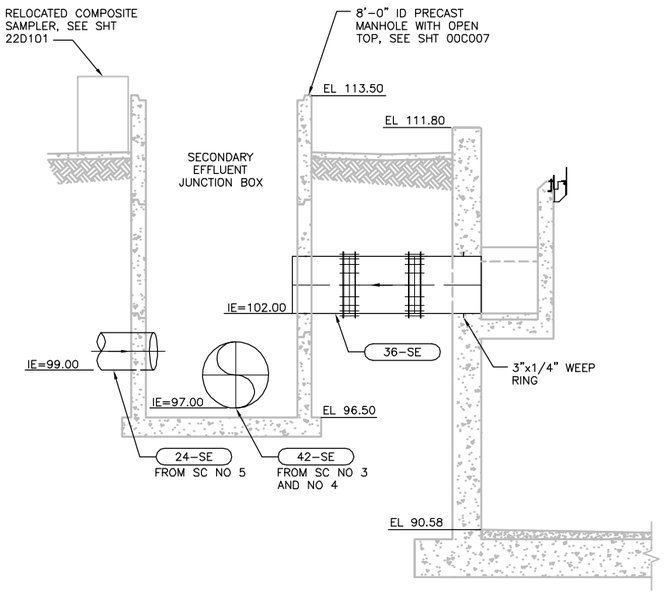

SECTION
1/4" = 1'-0"
B 41P101

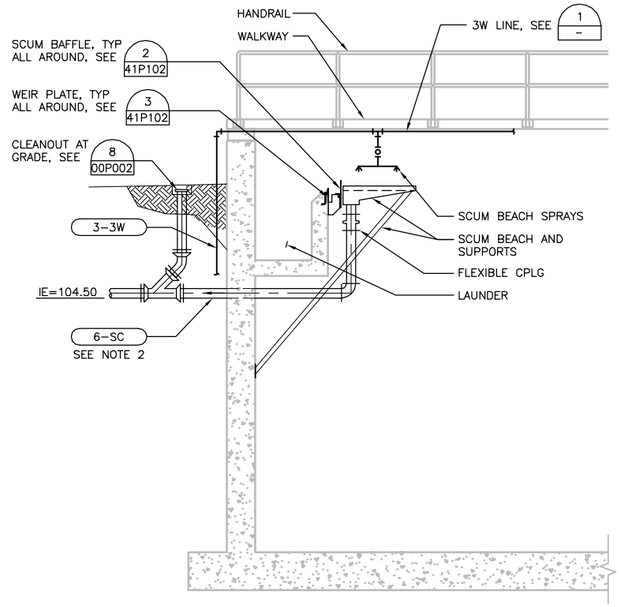

SECTION
1/4" = 1'-0"
C 41P101

NOTES:

1. SCUM BEACH AND SUPPORTS, WALKWAYS, AND RAILINGS PER CLARIFIER MECHANISM FABRICATOR (SEE SPEC SECTION 11125).

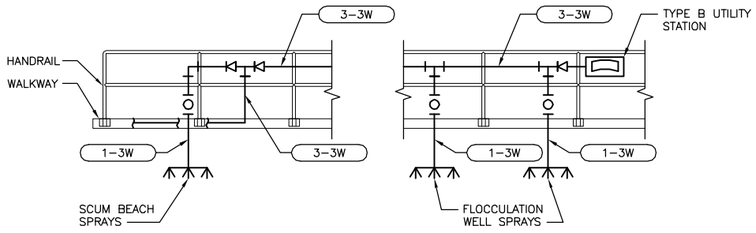

NOTES:
1. MOUNT ALL VALVES FOR EASY ACCESS FROM WALWAY BRIDGE OR CENTER PLATFORM.

3W PIPING SCHEMATIC DETAIL
NOT TO SCALE
1 41P101

FILE: 215786-41P103.dwg
DATE: Oct 06, 2015-4:22:32pm, rsnider

HDR Engineering, Inc.

ISSUE	DATE	DESCRIPTION
A	JUNE 2015	ISSUED FOR BID

PROJECT MANAGER	C. OLSON
DESIGNED	T. KONTONICKAS
DESIGNED	
CHECKED	C. OLSON
DRAWN	M. FOYLE
DATE	JUNE 30, 2015
PROJECT NUMBER	215786

REGISTERED PROFESSIONAL ENGINEER
THEODORE H. KONTONICKAS
NO. 29378
EXP. 06/30/17
MECHANICAL
STATE OF CALIFORNIA
06-30-15

CITY OF PINOLE CALIFORNIA 1903

PINOLE/HERCULES
WATER POLLUTION
CONTROL PLANT UPGRADE
CLIENT PN

PROCESS

SECONDARY CLARIFIERS NO 1 AND NO 2 SECTIONS AND DETAIL

0 1" 2"

FILENAME	215786-41P103
SCALE	AS NOTED

SHEET 41P103

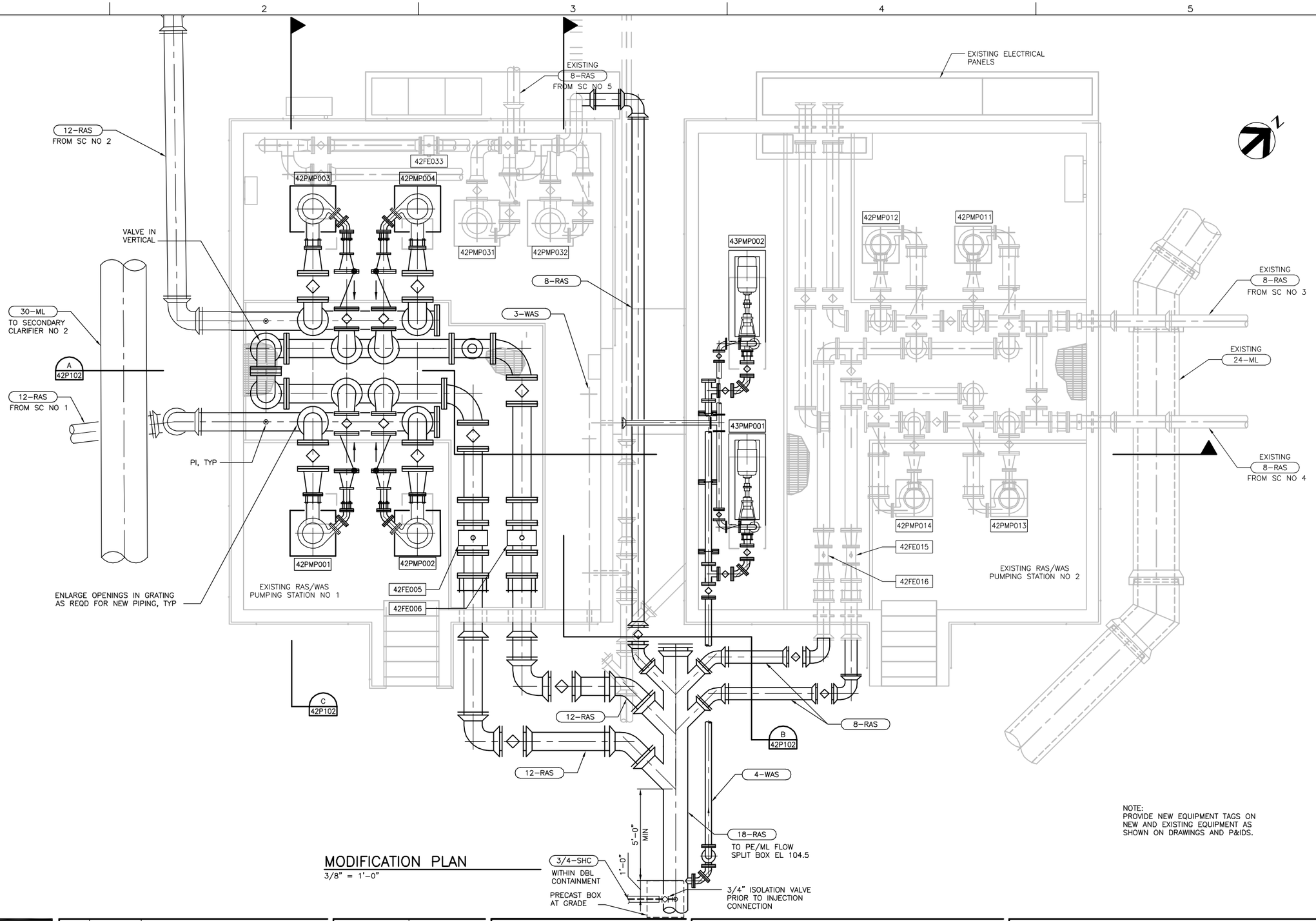

MODIFICATION PLAN

3/8" = 1'–0"

NOTE:
PROVIDE NEW EQUIPMENT TAGS ON NEW AND EXISTING EQUIPMENT AS SHOWN ON DRAWINGS AND P&IDS.

FILE: 215786–42P101.dwg
DATE: Oct 06, 2015–4:22:37pm, rsnider

HDR Engineering, Inc.

ISSUE	DATE	DESCRIPTION
A	JUNE 2015	ISSUED FOR BID

PROJECT MANAGER	C. OLSON
DESIGNED	M. RAMANATHAN
DESIGNED	
CHECKED	C. OLSON
DRAWN	B. DOWN
DATE	JUNE 30, 2015
PROJECT NUMBER	215786

REGISTERED PROFESSIONAL ENGINEER THEODORE H. KONTOVERAS NO. 29378 EXP. 06/30/17 MECHANICAL STATE OF CALIFORNIA

PINOLE/HERCULES WATER POLLUTION CONTROL PLANT UPGRADE CLIENT PN

PROCESS
EXISTING RAS/WAS PUMPING STATIONS MODIFICATION PLAN

0 1" 2"

FILENAME	215786–42P101
SCALE	AS NOTED

SHEET **42P101**

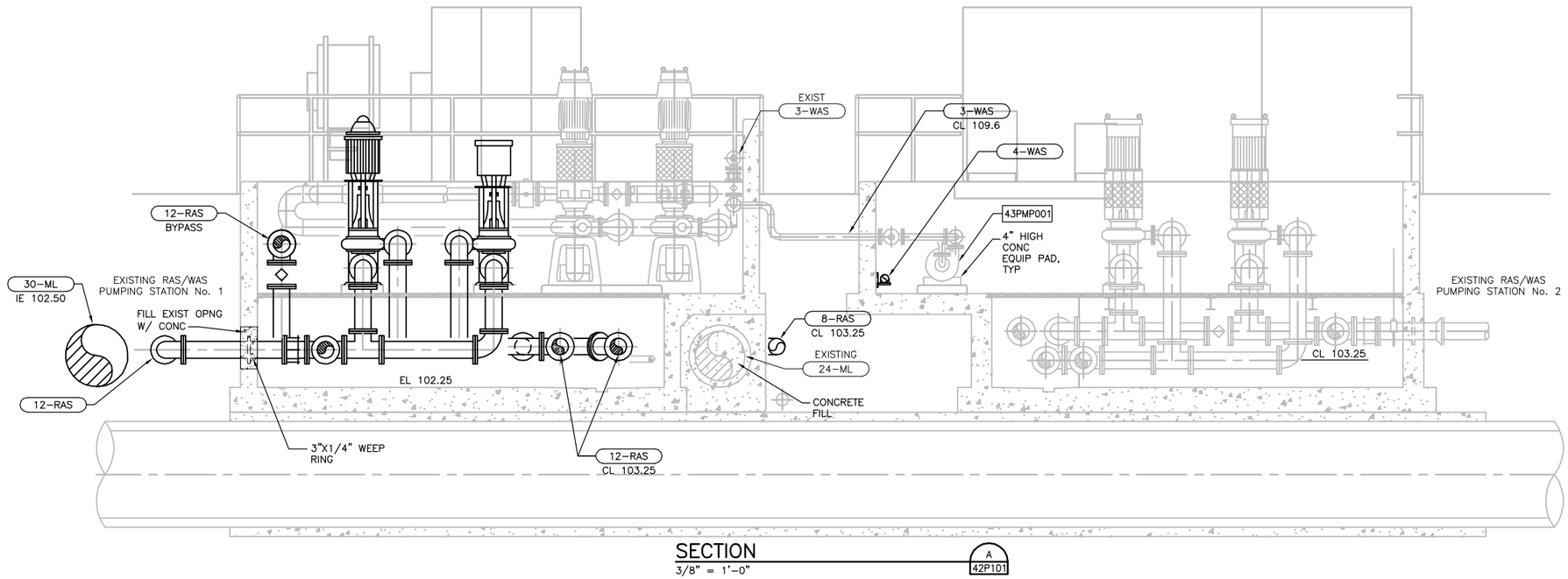

SECTION
3/8" = 1'-0"
A 42P101

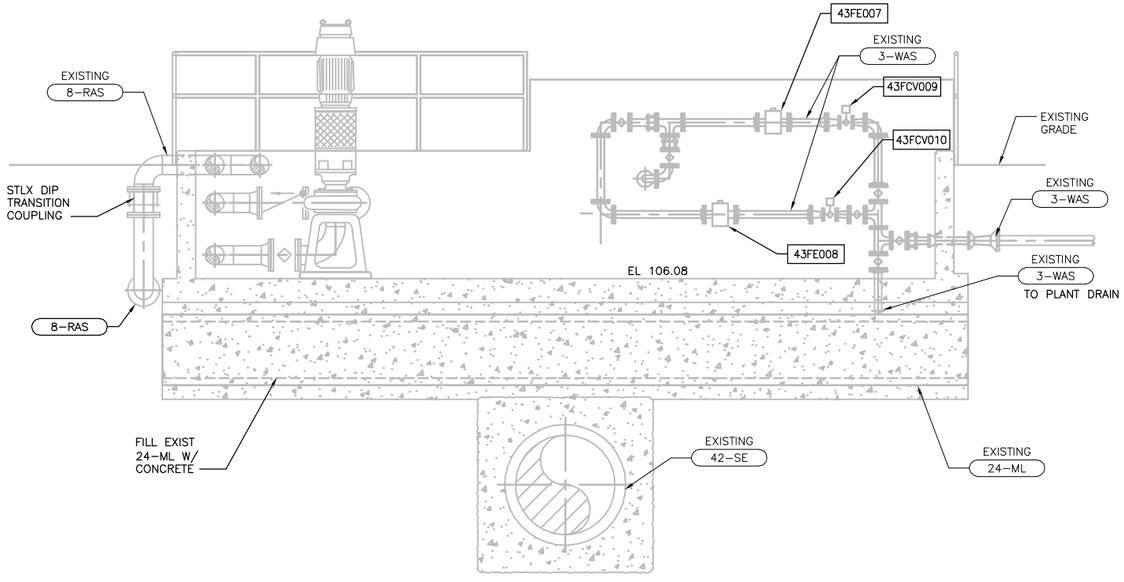

SECTION
3/8" = 1'-0"
B 42P101

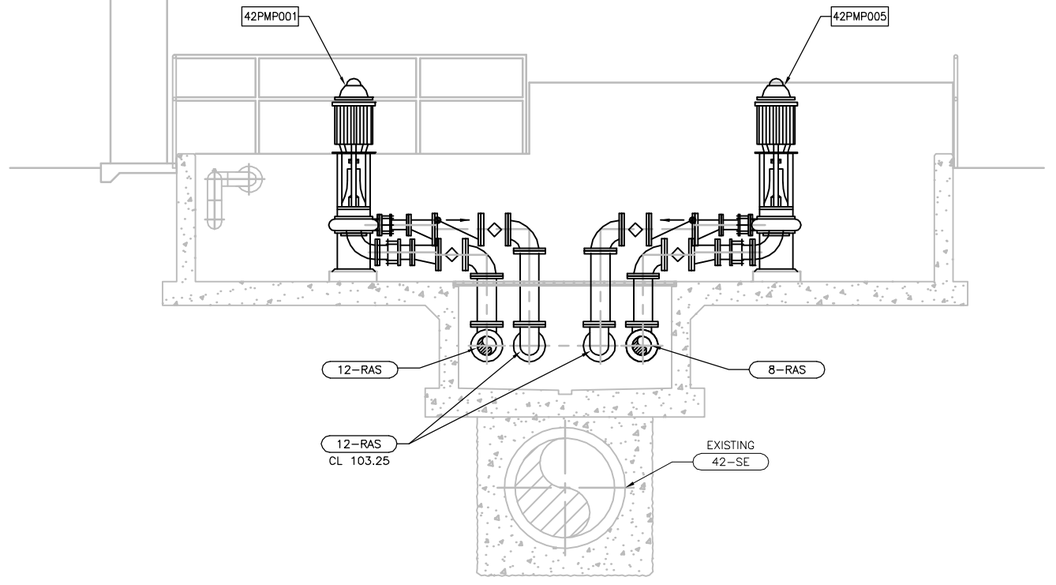

SECTION
3/8" = 1'-0"
C 42P101

FILE: 215786-42P102.dwg
DATE: Oct 06, 2015-4:22:42pm, ranider

HDR Engineering, Inc.

ISSUE	DATE	DESCRIPTION
A	JUNE 2015	ISSUED FOR BID

PROJECT MANAGER	C. OLSON
DESIGNED	T. KONTONICKAS
DESIGNED	
CHECKED	C. OLSON
DRAWN	B. DOWN
DATE	JUNE 30, 2015
PROJECT NUMBER	215786

REGISTERED PROFESSIONAL ENGINEER
THEODORE H. KONTONICKAS
NO. 29378
EXP. 06/30/17
MECHANICAL
STATE OF CALIFORNIA
06-30-15

CITY OF PINOLE CALIFORNIA 1903

PINOLE/HERCULES
WATER POLLUTION
CONTROL PLANT UPGRADE
CLIENT PN

PROCESS
EXISTING RAS/WAS PUMPING STATIONS
MODIFICATIONS SECTIONS

0 1" 2"

FILENAME	215786-42P102
SCALE	AS NOTED

SHEET
42P102

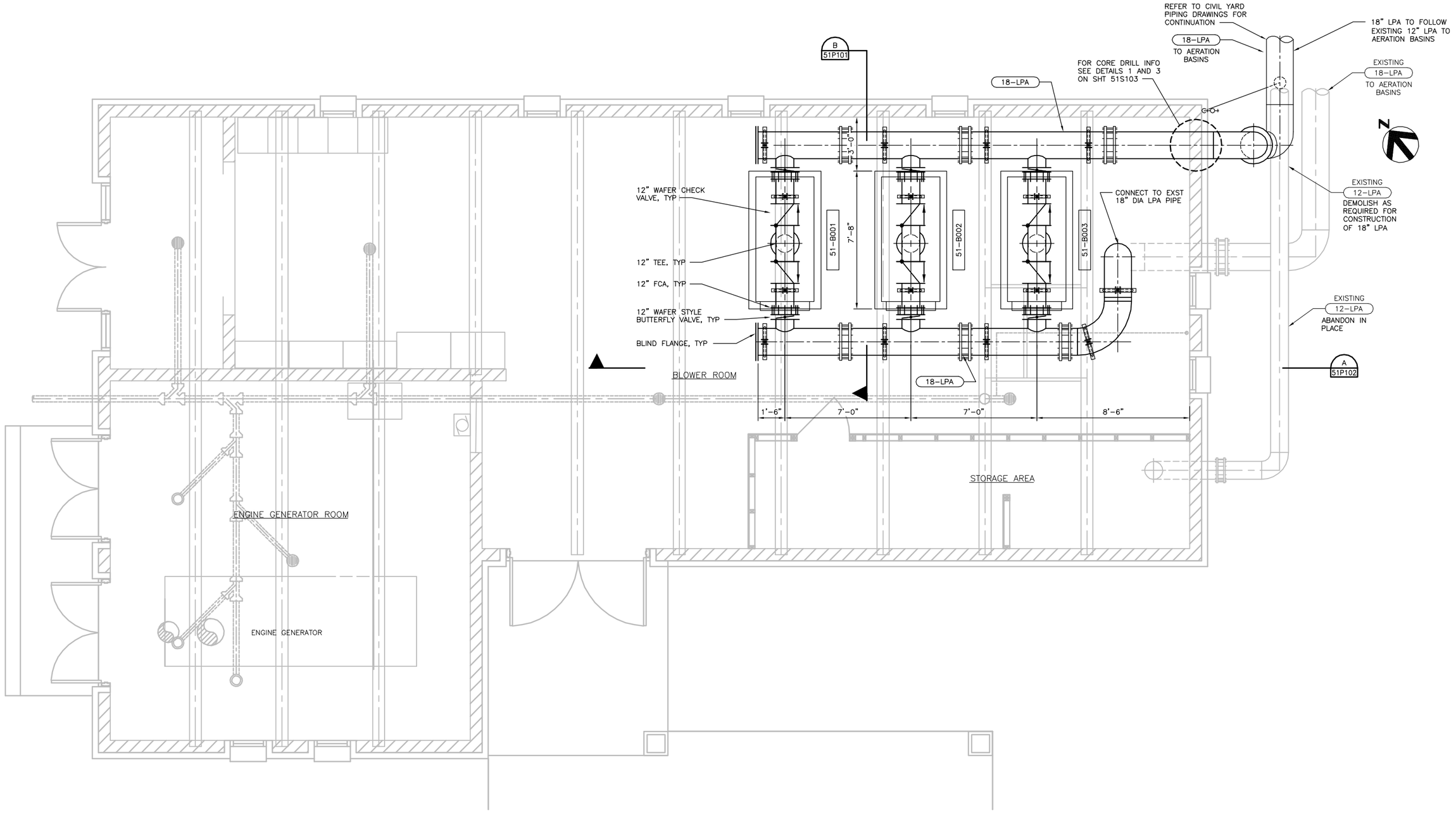

EXISTING BLOWER BUILDING PLAN

3/8" = 1'-0"

FILE: 215786-51P101.dwg
DATE: Oct 06, 2015-4:22:48pm, rsnider

HDR Engineering, Inc.

ISSUE	DATE	DESCRIPTION
A	JUNE 2015	ISSUED FOR BID

PROJECT MANAGER	C. OLSON
DESIGNED	T. KONTONICKAS
DESIGNED	
CHECKED	C. OLSON
DRAWN	B.DOWN
DATE	JUNE 30, 2015
PROJECT NUMBER	215786

REGISTERED PROFESSIONAL ENGINEER
THEODORE H. KONTONICKAS
NO. 29378
EXP. 06/30/17
MECHANICAL
STATE OF CALIFORNIA
06-30-15

CITY OF PINOLE CALIFORNIA 1903

PINOLE/HERCULES
WATER POLLUTION
CONTROL PLANT UPGRADE
CLIENT PN

PROCESS
EXISTING BLOWER BUILDING MODIFICATIONS PLAN

0 1" 2"

FILENAME	215786-51P101
SCALE	AS NOTED

SHEET
51P101

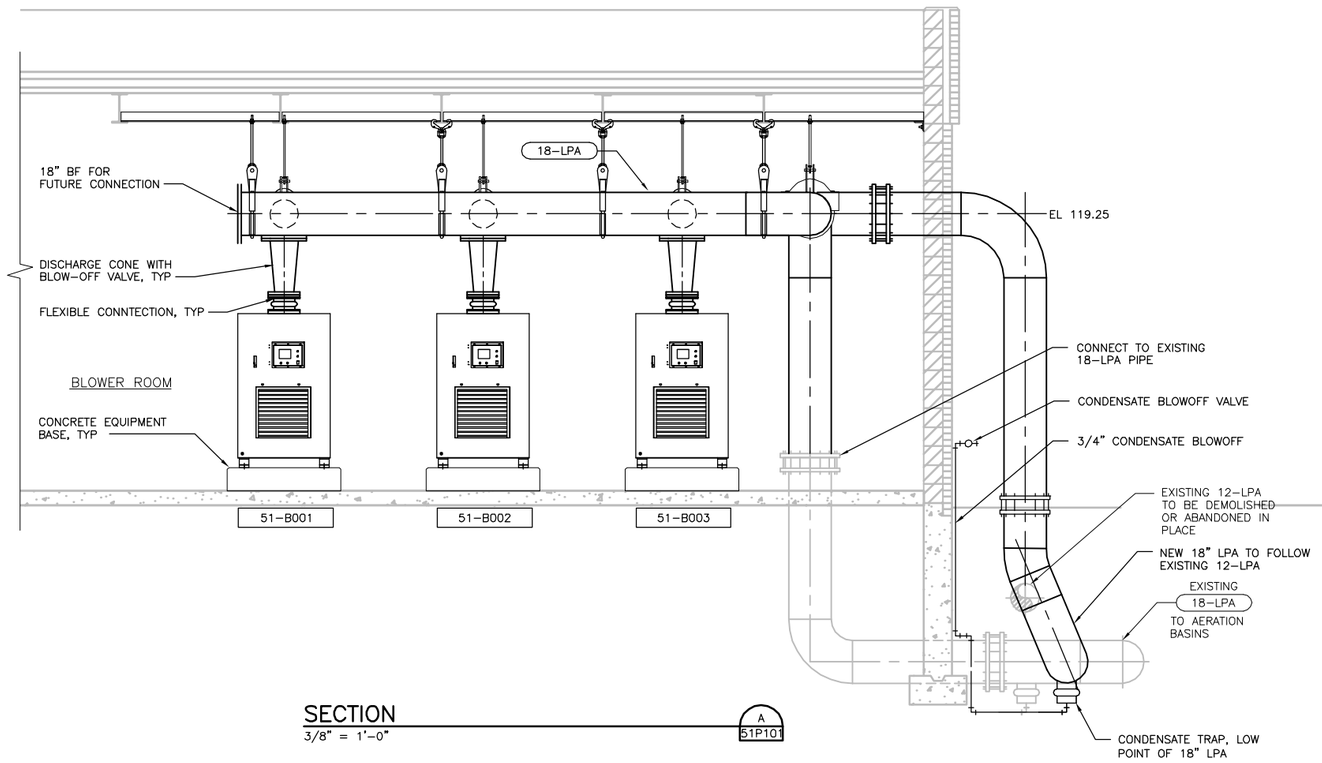

SECTION
3/8" = 1'-0"
A 51P101

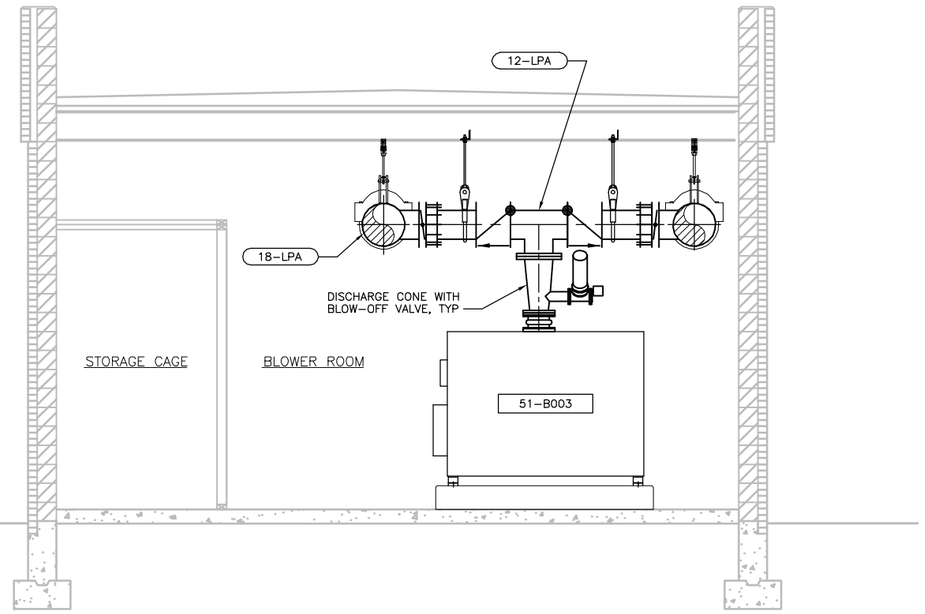

SECTION
3/8" = 1'-0"
B 51P101

FILE: 215786-51P102.dwg
DATE: Oct 06, 2015-4:22:54pm, ranider

HDR Engineering, Inc.

ISSUE	DATE	DESCRIPTION
A	JUNE 2015	ISSUED FOR BID

PROJECT MANAGER	C. OLSON
DESIGNED	T. KONTONICKAS
DESIGNED	
CHECKED	C. OLSON
DRAWN	B. DOWN
DATE	JUNE 30, 2015
PROJECT NUMBER	215786

REGISTERED PROFESSIONAL ENGINEER
THEODORE H. KONTONICKAS
NO. 29378
EXP. 06/30/17
MECHANICAL
STATE OF CALIFORNIA
06-30-15

CITY OF PINOLE CALIFORNIA 1903

PINOLE/HERCULES
WATER POLLUTION
CONTROL PLANT UPGRADE
CLIENT PN

PROCESS
EXISTING BLOWER BUILDING
MODIFICATIONS SECTIONS AND DETAILS

0 1" 2"

FILENAME	215786-51P102
SCALE	AS NOTED

SHEET
51P102

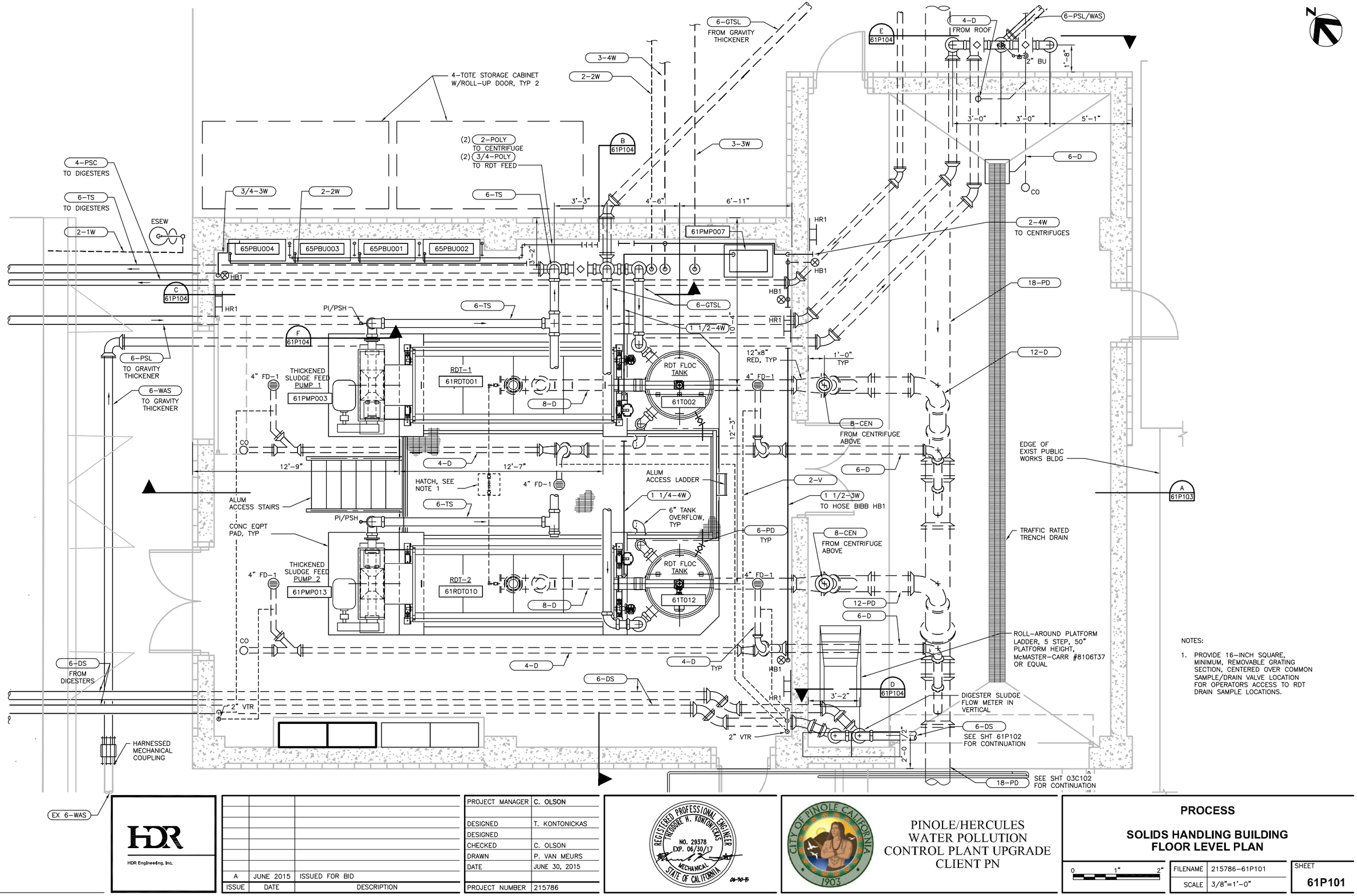

NOTES:

1. PROVIDE 16-INCH SQUARE, MINIMUM, REMOVABLE GRATING SECTION, CENTERED OVER COMMON SAMPLE/DRAIN VALVE LOCATION FOR OPERATORS ACCESS TO RDT DRAIN SAMPLE LOCATIONS.

FILE: 215786-61P101.dwg
DATE: Oct 06, 2015-4:23:10pm, rander

HDR Engineering, Inc.

ISSUE	DATE	DESCRIPTION
A	JUNE 2015	ISSUED FOR BID

PROJECT MANAGER	C. OLSON
DESIGNED	T. KONTONICKAS
DESIGNED	
CHECKED	C. OLSON
DRAWN	P. VAN MEURS
DATE	JUNE 30, 2015
PROJECT NUMBER	215786

REGISTERED PROFESSIONAL ENGINEER THEODORE H. KONTONICKAS NO. 29378 EXP. 06/30/17 MECHANICAL STATE OF CALIFORNIA

PINOLE/HERCULES WATER POLLUTION CONTROL PLANT UPGRADE CLIENT PN

PROCESS

SOLIDS HANDLING BUILDING FLOOR LEVEL PLAN

0 1" 2"

FILENAME	215786-61P101
SCALE	3/8"=1'-0"

SHEET **61P101**

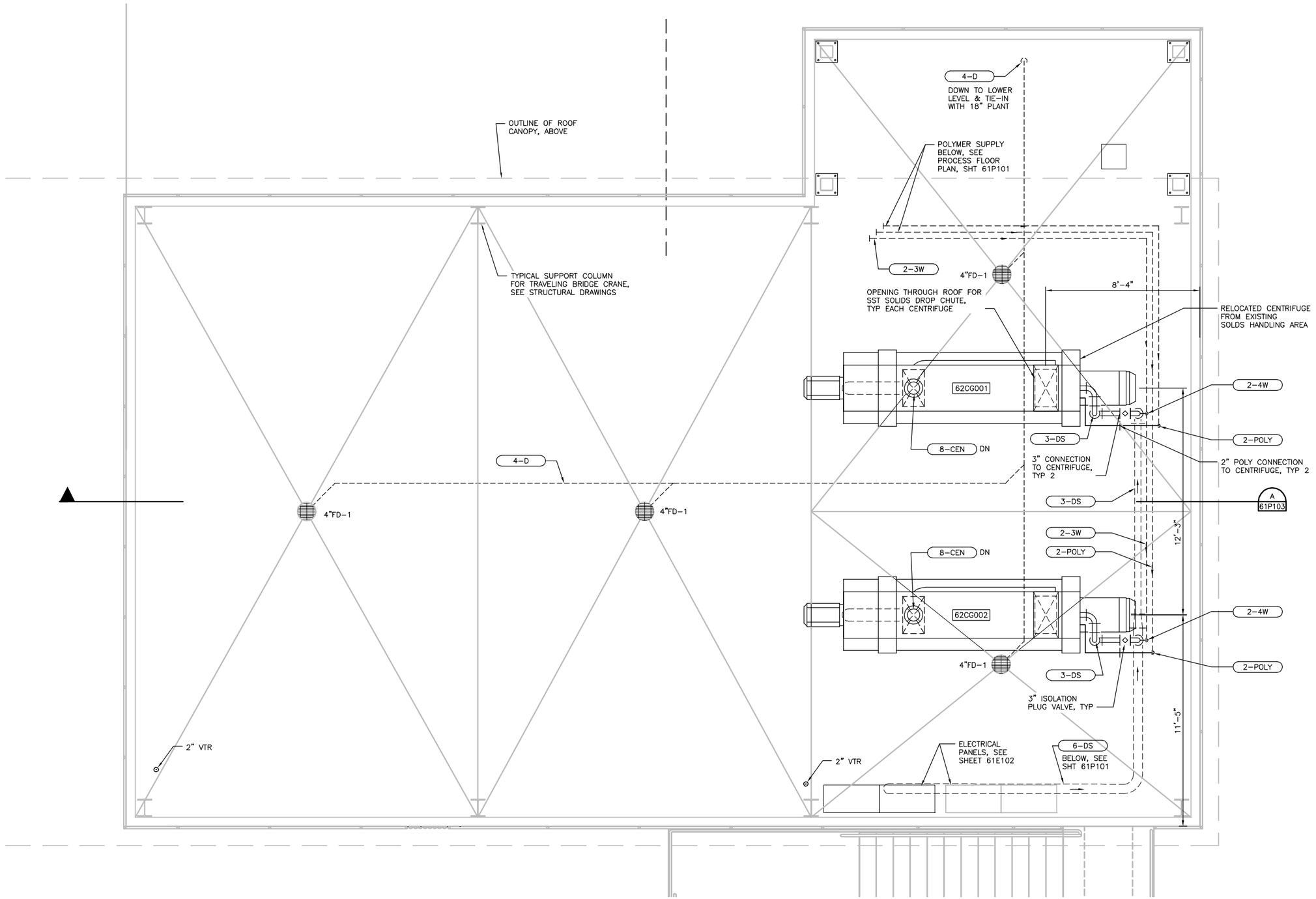

FILE: 215786–61P102.dwg
DATE: Oct 06, 2015–4:23:18pm, rsnider

HDR Engineering, Inc.

ISSUE	DATE	DESCRIPTION
A	JUNE 2015	ISSUED FOR BID

PROJECT MANAGER	C. OLSON
DESIGNED	T. KONTONICKAS
DESIGNED	
CHECKED	C. OLSON
DRAWN	P. VAN MEURS
DATE	JUNE 30, 2015
PROJECT NUMBER	215786

REGISTERED PROFESSIONAL ENGINEER
THEODORE H. KONTONICKAS
NO. 29378
EXP. 06/30/17
MECHANICAL
STATE OF CALIFORNIA
06-30-15

CITY OF PINOLE CALIFORNIA 1903

PINOLE/HERCULES
WATER POLLUTION
CONTROL PLANT UPGRADE
CLIENT PN

PROCESS

SOLIDS HANDLING BUILDING ROOF LEVEL PLAN

0 1" 2"

FILENAME	215786–61P102
SCALE	3/8"=1'–0"

SHEET **61P102**

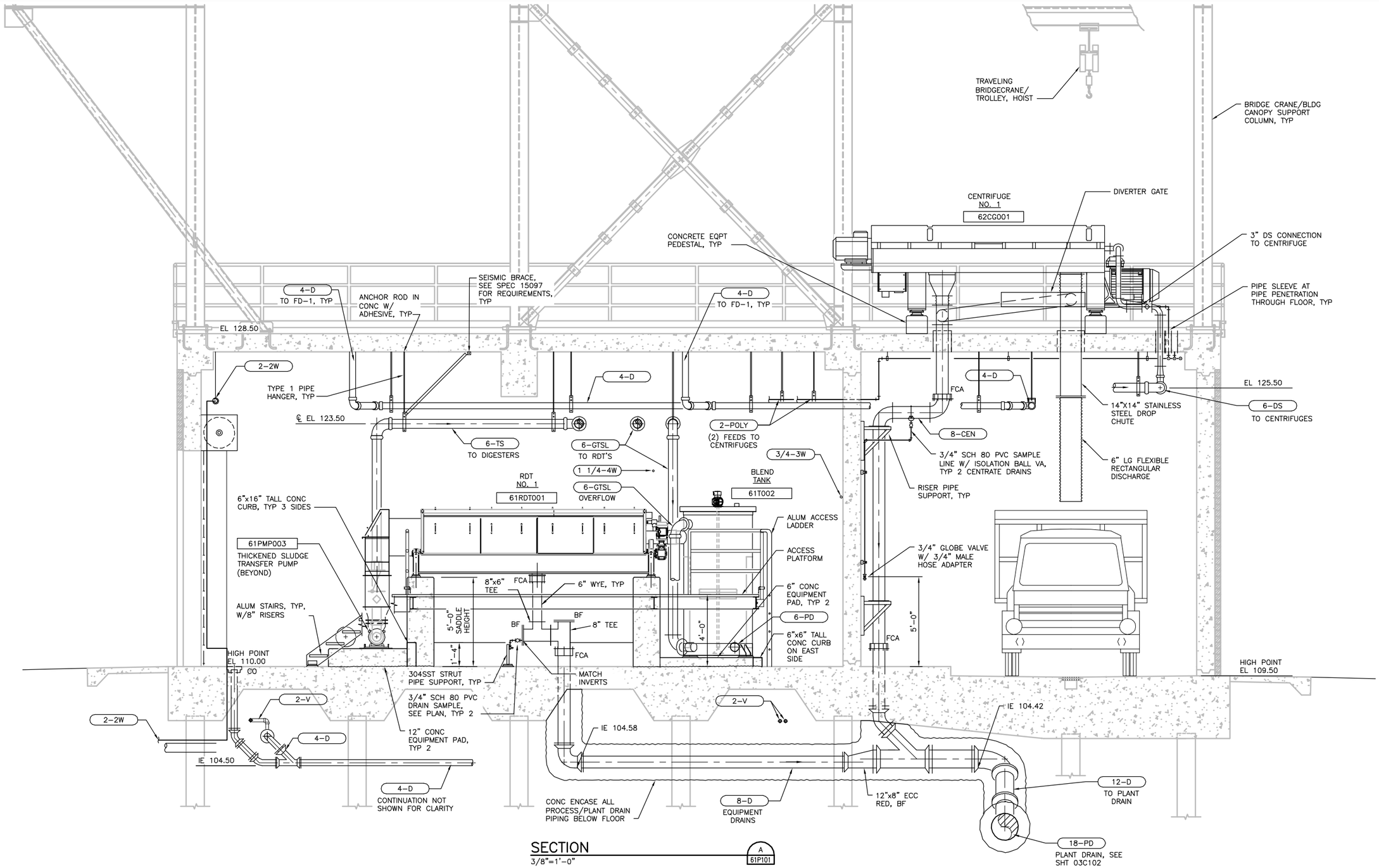

SECTION

3/8"=1'-0"

A 61P101

ISSUE	DATE	DESCRIPTION
A	JUNE 2015	ISSUED FOR BID

PROJECT MANAGER	C. OLSON
DESIGNED	T. KONTONICKAS
DESIGNED	
CHECKED	C. OLSON
DRAWN	P. VAN MEURS
DATE	JUNE 30, 2015
PROJECT NUMBER	215786

REGISTERED PROFESSIONAL ENGINEER THEODORE H. KONTONICKAS NO. 29378 EXP. 06/30/17 MECHANICAL STATE OF CALIFORNIA 06-30-15

HDR Engineering, Inc.

PINOLE/HERCULES WATER POLLUTION CONTROL PLANT UPGRADE CLIENT PN

PROCESS

SOLIDS HANDLING BUILDING SECTIONS 1

0 1" 2"

FILENAME	215786-61P103
SCALE	3/8"=1'-0"

SHEET **61P103**

FILE: 215786-61P103.dwg
DATE: Oct 06, 2015-4:23:25pm, rsnider

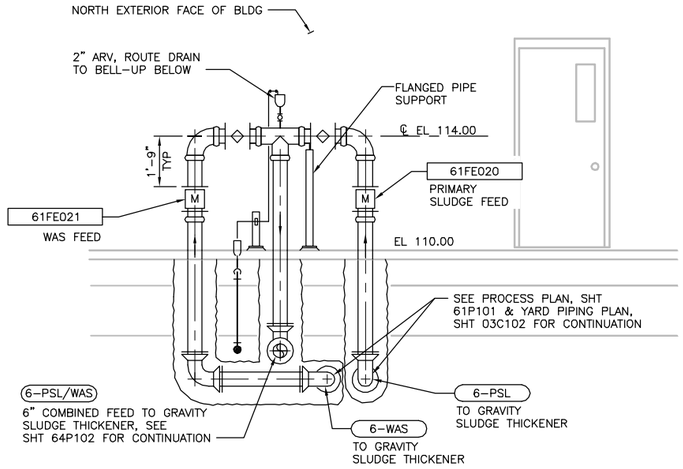

SECTION
3/8" = 1'-0"
E 61P101

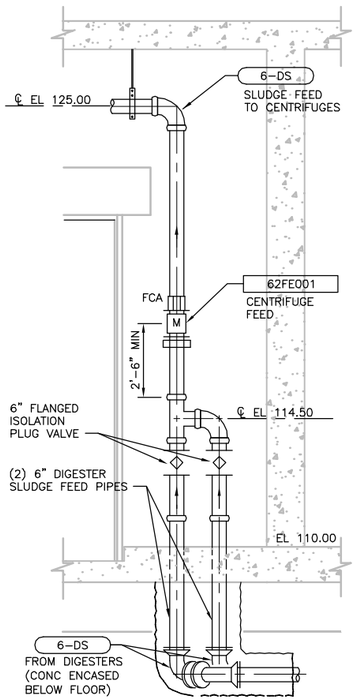

SECTION
3/8" = 1'-0"
D 61P101

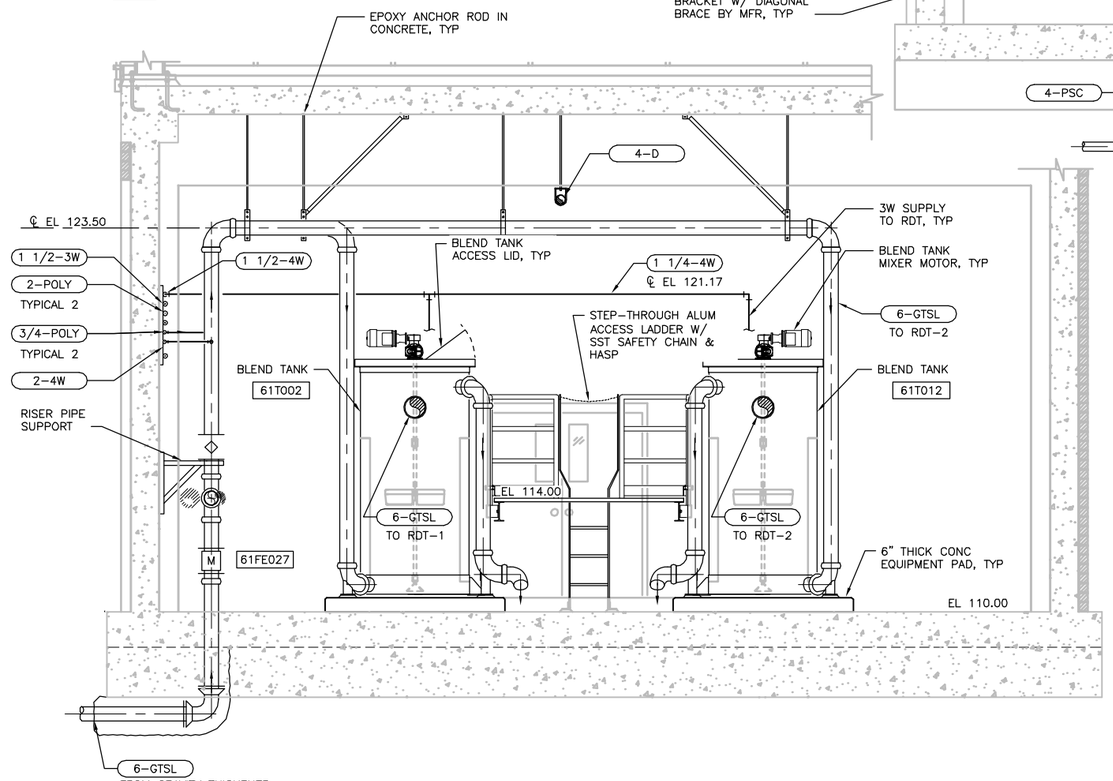

SECTION
3/8" = 1'-0"
B 61P101

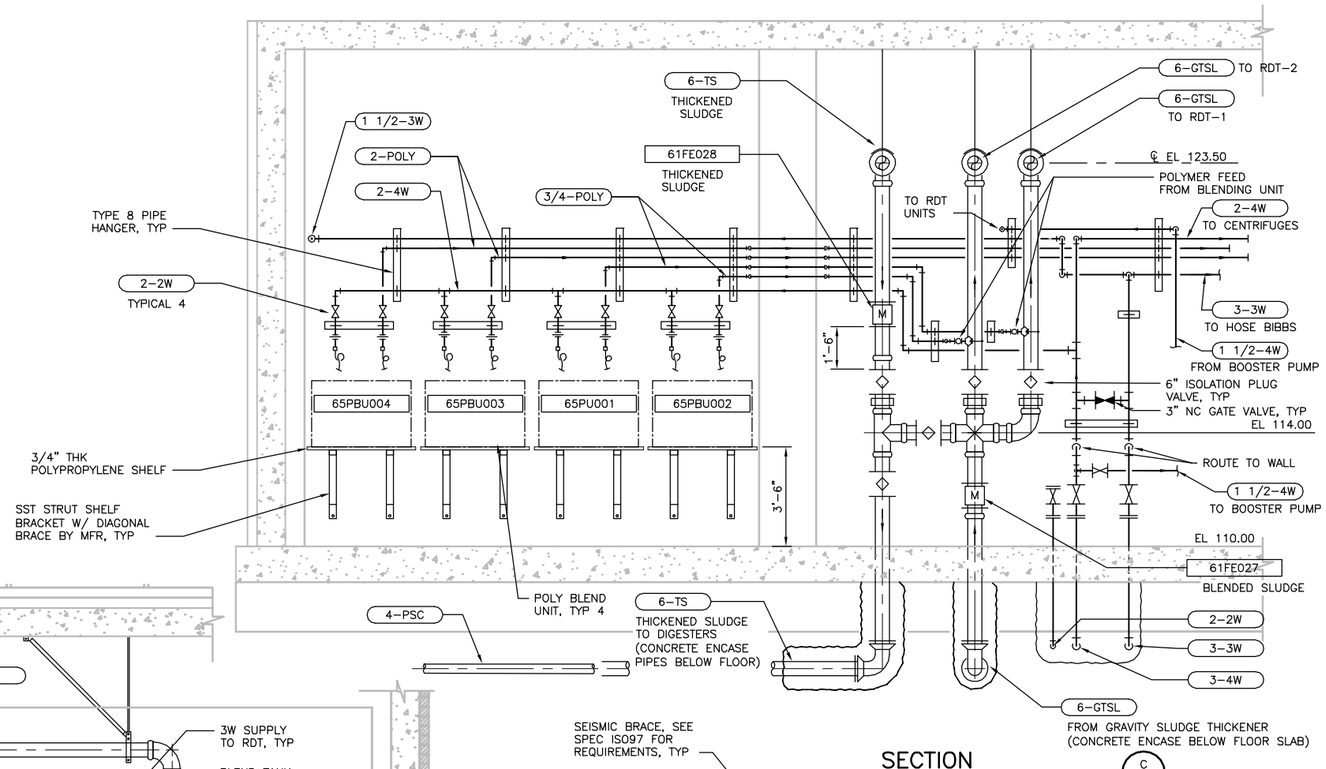

SECTION
3/8" = 1'-0"
C 61P101

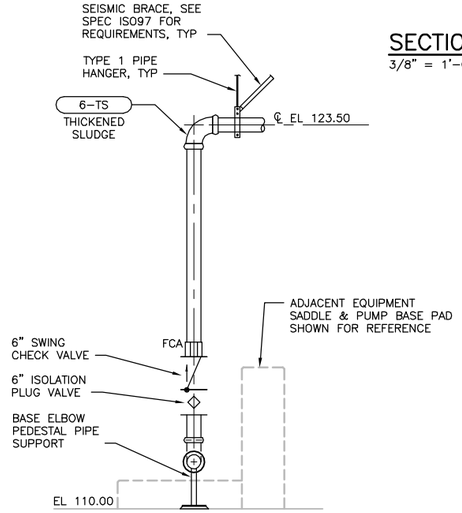

SECTION
3/8" = 1'-0"
F 61P101

FILE: 215786-61P104.dwg
DATE: Oct 06, 2015-4:23:33pm, ranider

HDR Engineering, Inc.

ISSUE	DATE	DESCRIPTION
A	JUNE 2015	ISSUED FOR BID

PROJECT MANAGER	C. OLSON
DESIGNED	T. KONTONICKAS
DESIGNED	
CHECKED	C. OLSON
DRAWN	P. VAN MEURS
DATE	JUNE 30, 2015
PROJECT NUMBER	215786

REGISTERED PROFESSIONAL ENGINEER THEODORE H. KONTONICKAS NO. 29378 EXP. 06/30/17 MECHANICAL STATE OF CALIFORNIA 06-30-15

CITY OF PINOLE CALIFORNIA 1903

PINOLE/HERCULES
WATER POLLUTION
CONTROL PLANT UPGRADE
CLIENT PN

PROCESS

SOLIDS HANDLING BUILDING SECTIONS II

0 1" 2"

FILENAME	215786-61P104
SCALE	3/8"=1'-0"

SHEET
61P104

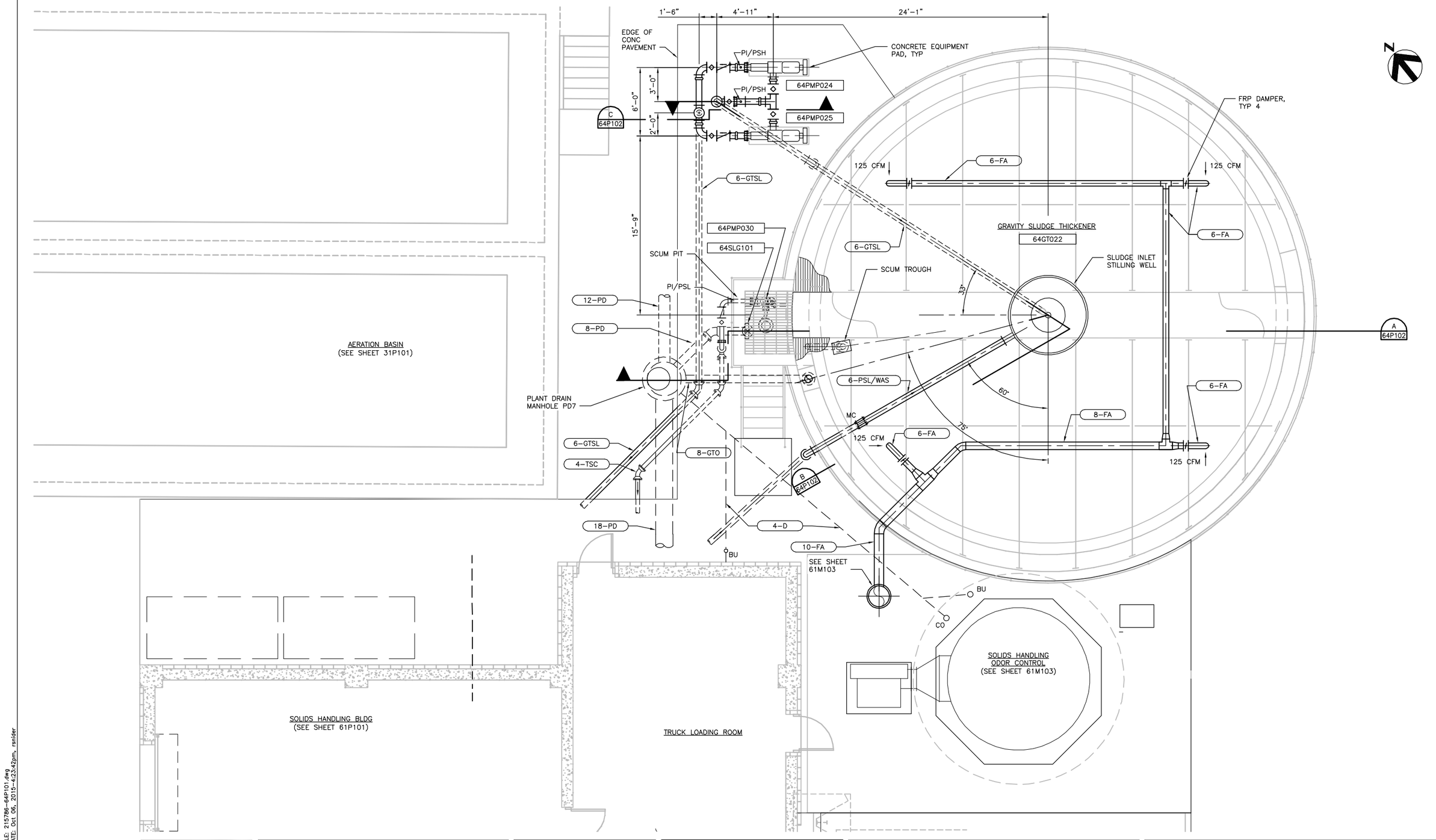

FILE: 215786-64P101.dwg
DATE: Oct 06, 2015-4:23:42pm, rsnider

HDR Engineering, Inc.

ISSUE	DATE	DESCRIPTION
A	JUNE 2015	ISSUED FOR BID

PROJECT MANAGER	C. OLSON
DESIGNED	T. KONTONICKAS
DESIGNED	
CHECKED	C. OLSON
DRAWN	P. VAN MEURS
DATE	JUNE 30, 2015
PROJECT NUMBER	215786

REGISTERED PROFESSIONAL ENGINEER
THEODORE H. KONTONICKAS
NO. 29378
EXP. 06/30/17
MECHANICAL
STATE OF CALIFORNIA
06-30-15

CITY OF PINOLE CALIFORNIA 1903

PINOLE/HERCULES
WATER POLLUTION
CONTROL PLANT UPGRADE
CLIENT PN

PROCESS

GRAVITY SLUDGE THICKENER PLAN

0 1" 2"

FILENAME	215786-64P101
SCALE	1/4"=1'-0"

SHEET
64P101

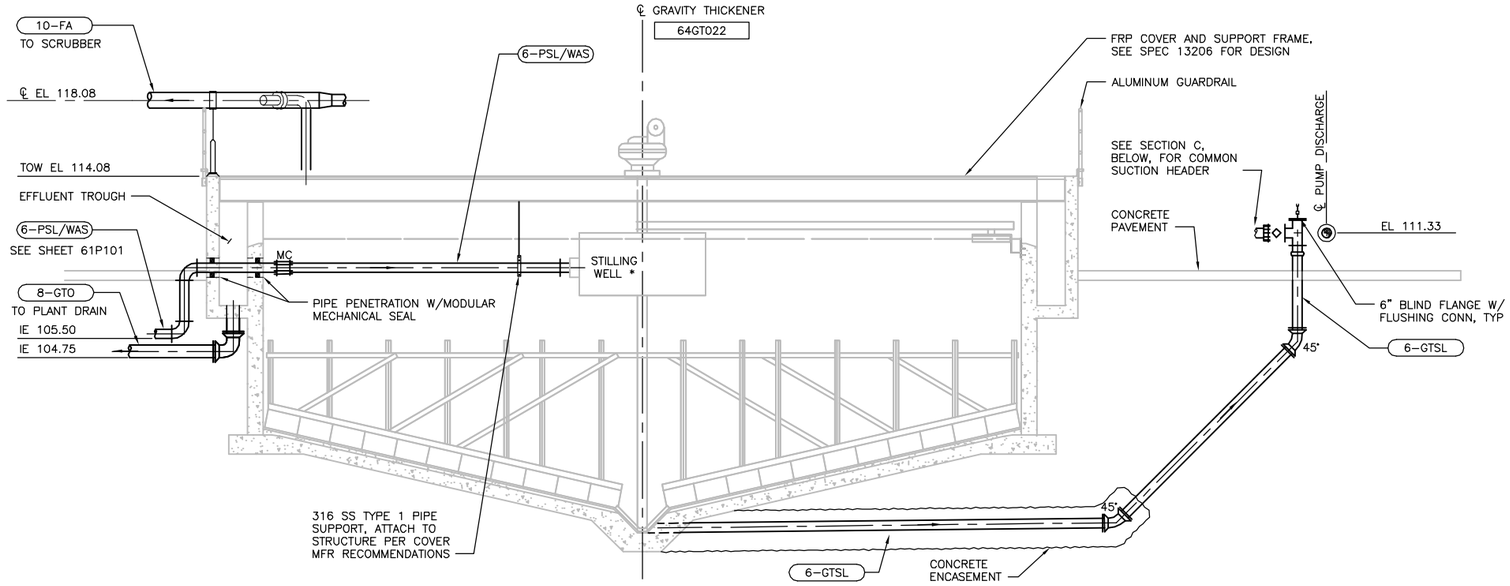

SECTION
1/4" = 1'-0"
B 64P101

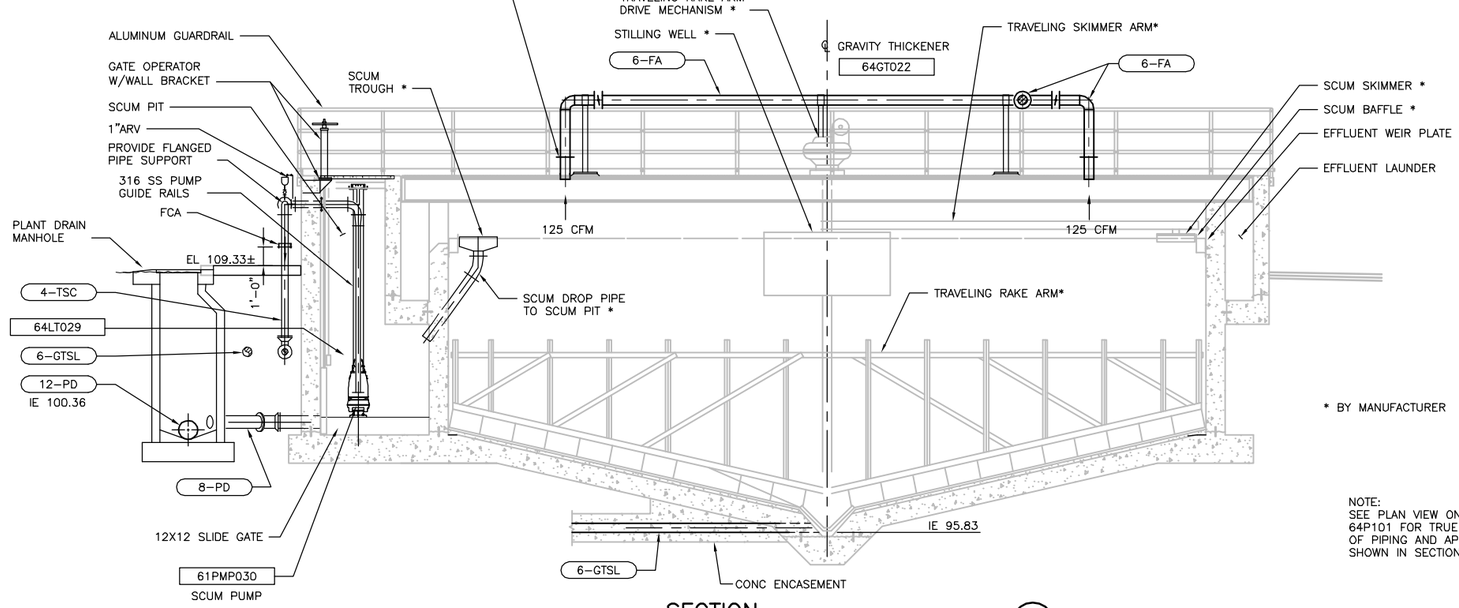

SECTION
1/4" = 1'-0"
A 64P101

* BY MANUFACTURER

NOTE:
SEE PLAN VIEW ON SHEET 64P101 FOR TRUE ORIENTATION OF PIPING AND APPURTENANCES SHOWN IN SECTION.

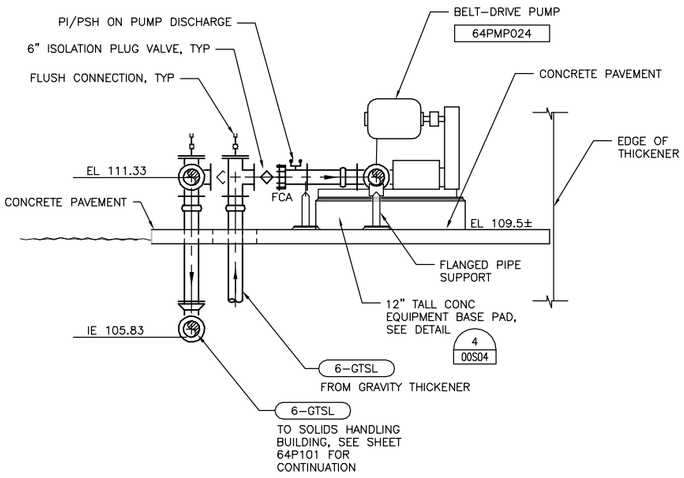

SECTION
3/8" = 1'-0"
C 64P101

FILE: 215786-64P102.dwg
DATE: Oct 06, 2015-4:23:49pm, ranider

HDR Engineering, Inc.

ISSUE	DATE	DESCRIPTION
A	JUNE 2015	ISSUED FOR BID

PROJECT MANAGER	C. OLSON
DESIGNED	T. KONTONICKAS
DESIGNED	
CHECKED	C. OLSON
DRAWN	P. VAN MEURS
DATE	JUNE 30, 2015
PROJECT NUMBER	215786

REGISTERED PROFESSIONAL ENGINEER THEODORE H. KONTONICKAS NO. 29378 EXP. 06/30/17 MECHANICAL STATE OF CALIFORNIA 06-30-15

CITY OF PINOLE CALIFORNIA 1903

PINOLE/HERCULES WATER POLLUTION CONTROL PLANT UPGRADE CLIENT PN

PROCESS

GRAVITY SLUDGE THICKENER SECTIONS

0 1" 2"

FILENAME	215786-64P102
SCALE	1/4"=1'-0"

SHEET **64P102**

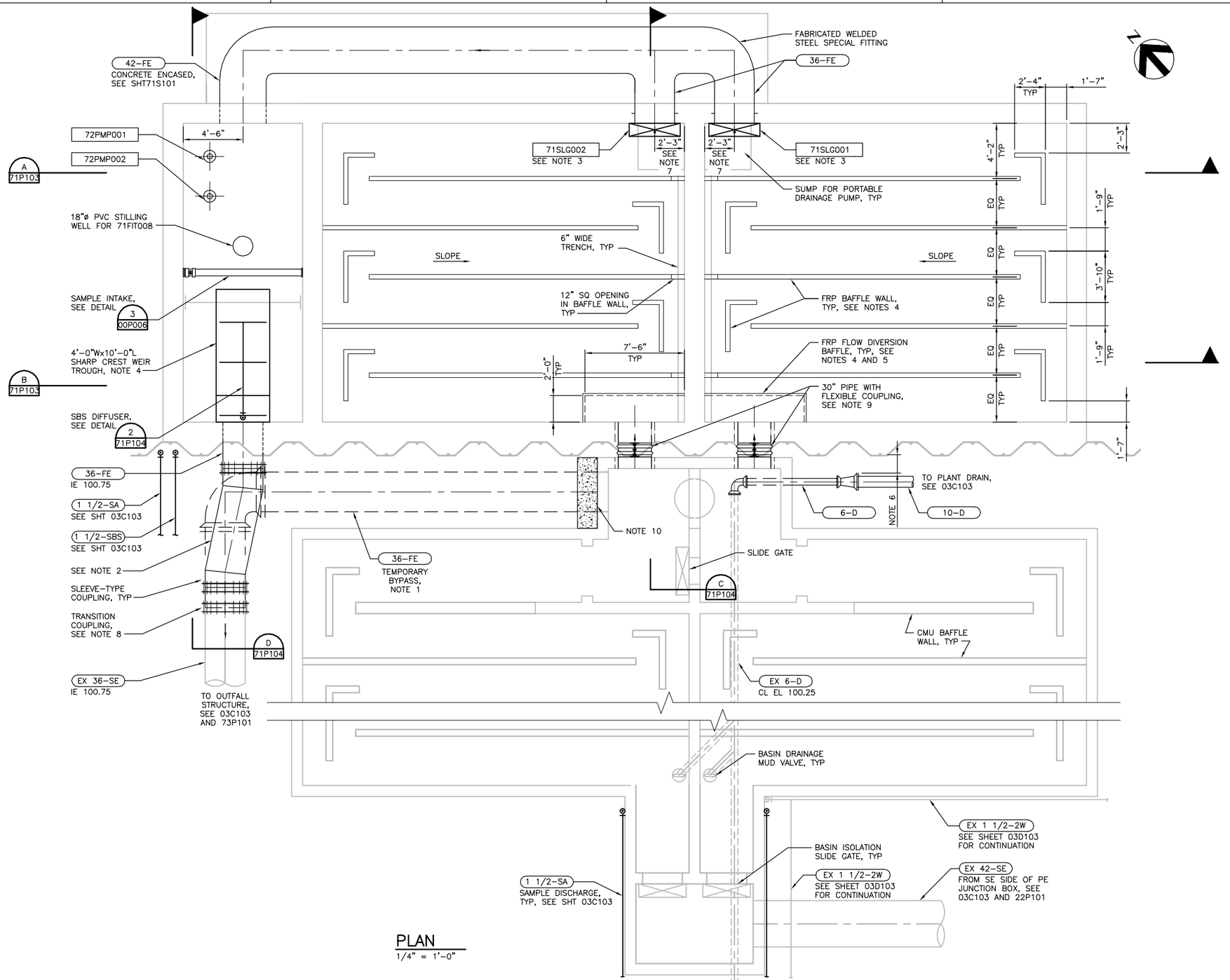

PLAN
1/4" = 1'–0"

NOTES:

1. SEE CONSTRUCTION SEQUENCING SHEET 00G016 AND SPECIFICATION 01650 FOR CONSTRUCTION CONSTRAINTS.
2. PROVIDE FABRICATED MITERED STEEL FITTING. FIELD VERIFY INVERTS AND LOCATION OF EXISTING PIPE BEFORE ORDERING.
3. INSTALL SLIDE GATE PER MANUFACTURER'S RECOMMENDATIONS.
4. FRP MANUFACTURER TO DESIGN AND SUPPLY ALL MATERIALS FOR FLOW DIVERSION BAFFLE, BAFFLE WALL, AND WEIR TROUGH AND SUPPORTS.
5. PROVIDE PERFORATED FRP TOP COVER WITH A TOTAL OF SIX 2" DIAMETER HOLES, IN LINE AND EQUALLY SPACED.
6. PROVIDE PRACTICAL MINIMUM DISTANCE BETWEEN SHEET PILE AND 10–D PIPE.
7. FIELD LOCATE CAST–IN–PLACE 36–FE WALL PIPE WITH SPECIAL FITTING.
8. EXISTING 36–FE IS ASSUMED TO BE RCP. CONTRACTOR TO FIELD VERIFY.
9. FLEXIBLE COUPLING TO BE DEPEND–O–LOK STYLE 233 COUPLING OR EQUAL WITH EPOXY COATED AND STAINLESS STEEL BOLTS, NUTS, AND WASHERS.
10. PLUG TEMPORARY 36–FE AFTER USE.

FILE: 215786–71P101.dwg
DATE: Oct 06, 2015–4:23:55pm, ranider

HDR Engineering, Inc.

ISSUE	DATE	DESCRIPTION
A	JUNE 2015	ISSUED FOR BID

PROJECT MANAGER	C. OLSON
DESIGNED	M. PERINPANAYAGAM
DESIGNED	M. BECK
CHECKED	C. OLSON
DRAWN	M. FOYLE
DATE	JUNE 30, 2015
PROJECT NUMBER	215786

REGISTERED PROFESSIONAL ENGINEER MALINMAGAL PERINPANAYAGAM NO. 76120 EXP. 06/30/16 CIVIL STATE OF CALIFORNIA

CITY OF PINOLE CALIFORNIA 1903

PINOLE/HERCULES WATER POLLUTION CONTROL PLANT UPGRADE CLIENT PN

PROCESS

CHLORINE CONTACT BASINS BOTTOM PLAN

0 1" 2"

FILENAME	215786–71P101
SCALE	AS NOTED

SHEET 71P101

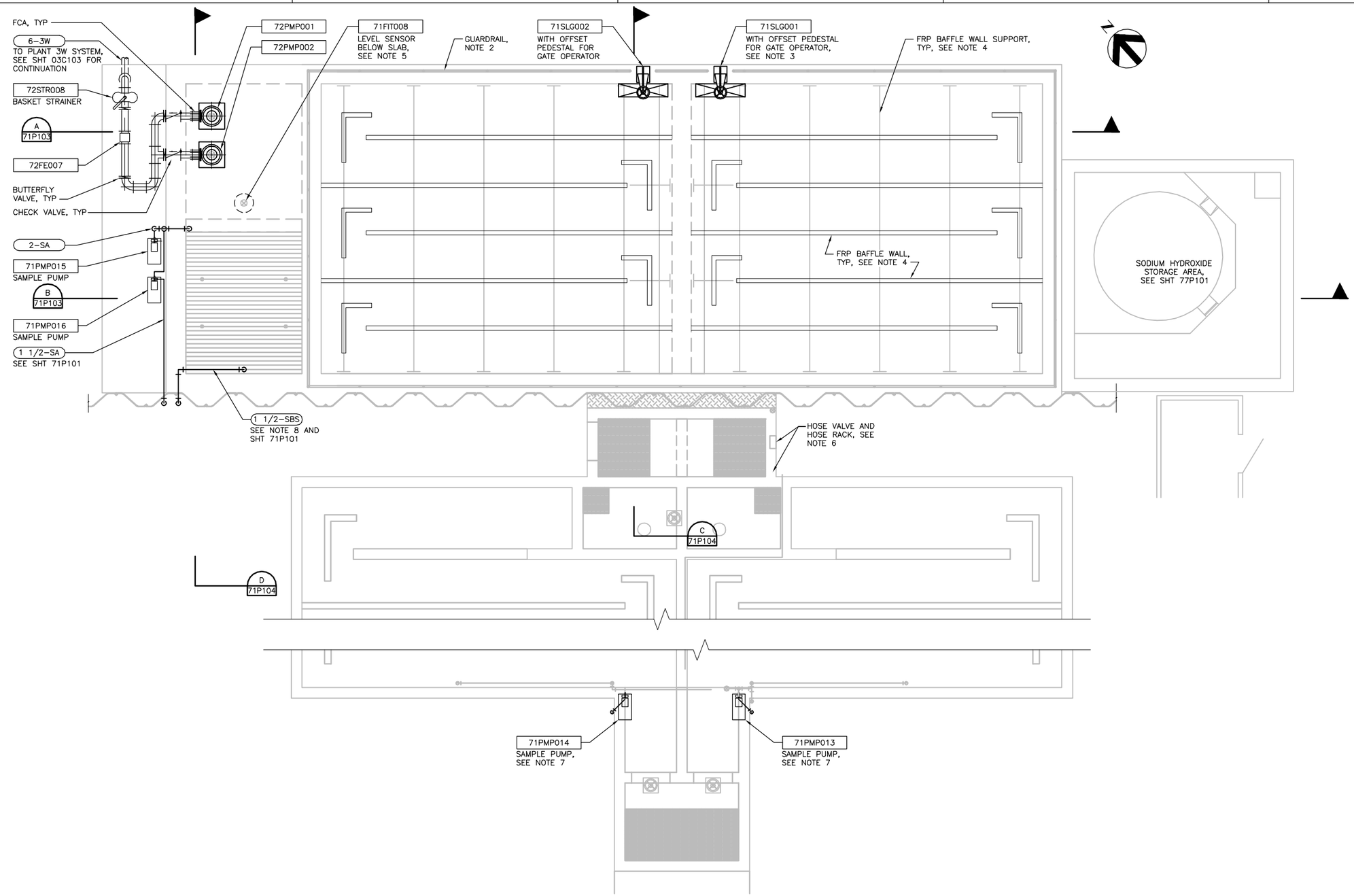

PLAN
1/4" = 1'-0"

NOTES:

1. SEE CONSTRUCTION SEQUENCING SHEET 00G015 AND SPECIFICATION SECTION 01650 FOR CONSTRUCTION CONSTRAINTS.
2. INSTALL GUARDRAIL AS NECESSARY TO AVOID GATE OPERATOR PEDESTAL.
3. INSTALL SLIDE GATE PER MANUFACTURER'S RECOMMENDATIONS.
4. FRP MANUFACTURER TO DESIGN AND SUPPLY ALL MATERIALS FOR FLOW DIVERSION BAFFLE, BAFFLE WALL, AND WEIR TROUGH AND SUPPORTS.
5. INSTALL ULTRASONIC LEVEL SENSOR PER DETAIL 4 ON SHEET 00P006.
6. RELOCATE EXISTING HOSE RACK AND HOSE VALVE AS REQUIRED.
7. REPLACE EXISTING SAMPLE PUMPS WITH NEW SAMPLE PUMPS AND CONNECT TO EXISTING SUCTION SAMPLE PIPES. PROVIDE NEW DISCHARGE PIPING AS SHOWN.
8. SEE DETAIL 2 ON SHEET 00P006 FOR CONTAINMENT PIPE TERMINATION.

FILE: 215786-71P102.dwg
DATE: Oct 06, 2015--4:24:01pm, rsnider

HDR Engineering, Inc.

ISSUE	DATE	DESCRIPTION
A	JUNE 2015	ISSUED FOR BID

PROJECT MANAGER	C. OLSON
DESIGNED	M. PERINPANAYAGAM
DESIGNED	M. BECK
CHECKED	C. OLSON
DRAWN	M. FOYLE
DATE	JUNE 30, 2015
PROJECT NUMBER	215786

REGISTERED PROFESSIONAL ENGINEER
MAHAMMAL PERINPANAYAGAM
NO. 76120
EXP. 06/30/16
CIVIL
STATE OF CALIFORNIA
06-30-15

CITY OF PINOLE CALIFORNIA 1903

PINOLE/HERCULES
WATER POLLUTION
CONTROL PLANT UPGRADE
CLIENT PN

PROCESS

CHLORINE CONTACT BASINS TOP PLAN

0 1" 2"

FILENAME	215786-71P102
SCALE	AS NOTED

SHEET
71P102

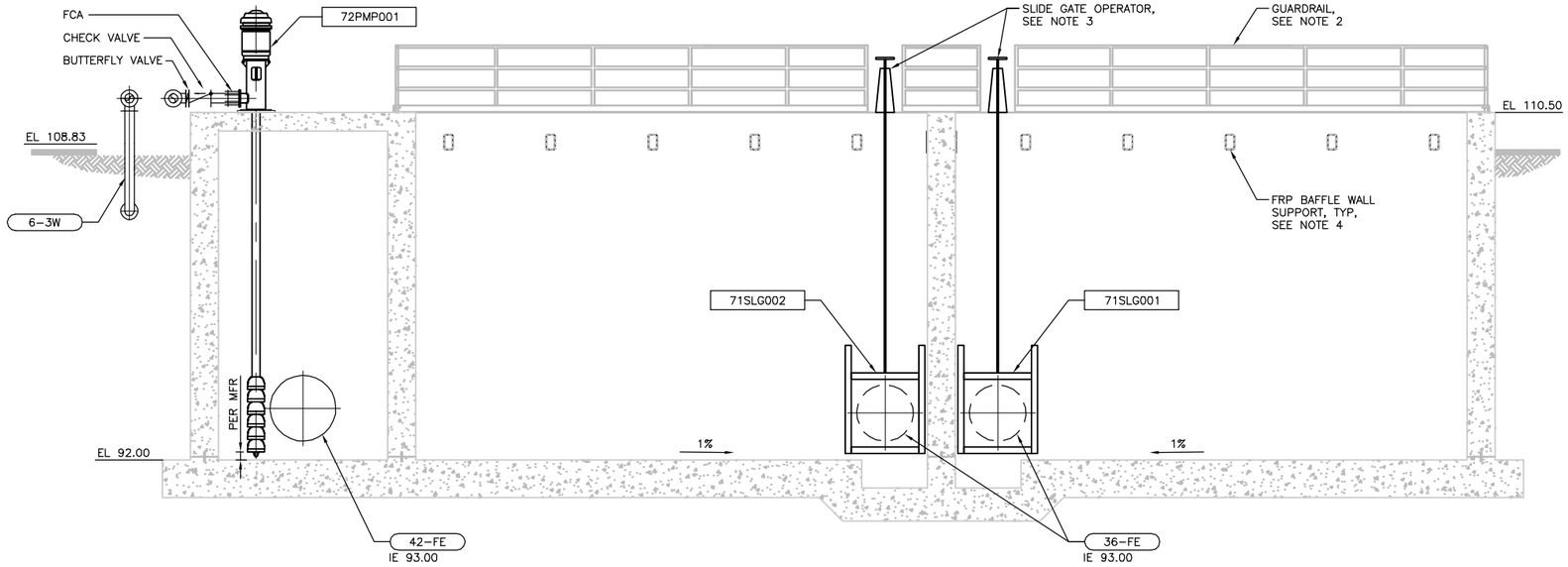

SECTION
1/4" = 1'-0"
A 71P101

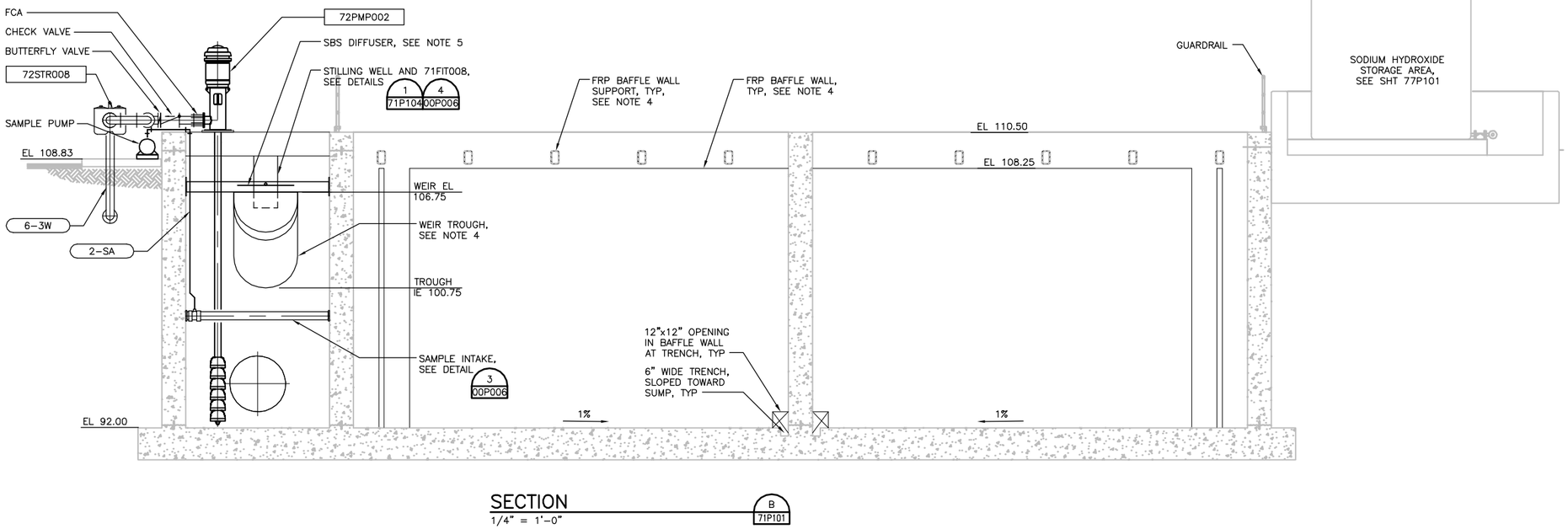

SECTION
1/4" = 1'-0"
B 71P101

NOTES:

1. SEE CONSTRUCTION SEQUENCING SHEET 00G015 AND SPECIFICATION SECTION 01650 FOR CONSTRUCTION CONSTRAINTS.
2. INSTALL GUARDRAIL AS NECESSARY TO AVOID GATE OPERATOR PEDESTAL.
3. INSTALL SLIDE GATE PER MANUFACTURER'S RECOMMENDATIONS.
4. FRP MANUFACTURER TO DESIGN AND SUPPLY ALL MATERIALS FOR BAFFLE WALLS, WEIR TROUGH, AND ALL SUPPORTS.
5. CONTRACTOR TO DESIGN AND PROVIDE PIPE SUPPORT FOR SBS DIFFUSER PIPING.

FILE: 215786-71P103.dwg
DATE: Oct 06, 2015-4:24:08pm, rsnider

HDR Engineering, Inc.

ISSUE	DATE	DESCRIPTION
A	JUNE 2015	ISSUED FOR BID

PROJECT MANAGER	C. OLSON
DESIGNED	M. PERINPANAYAGAM
DESIGNED	M. BECK
CHECKED	C. OLSON
DRAWN	M. FOYLE
DATE	JUNE 30, 2015
PROJECT NUMBER	215786

REGISTERED PROFESSIONAL ENGINEER
MALKANGAL PERINPANAYAGAM
NO. 76120
EXP. 06/30/16
CIVIL
STATE OF CALIFORNIA
06-30-15

CITY OF PINOLE CALIFORNIA 1903

PINOLE/HERCULES
WATER POLLUTION
CONTROL PLANT UPGRADE
CLIENT PN

PROCESS

CHLORINE CONTACT BASINS SECTIONS

0 1" 2"

FILENAME	215786-71P103
SCALE	AS NOTED

SHEET
71P103

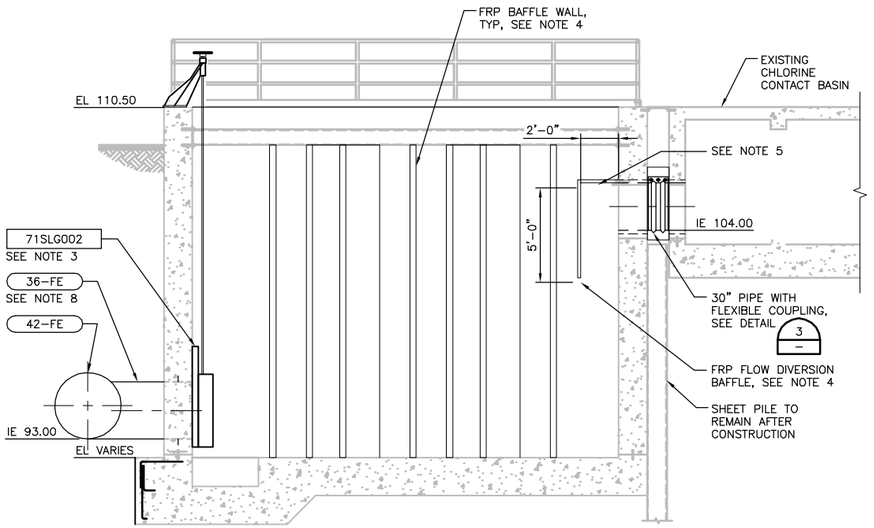

SECTION
1/4" = 1'-0"
C 71P101

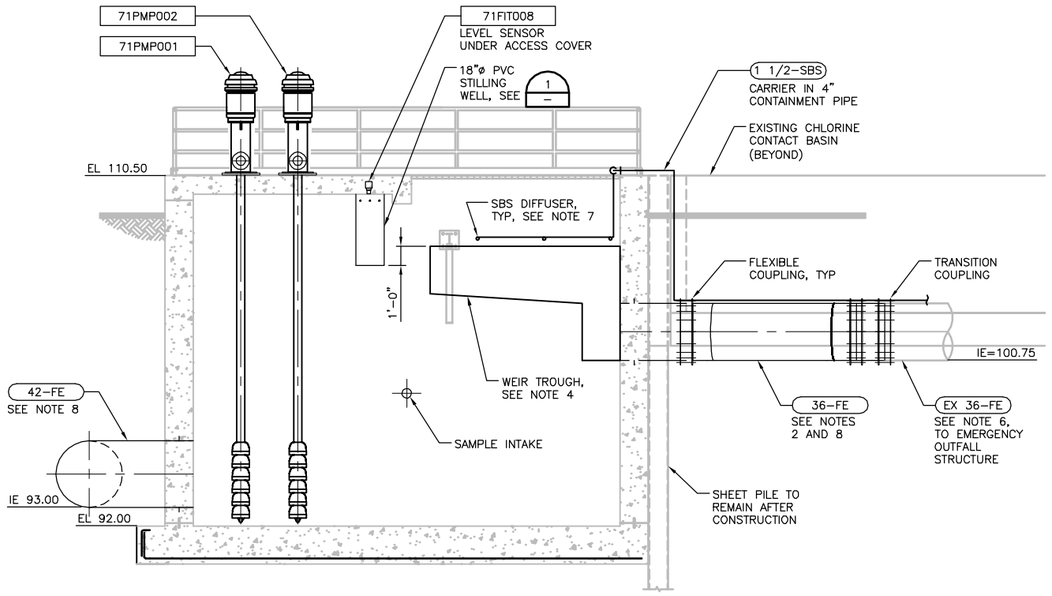

SECTION
1/4" = 1'-0"
D 71P101

NOTES:

1. SEE CONSTRUCTION SEQUENCING SHEET 00G015 AND SPECIFICATION 01650 FOR CONSTRUCTION CONSTRAINTS.
2. PROVIDE FABRICATED MITERED STEEL FITTING. FIELD VERIFY INVERTS AND LOCATION OF EXISTING PIPE BEFORE ORDERING.
3. INSTALL SLIDE GATE PER MANUFACTURER'S RECOMMENDATIONS.
4. FRP MANUFACTURER TO DESIGN AND SUPPLY ALL MATERIALS FOR FLOW DIVERSION BAFFLE, BAFFLE WALL, AND WEIR TROUGH AND SUPPORTS.
5. PROVIDE PERFORATED FRP TOP COVER WITH A TOTAL OF SIX 2" DIAMETER HOLES, IN LINE AND EQUALLY SPACED.
6. EXISTING 36-FE IS ASSUMED TO BE RCP. CONTRACTOR TO FIELD VERIFY.
7. CONTRACTOR TO DESIGN AND PROVIDE PIPE SUPPORT FOR SBS DIFFUSER PIPING.
8. SEE SPECIFICATION SECTION 01800 FOR OPENINGS AND PENETRATIONS IN WALL.

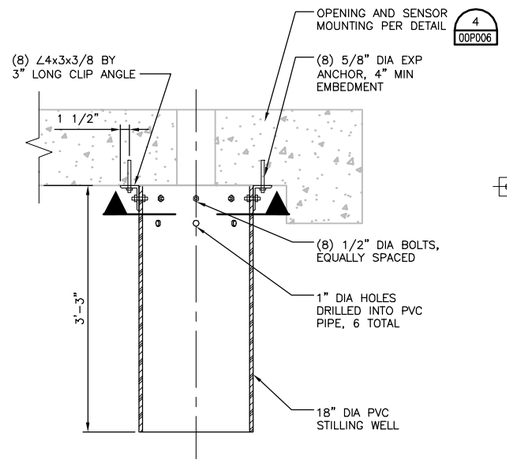

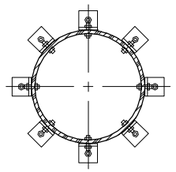

SECTION

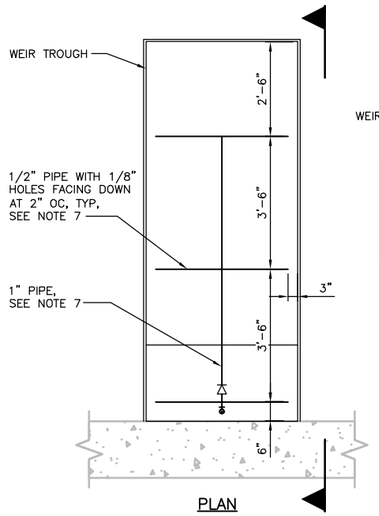

PLAN

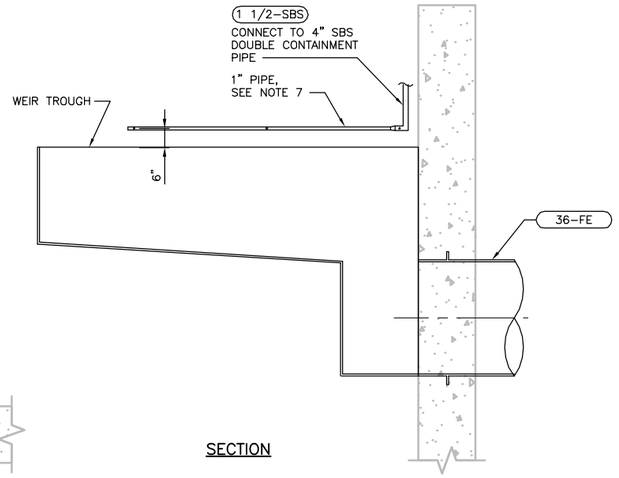

SECTION

NOTES:

1. SEE SPECIFICATION SECTION 01800 FOR OPENINGS AND PENETRATIONS.
2. BLOCKOUT FOR EXPANSION JOINT, TYPICAL AT TWO LOCATIONS. CONTRACTOR TO DESIGN BLOCKOUT AND FURNISH SUITABLE MATERIAL.
3. ANY FILLING ATTACHED TO EXISTING STRUCTURE THROUGH BLOCKOUT IS NOT ALLOWED.
4. FLEXIBLE COUPLING TO BE DEPEND-O-LOK STYLE 233 COUPLING OR EQUAL WITH EPOXY COATED AND STAINLESS STEEL BOLTS, NUTS, AND WASHERS.

STILLING WELL MOUNTING DETAIL 1
1" = 1'-0"

SBS DIFFUSER MOUNTING DETAIL 2 71P101
1/2" = 1'-0"

30" PIPE INSTALLATION DETAIL 3
3/4" = 1'-0"

FILE: 215786-71P104.dwg
DATE: Oct 06, 2015-4:24:15pm, rsnider

HDR Engineering, Inc.

ISSUE	DATE	DESCRIPTION
A	JUNE 2015	ISSUED FOR BID

PROJECT MANAGER	C. OLSON
DESIGNED	M. PERINPANAYAGAM
DESIGNED	M. BECK
CHECKED	C. OLSON
DRAWN	M. FOYLE
DATE	JUNE 30, 2015
PROJECT NUMBER	215786

REGISTERED PROFESSIONAL ENGINEER MALARMAGAL PERINPANAYAGAM NO. 76120 EXP. 06/30/16 CIVIL STATE OF CALIFORNIA
6-30-15

CITY OF PINOLE CALIFORNIA 1903

PINOLE/HERCULES WATER POLLUTION CONTROL PLANT UPGRADE
CLIENT PN

PROCESS

CHLORINE CONTACT BASINS SECTIONS AND DETAILS

0 1" 2"

FILENAME	215786-71P104
SCALE	AS NOTED

SHEET 71P104

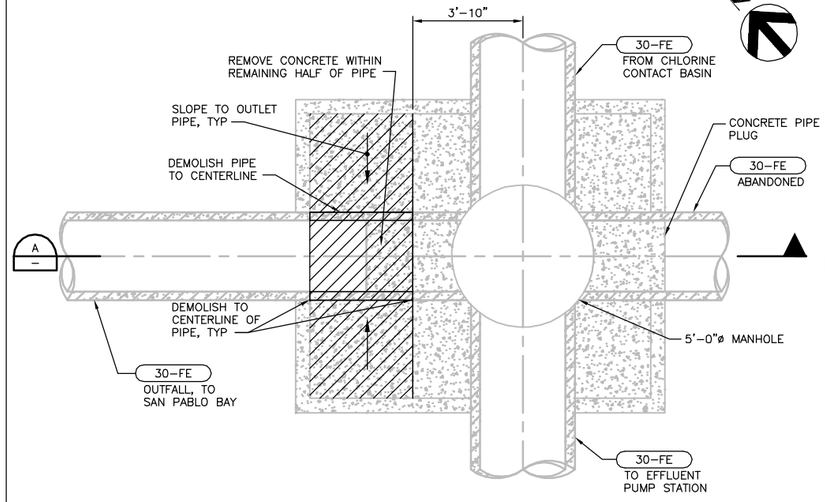

DEMOLITION BOTTOM PLAN

3/8" = 1'–0"

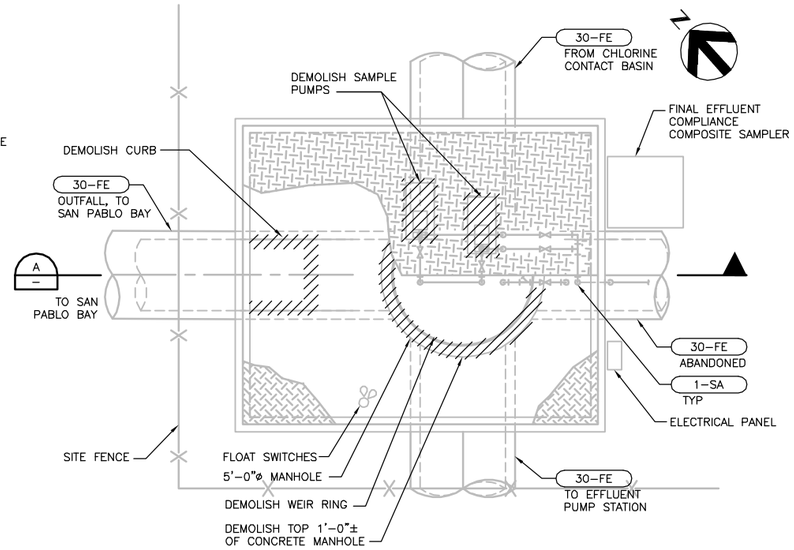

DEMOLITION TOP PLAN

3/8" = 1'–0"

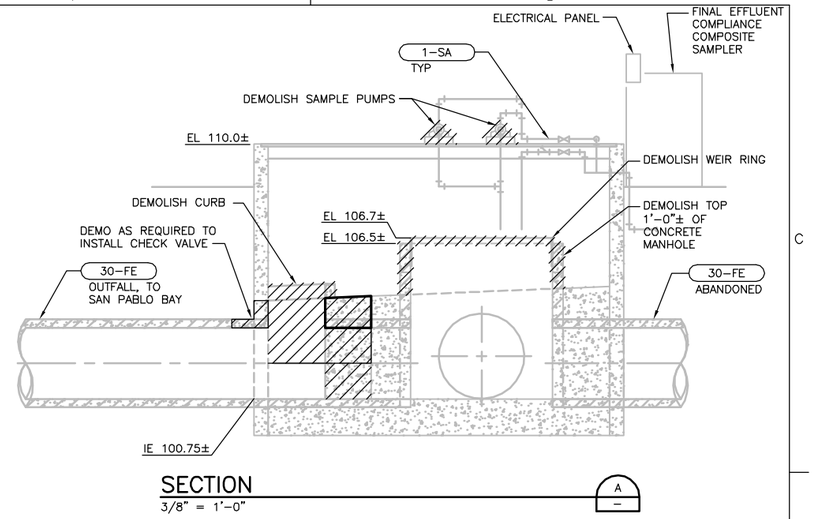

SECTION

3/8" = 1'–0"

NOTES:

1. DUCK BILL CHECK VALVE: SPECIAL ORDER VALVE WITH REDUCED VALVE LENGTH TO FACILITATE INSTALLATION, COORDINATE WITH MANUFACTURER AS REQUIRED.
2. PROVIDE CIRCULAR FRP WEIR WITH SEPARATE FULLY ADJUSTABLE WEIR PLATE (3INCH MINIMUM ADJUSTABILITY), $\frac{1}{2}$" MINIMUM THICKNESS. ALL HARDWARE TO BE 316L STAINLESS STEEL. MANUFACTURER TO SPECIFY NUMBER AND LOCATION OF ANCHORS. GROUT AND SEAL PER MANUFACTURERS INSTRUCTIONS TO PROVIDE A WATER TIGHT SEAL.

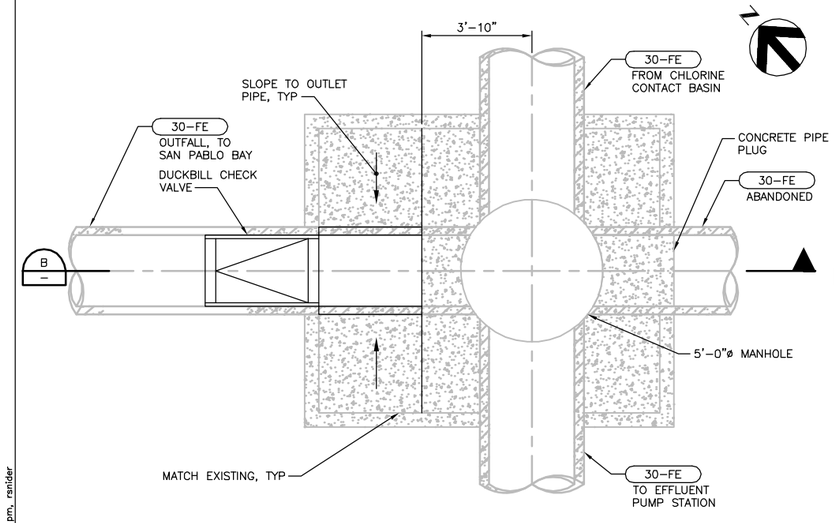

MODIFIED BOTTOM PLAN

3/8" = 1'–0"

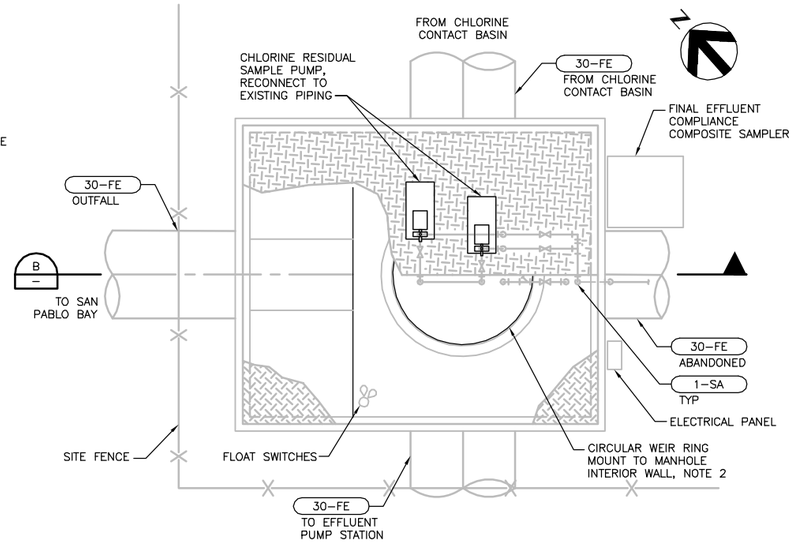

MODIFIED TOP PLAN

3/8" = 1'–0"

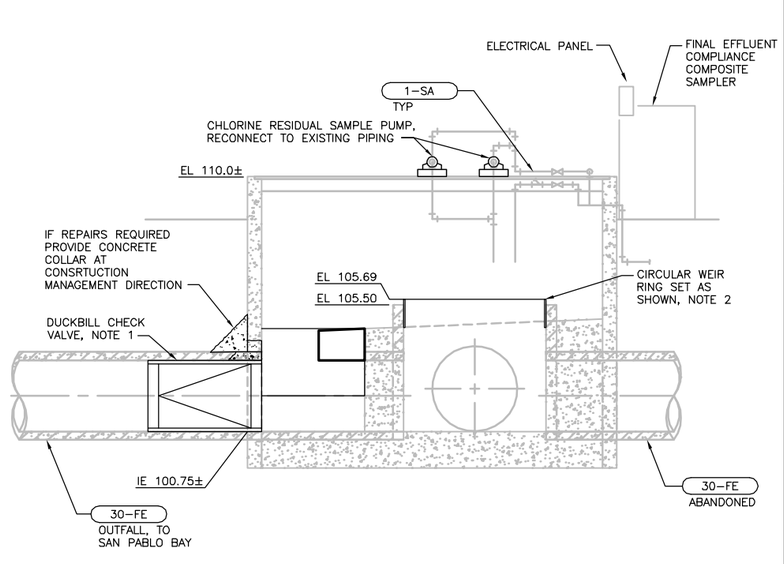

SECTION

3/8" = 1'–0"

FILE: 215786–73P101.dwg
DATE: Oct 06, 2015–4:24:21pm, rsnider

HDR Engineering, Inc.

ISSUE	DATE	DESCRIPTION
A	JUNE 2015	ISSUED FOR BID

PROJECT MANAGER	C. OLSON
DESIGNED	M. PERINPANAYAGAM
DESIGNED	
CHECKED	C. OLSON
DRAWN	M. FOYLE
DATE	JUNE 30, 2015
PROJECT NUMBER	215786

REGISTERED PROFESSIONAL ENGINEER MILANMAGAL PERINPANAYAGAM NO. 76120 EXP. 06/30/16 CIVIL STATE OF CALIFORNIA 6-30-15

CITY OF PINOLE CALIFORNIA 1903

PINOLE/HERCULES WATER POLLUTION CONTROL PLANT UPGRADE CLIENT PN

PROCESS

EXISTING EMERGENCY OUTFALL STRUCTURE MODIFICATIONS

0 1" 2"

FILENAME	215786–73P101
SCALE	AS NOTED

SHEET 73P101

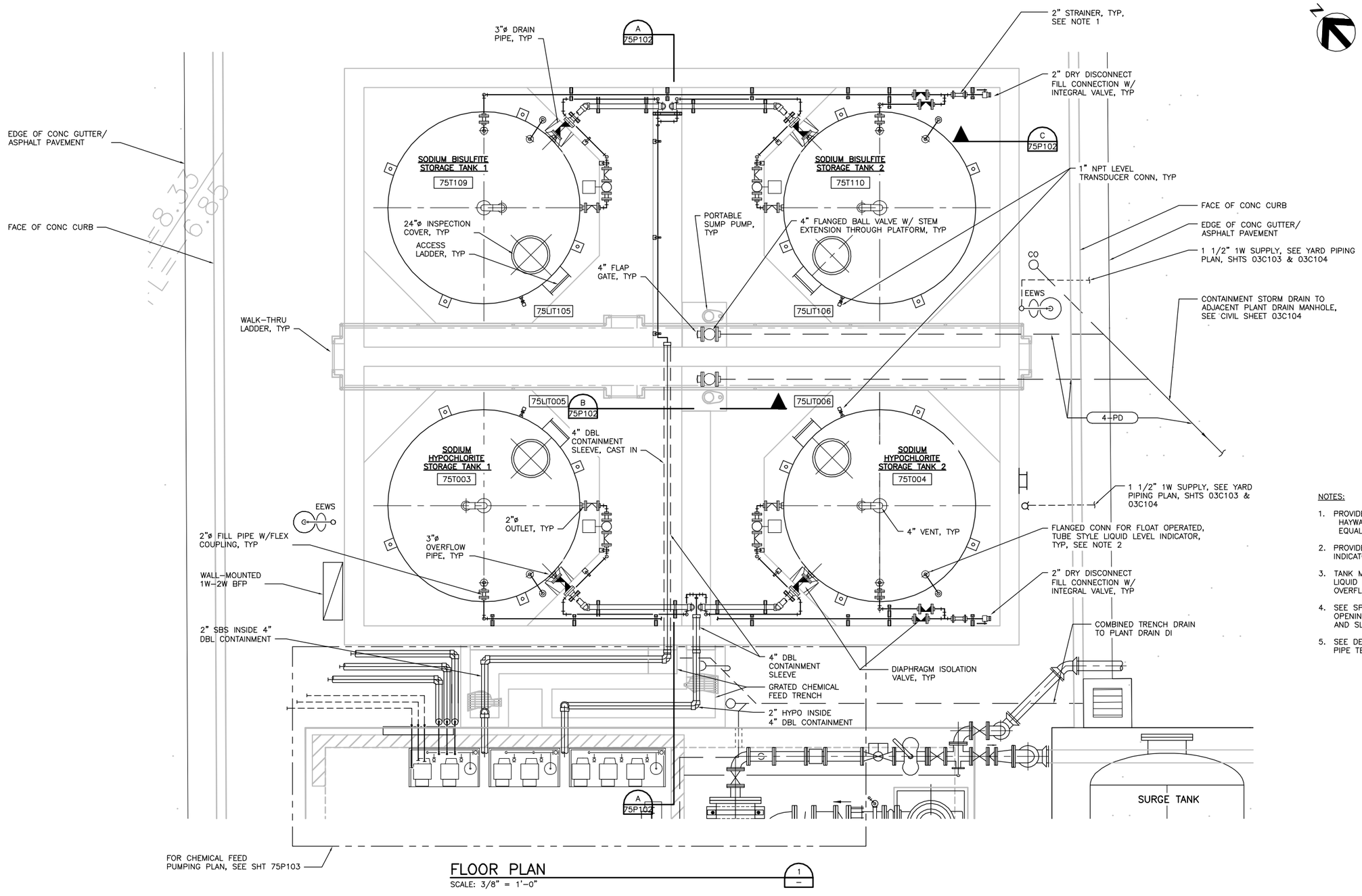

FLOOR PLAN

SCALE: 3/8" = 1'-0"

1

NOTES:

1. PROVIDE BASKET STRAINER: HAYWARD SB SERIES SIMPLEX BASKET STRAINER OR EQUAL, 2-INCH PVC AND INLINE CONNECTIONS.
2. PROVIDE FLOAT OPERATED, TUBE STYLE LIQUID LEVEL INDICATOR AT ALL CHEMICAL TANKS.
3. TANK MANUFACTURER TO PROVIDE SUPPORTS FOR LIQUID LEVEL INDICATOR TUBE, TANK FILL PIPE, TANK OVERFLOW, AND TANK LADDER.
4. SEE SPECIFICIATIONS SECTION 01800 FOR PIPE OPENINGS AND PENETRATIONS THROUGH WALL, FLOOR AND SLABS.
5. SEE DETAIL 2 ON SHEET 00P006 FOR CONTAINMENT PIPE TERMINATIONS.

FILE: 215786-75P101.dwg
DATE: Oct 06, 2015-4:24:35pm, rsnider

HDR Engineering, Inc.

ISSUE	DATE	DESCRIPTION
A	JUNE 2015	ISSUED FOR BID

PROJECT MANAGER	C. OLSON
DESIGNED	M. PERINPANAYAGAM
DESIGNED	
CHECKED	C. OLSON
DRAWN	P. VAN MEURS
DATE	JUNE 30, 2015
PROJECT NUMBER	215786

REGISTERED PROFESSIONAL ENGINEER
MALARMGAL PERINPANAYAGAM
NO. 76120
EXP. 06/30/16
CIVIL
STATE OF CALIFORNIA
06-30-15

CITY OF PINOLE CALIFORNIA 1903

PINOLE/HERCULES
WATER POLLUTION
CONTROL PLANT UPGRADE
CLIENT PN

PROCESS
CHEMICAL STORAGE
FLOOR PLAN

0 1" 2"

FILENAME	215786-75P101
SCALE	AS NOTED

SHEET **75P101**

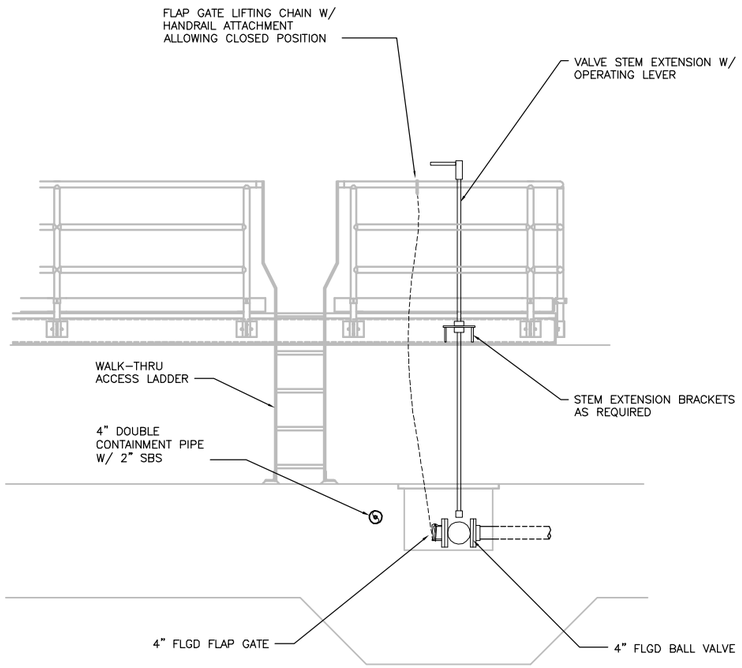

SECTION
SCALE: 1/2" = 1'-0"
B 75P101

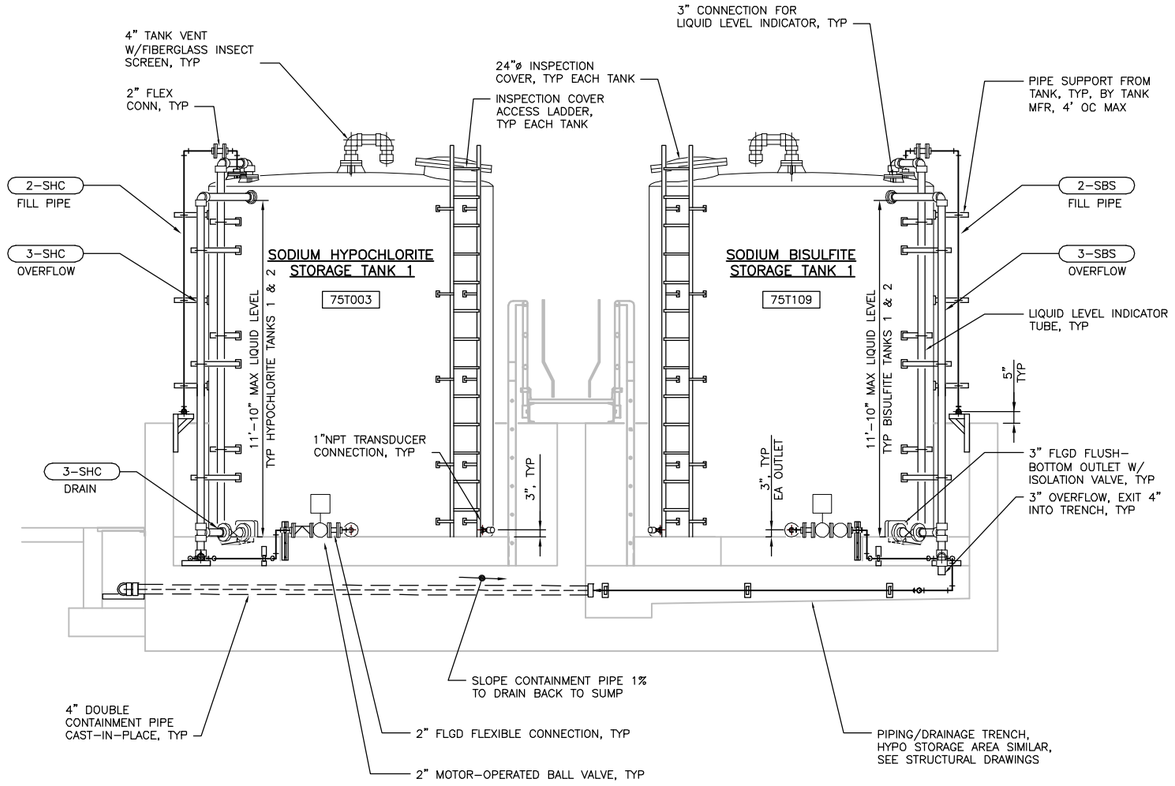

SECTION
SCALE: 3/8" = 1'-0"
A 75P101

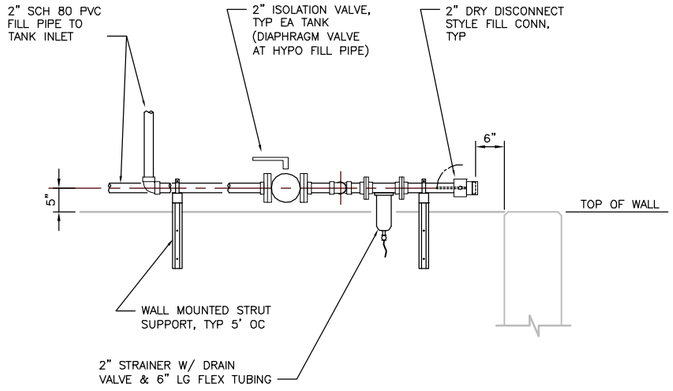

SECTION
SCALE: 3/4" = 1'-0"
C 75P101

NOTES:

1. SEE STRUCTURAL DRAWINGS 75S101 THROUGH 75S104 FOR TOP OF PAD & TOP OF WALL ELEVATIONS.
2. SEE DETAIL 2 ON SHEET 00P006 FOR CONTAINMENT PIPE TERMINATION.

FILE: 215786-75P102.dwg
DATE: Oct 06, 2015-4:24:43pm, rsnider

HDR Engineering, Inc.

ISSUE	DATE	DESCRIPTION
A	JUNE 2015	ISSUED FOR BID

PROJECT MANAGER	C. OLSON
DESIGNED	M. PERINPANAYAGAM
DESIGNED	
CHECKED	C. OLSON
DRAWN	P. VAN MEURS
DATE	JUNE 30, 2015
PROJECT NUMBER	215786

REGISTERED PROFESSIONAL ENGINEER
MALARMAGAL PERINPANAYAGAM
NO. 76120
EXP. 06/30/16
CIVIL
STATE OF CALIFORNIA
06-30-15

CITY OF PINOLE CALIFORNIA 1903

PINOLE/HERCULES
WATER POLLUTION
CONTROL PLANT UPGRADE
CLIENT PN

PROCESS

CHEMICAL STORAGE SECTIONS 1

0 1" 2"

FILENAME	215786-75P102
SCALE	AS NOTED

SHEET
75P102

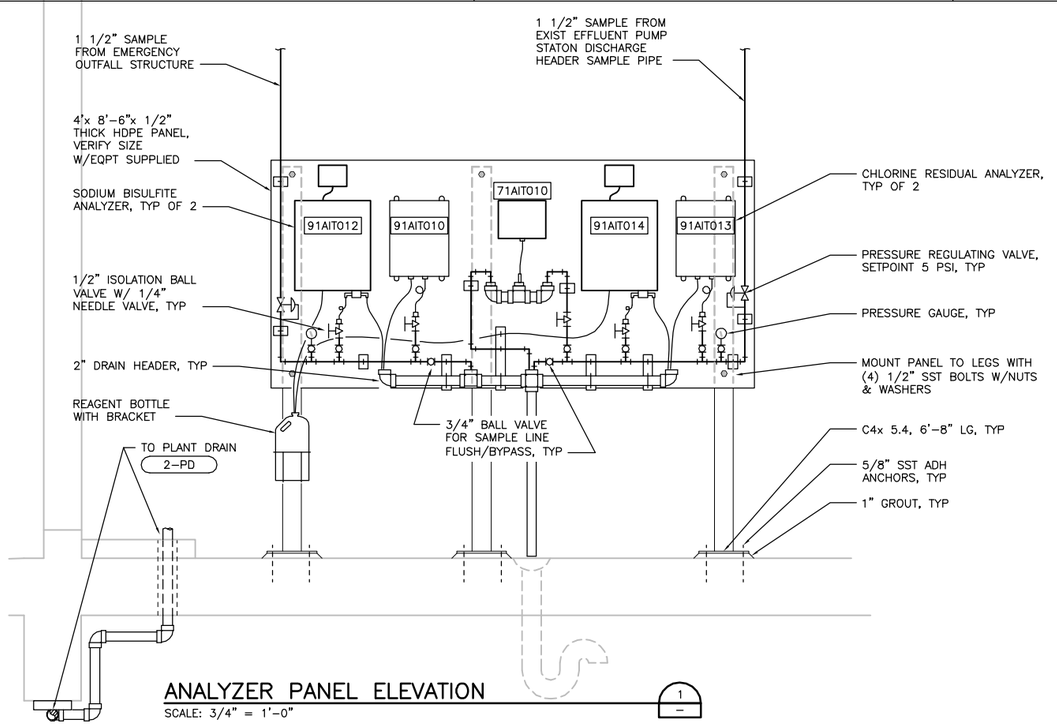

ANALYZER PANEL ELEVATION

SCALE: 3/4" = 1'-0"

1

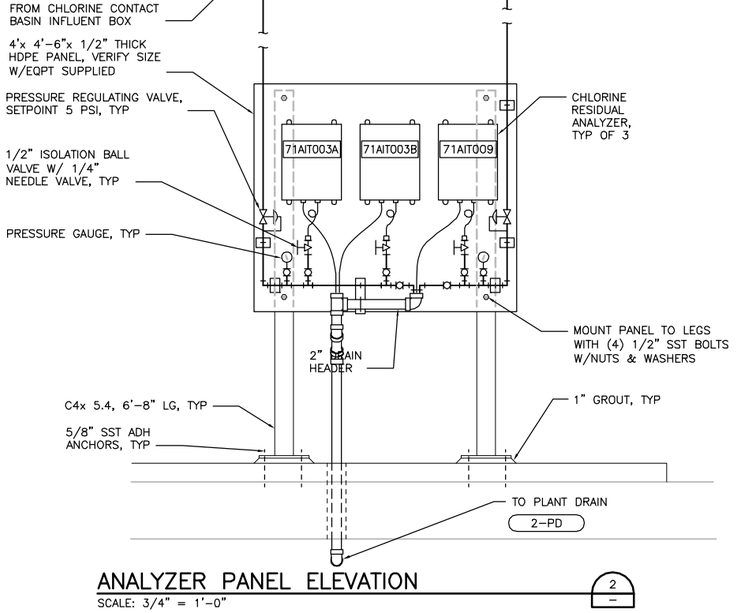

ANALYZER PANEL ELEVATION

SCALE: 3/4" = 1'-0"

2

NOTES:

1. PROVIDE WALL PENETRATIONS PER SECTION 01800.
2. SEE DETAIL 2 ON SHEET 00P006 FOR DOUBLE/SINGLE WALL PIPE TRANSITIONS.
3. RUN SAMPLE PIPES TO ANALYZERS AND SUPPORT FROM CEILING. SEE SECTION 15090 FOR PIPE SUPPORTS.
4. PROVIDE FLEXIBLE COUPLING OUTSIDE OF BUILDING ON PIPES THAT ENTER AND EXIT EXISTING BUILDING.
5. CHEMICAL CARRIER PIPE IN DOUBLE CONTAINMENT PIPE:
   A. 3/4-SHC TO RAS CHLORINATION
   B. 1-SHC TO PRIMARY EFFLUENT JUNCTION BOX INDUCTION UNIT.
   C. 1 1/2-SBS TO CHLORINE CONTACT BASIN EFFLUENT BOX.
6. ROUTE COMBINED DRAIN PIPES FROM ANALYZERS THROUGH FLOOR, EXITING WETWELL AT PENETRATION THROUGH NORTH WALL AND ROUTING TO STORM DRAIN STD DI8.
7. ALL METERING PUMPS ARE PACKAGED SKIDS BY MANUFACTURER. SEE SPECIFICATION SECTION 11932.
8. CHEMICAL PIPING LAYOUT AND DETAILS ARE NOT SHOWN. CONTRACTOR TO CONNECT CHEMICAL SUCTION/DISCHARGE PIPES TO METERING PUMPS AS SHOWN ON P&ID'S, AND PROVIDE CHEMICAL PIPING LAYOUT AND ELEVATION VIEWS FOR ENGINEER'S APPROVAL.
9. MOUNT METERING PUMP SKIDS TO EXISTING CONCRETE PAD. CONTRACTOR TO COORDINATE WITH METERING PUMP MANUFACTURER FOR SKID DIMENSIONS PRIOR TO ORDERING.
10. CONNECT BISULFITE METERING PUMP DISCHARGE TO EXISTING PIPE PER NOTE 3, SHEET 91D101

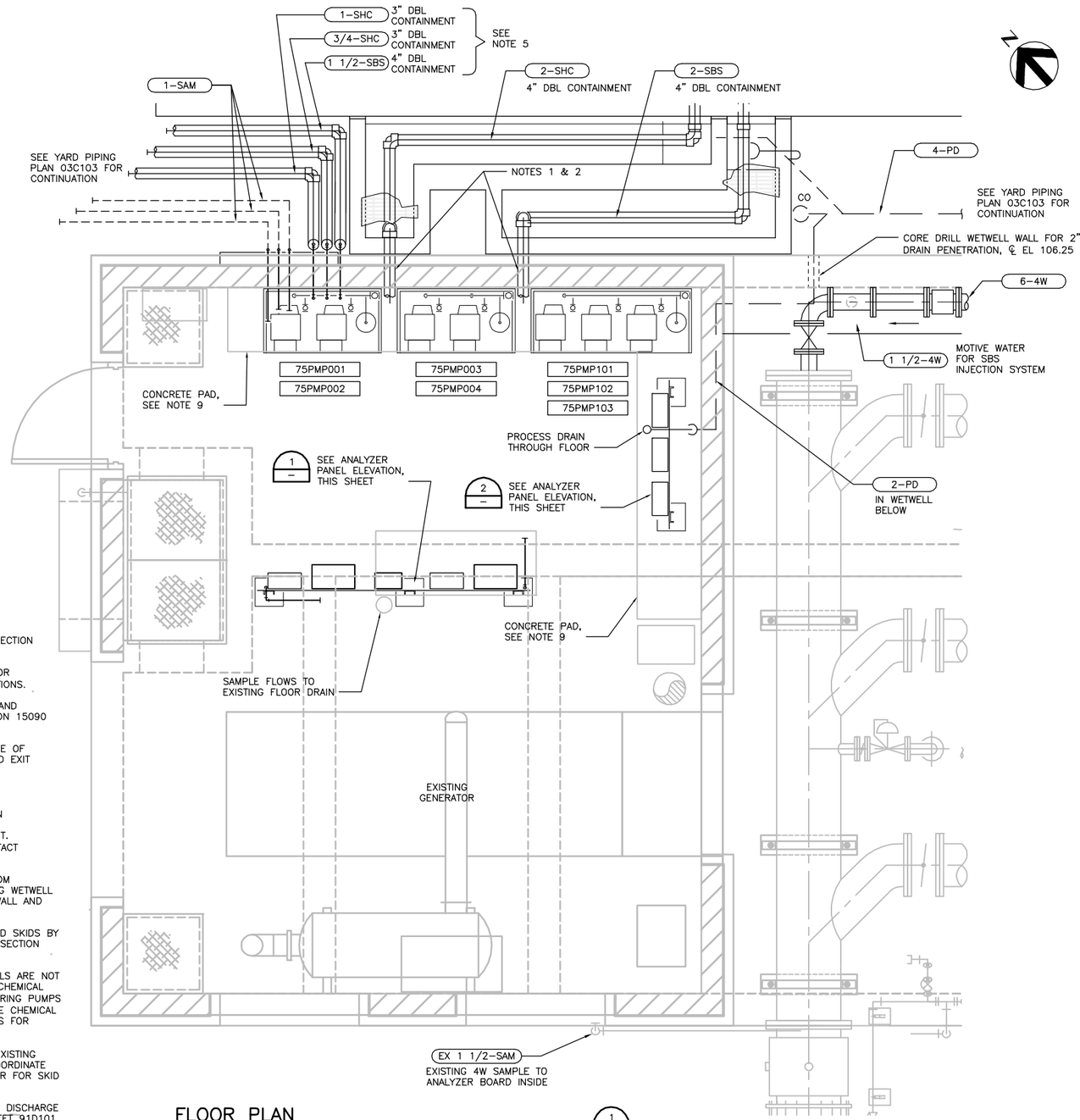

FLOOR PLAN

SCALE: 1/2" = 1'-0"

1

FILE: 215786-75P103.dwg
DATE: Oct 06, 2015-4:24:53pm, rainder

HDR Engineering, Inc.

ISSUE	DATE	DESCRIPTION
A	JUNE 2015	ISSUED FOR BID

PROJECT MANAGER	C. OLSON
DESIGNED	M. PERINPANAYAGAM
DESIGNED	
CHECKED	C. OLSON
DRAWN	P. VAN MEURS
DATE	JUNE 30, 2015
PROJECT NUMBER	215786

REGISTERED PROFESSIONAL ENGINEER
MUTHUKUMAR PERINPANAYAGAM
NO. 76120
EXP. 06/30/16
CIVIL
STATE OF CALIFORNIA
04-30-15

CITY OF PINOLE CALIFORNIA 1903

PINOLE/HERCULES
WATER POLLUTION
CONTROL PLANT UPGRADE
CLIENT PN

PROCESS
CHEMICAL FEED
PUMPING AND ANALYZER ROOM
PLAN AND ELEVATIONS

0 1" 2"

FILENAME	215786-75P103
SCALE	AS NOTED

SHEET
75P103

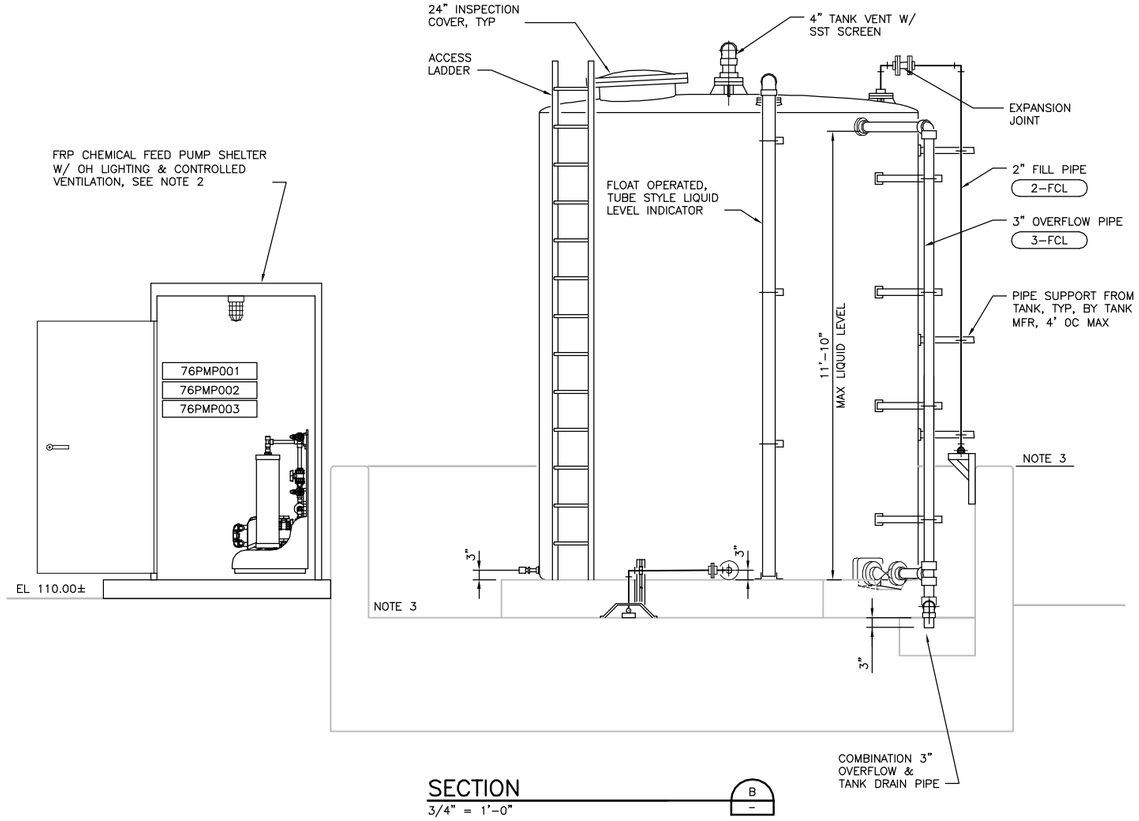

SECTION
3/4" = 1'-0"

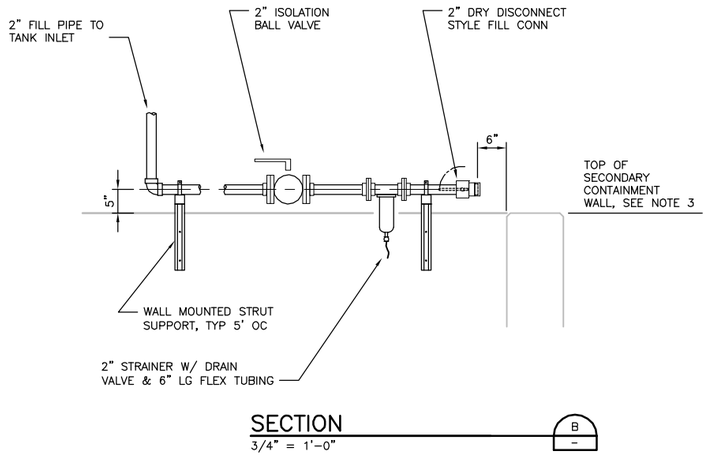

SECTION
3/4" = 1'-0"

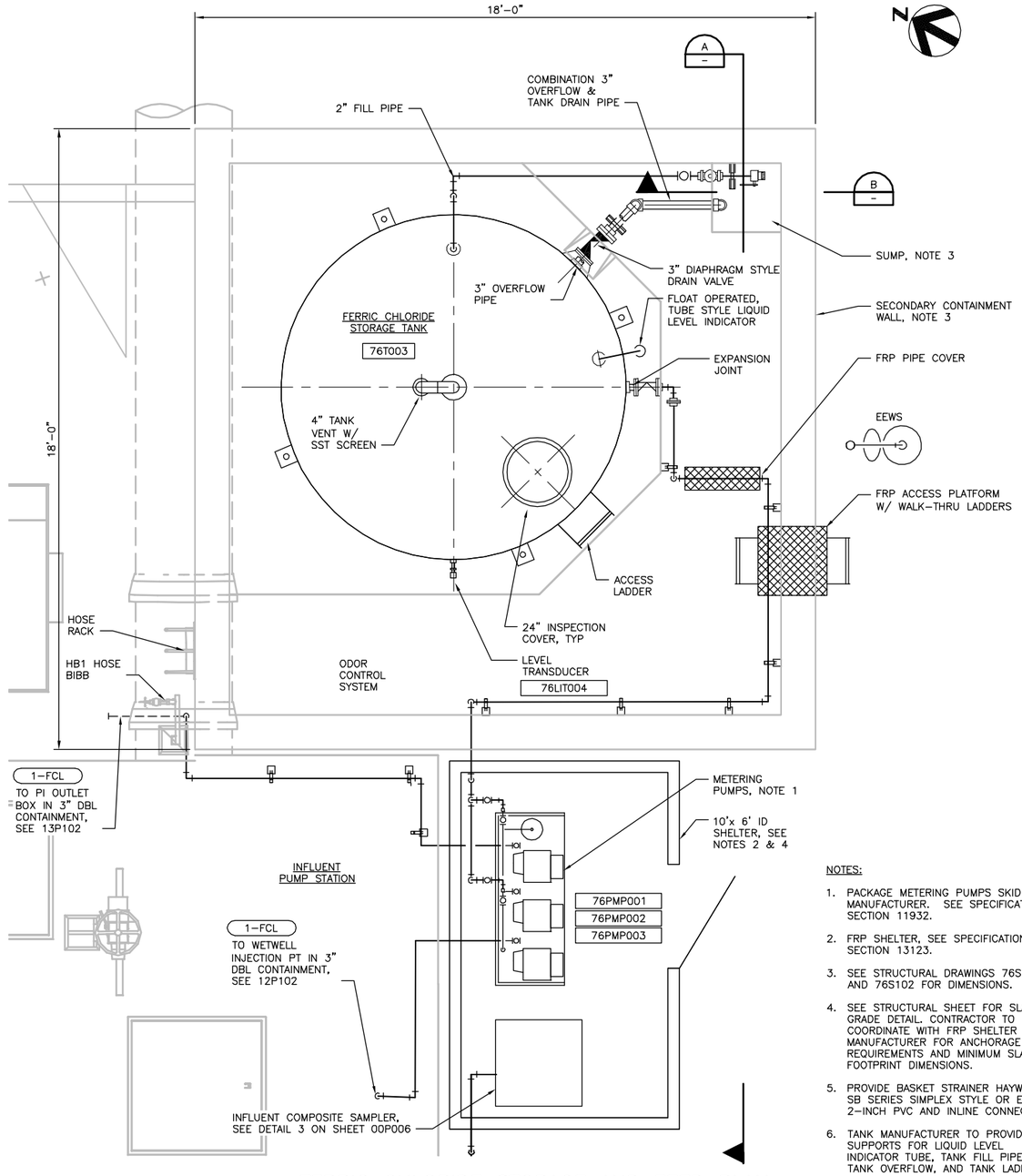

FERRIC CHLORIDE STORAGE AND FEED PLAN
1/2" = 1'-0"

NOTES:

1. PACKAGE METERING PUMPS SKID BY MANUFACTURER. SEE SPECIFICATIONS SECTION 11932.
2. FRP SHELTER, SEE SPECIFICATIONS SECTION 13123.
3. SEE STRUCTURAL DRAWINGS 76S101 AND 76S102 FOR DIMENSIONS.
4. SEE STRUCTURAL SHEET FOR SLAB ON GRADE DETAIL. CONTRACTOR TO COORDINATE WITH FRP SHELTER MANUFACTURER FOR ANCHORAGE REQUIREMENTS AND MINIMUM SLAB FOOTPRINT DIMENSIONS.
5. PROVIDE BASKET STRAINER HAYWARD SB SERIES SIMPLEX STYLE OR EQUAL, 2-INCH PVC AND INLINE CONNECTION.
6. TANK MANUFACTURER TO PROVIDE SUPPORTS FOR LIQUID LEVEL INDICATOR TUBE, TANK FILL PIPE, TANK OVERFLOW, AND TANK LADDER.
7. SEE DETAIL 2 ON SHEET 00P006 FOR CONTAINMENT PIPE TERMINATION.

FILE: 215786-76P101.dwg
DATE: Oct 06, 2015-4:25:07pm, rsnider

HDR Engineering, Inc.

ISSUE	DATE	DESCRIPTION
A	JUNE 2015	ISSUED FOR BID

PROJECT MANAGER	C. OLSON
DESIGNED	M. PERINPANAYAGAM
DESIGNED	
CHECKED	C. OLSON
DRAWN	P. VAN MEURS
DATE	JUNE 30, 2015
PROJECT NUMBER	215786

REGISTERED PROFESSIONAL ENGINEER
MALARMAGAL PERINPANAYAGAM
NO. 76120
EXP. 06/30/16
CIVIL
STATE OF CALIFORNIA
06-30-15

CITY OF PINOLE CALIFORNIA 1903

PINOLE/HERCULES
WATER POLLUTION
CONTROL PLANT UPGRADE
CLIENT PN

PROCESS

FERRIC CHLORIDE CHEMICAL STORAGE AND FEED PLAN

0 1" 2"

FILENAME	215786-76P101
SCALE	AS NOTED

SHEET
76P101

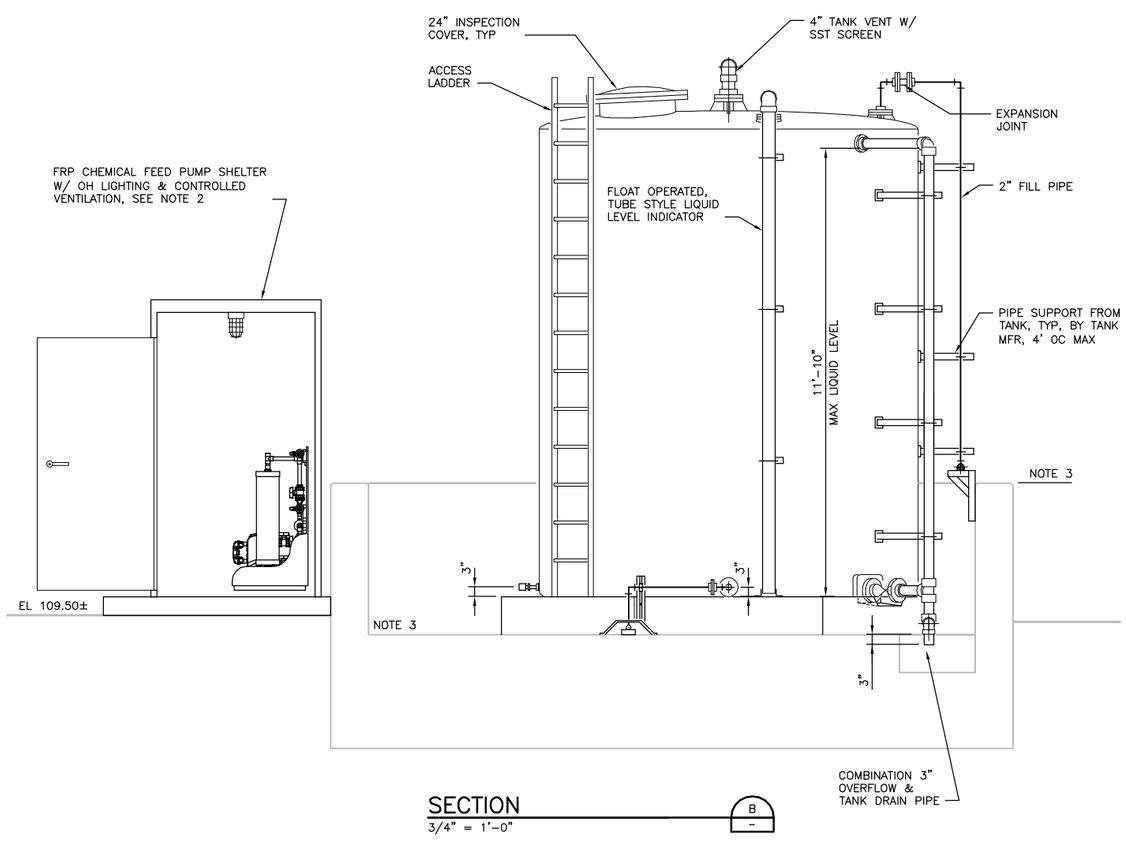

SECTION
3/4" = 1'-0"

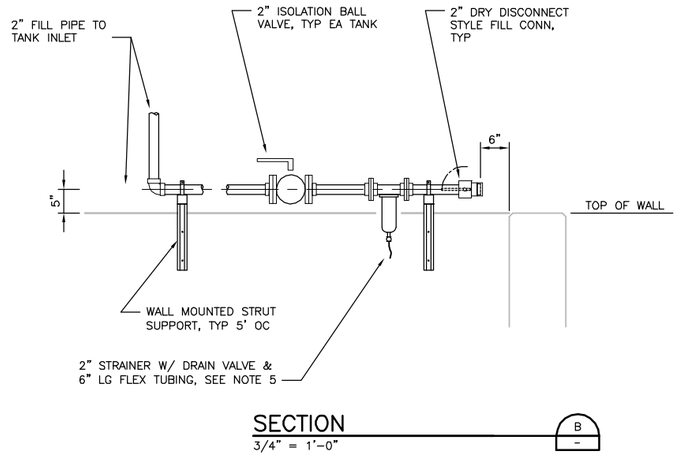

SECTION
3/4" = 1'-0"

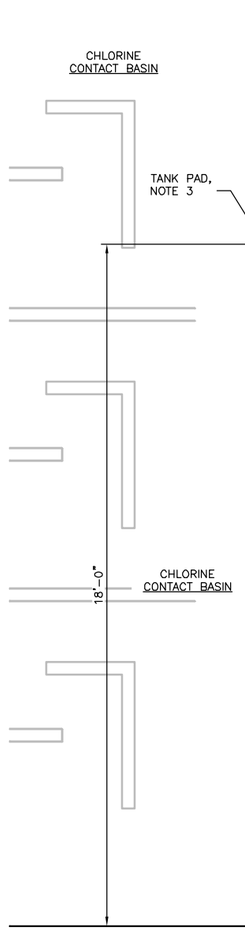

NOTES:

1. PACKAGE METERING PUMPS SKID BY MANUFACTURER. SEE SPECIFICATIONS SECTION 11932.
2. FRP SHELTER, SEE SPECIFICATIONS SECTION 13123.
3. SEE STRUCTURAL DRAWINGS 77S101 AND 77S102 FOR DIMENSIONS.
4. SEE STRUCTURAL SHEET FOR SLAB ON GRADE DETAIL. CONTRACTOR TO COORDINATE WITH FRP SHELTER MANUFACTURER FOR ANCHORAGE REQUIREMENTS AND MINIMUM SLAB FOOTPRINT DIMENSIONS.
5. PROVIDE BASKET STRAINER HAYWARD SB SERIES SIMPLEX STYLE OR EQUAL, 2-INCH PVC AND INLINE CONNECTION.
6. TANK MANUFACTURER TO PROVIDE SUPPORTS FOR LIQUID LEVEL INDICATOR TUBE, TANK FILL PIPE, TANK OVERFLOW, AND TANK LADDER.
7. SEE DETAIL 2 ON SHEET 00P006 FOR CONTAINMENT PIPE TERMINATION.

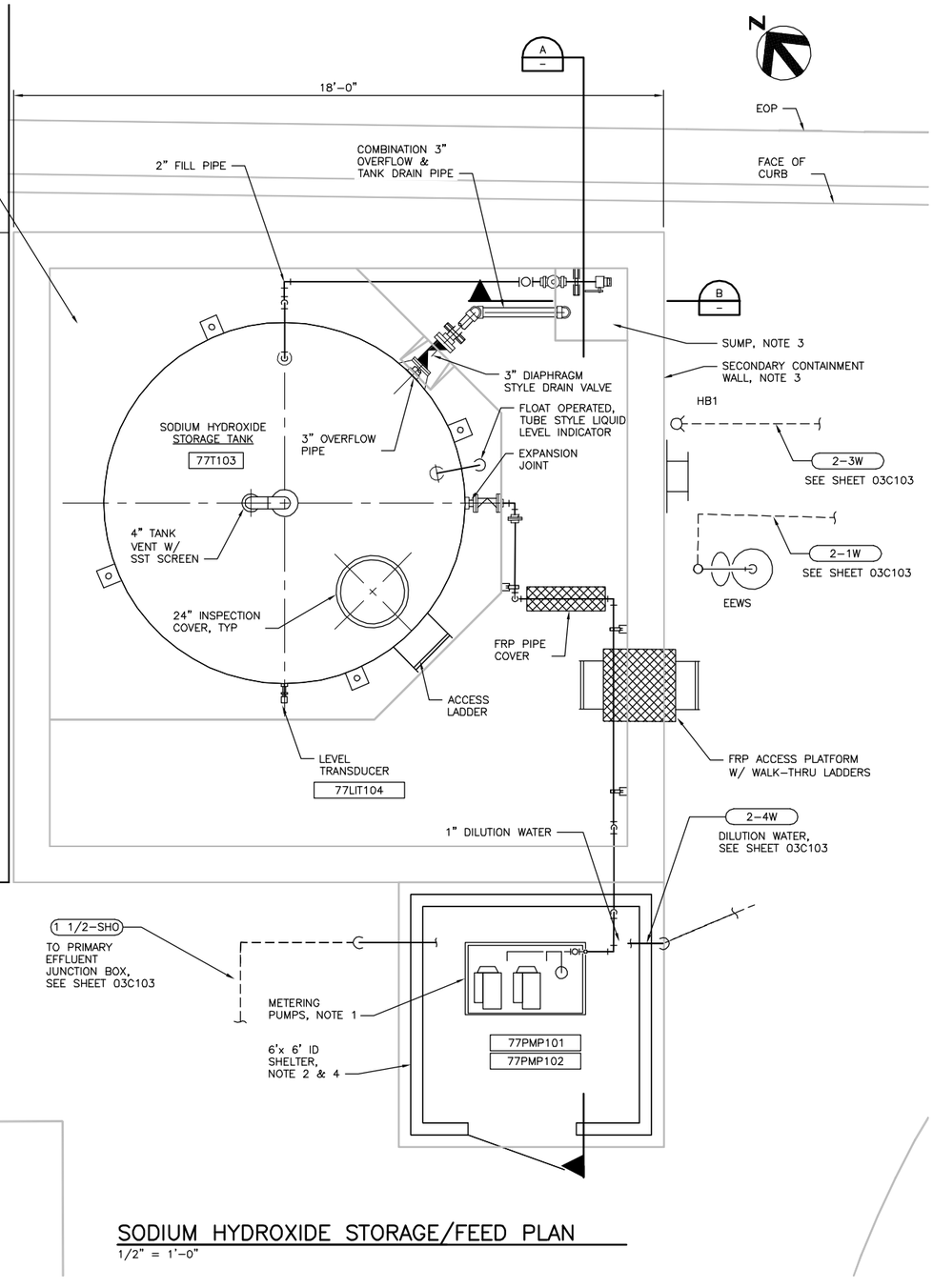

SODIUM HYDROXIDE STORAGE/FEED PLAN
1/2" = 1'-0"

FILE: 215786-77P101.dwg
DATE: Oct 06, 2015-4:25:22pm, rsnider

HDR Engineering, Inc.

ISSUE	DATE	DESCRIPTION
A	JUNE 2015	ISSUED FOR BID

PROJECT MANAGER	C. OLSON
DESIGNED	M. PERINPANAYAGAM
DESIGNED	
CHECKED	C. OLSON
DRAWN	P. VAN MEURS
DATE	JUNE 30, 2015
PROJECT NUMBER	215786

REGISTERED PROFESSIONAL ENGINEER
CRAIG A. OLSON
NO. 39819
EXP. 12/31/15
CIVIL
STATE OF CALIFORNIA
06-30-15

CITY OF PINOLE CALIFORNIA 1903

PINOLE/HERCULES
WATER POLLUTION
CONTROL PLANT UPGRADE
CLIENT PN

PROCESS

SODIUM HYDROXIDE CHEMICAL STORAGE AND FEED PLAN

0 1" 2"

FILENAME	215786-77P101
SCALE	AS NOTED

SHEET
77P101

NOTES:

1. ABOVE GROUND PIPING, EQUIPMENT AND ELECTRICAL PORTIONS OF DIGESTER GAS BURNER SYSTEM ARE RELOCATED FROM EXISTING LOCATION, SEE SHEET 85D101. REFER TO CONTRACTOR GENERATED AS–BUILT OF EXISTING SYSTEM (PRIOR TO DISASSEMBLY) AND SHEET 85S101, 85E101 AND 85I101 FOR COMPLETE ASSEMBLY. SYSTEM TO BE REASSEMBLED AND WIRED TO FUNCTION AS IT WAS PRIOR TO DISASSEMBLY.
2. REPLACE GASKETS ON ALL FLANGED CONNECTIONS DISASSEMBLED FOR RELOCATION.

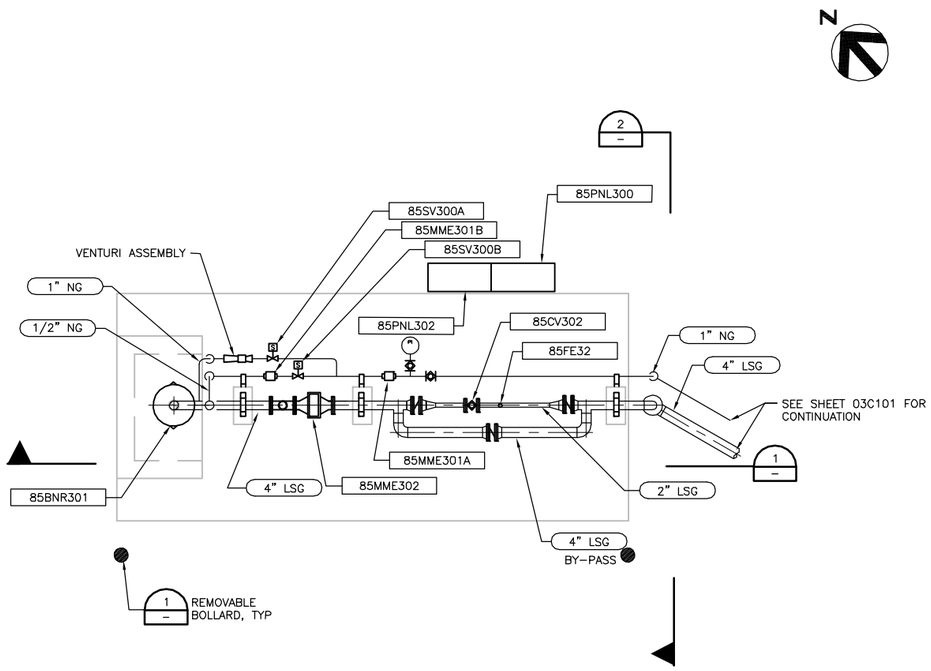

RELOCATED DIGESTER GAS BURNER PLAN

3/8" = 1'–0"

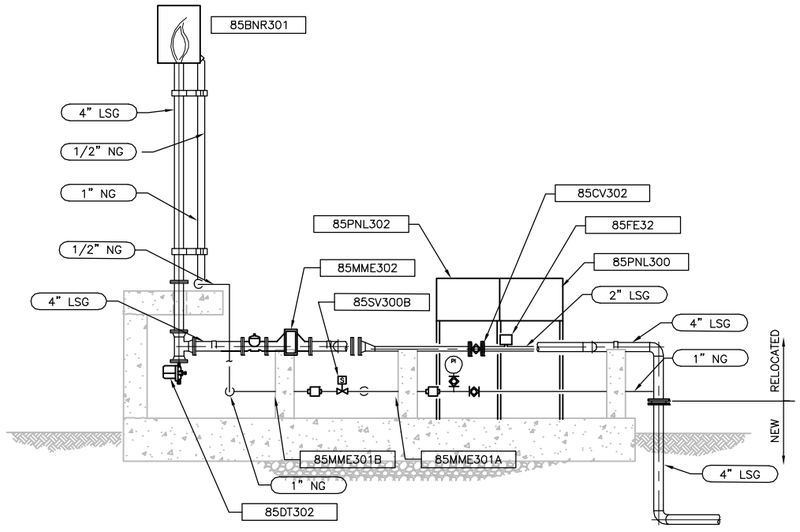

SECTION 1

3/8" = 1'–0"

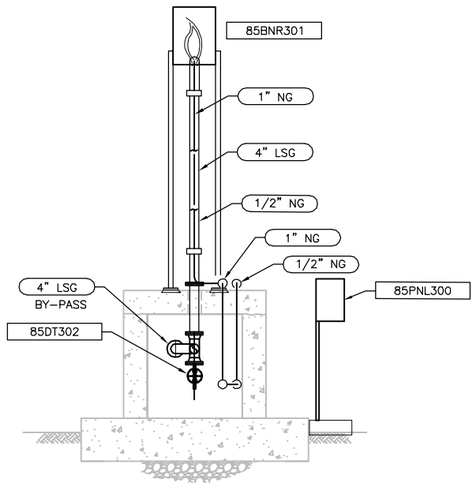

SECTION 2

3/8" = 1'–0"

FILE: 215786–85P101.dwg
DATE: Oct 06, 2015–4:25:29pm, ranider

HDR Engineering, Inc.

ISSUE	DATE	DESCRIPTION
A	JUNE 2015	ISSUED FOR BID

PROJECT MANAGER	C. OLSON
DESIGNED	T. KONTONICKAS
DESIGNED	
CHECKED	C. OLSON
DRAWN	E. SESPENE
DATE	JUNE 30, 2015
PROJECT NUMBER	215786

REGISTERED PROFESSIONAL ENGINEER
THEODORE H. KONTONICKAS
NO. 29378
EXP. 06/30/17
MECHANICAL
STATE OF CALIFORNIA

CITY OF PINOLE CALIFORNIA 1903

PINOLE/HERCULES
WATER POLLUTION
CONTROL PLANT UPGRADE
CLIENT PN

PROCESS

DIGESTER GAS BURNER PLAN AND SECTIONS

0 1" 2"

FILENAME	215786–85P101
SCALE	AS NOTED

SHEET **85P101**

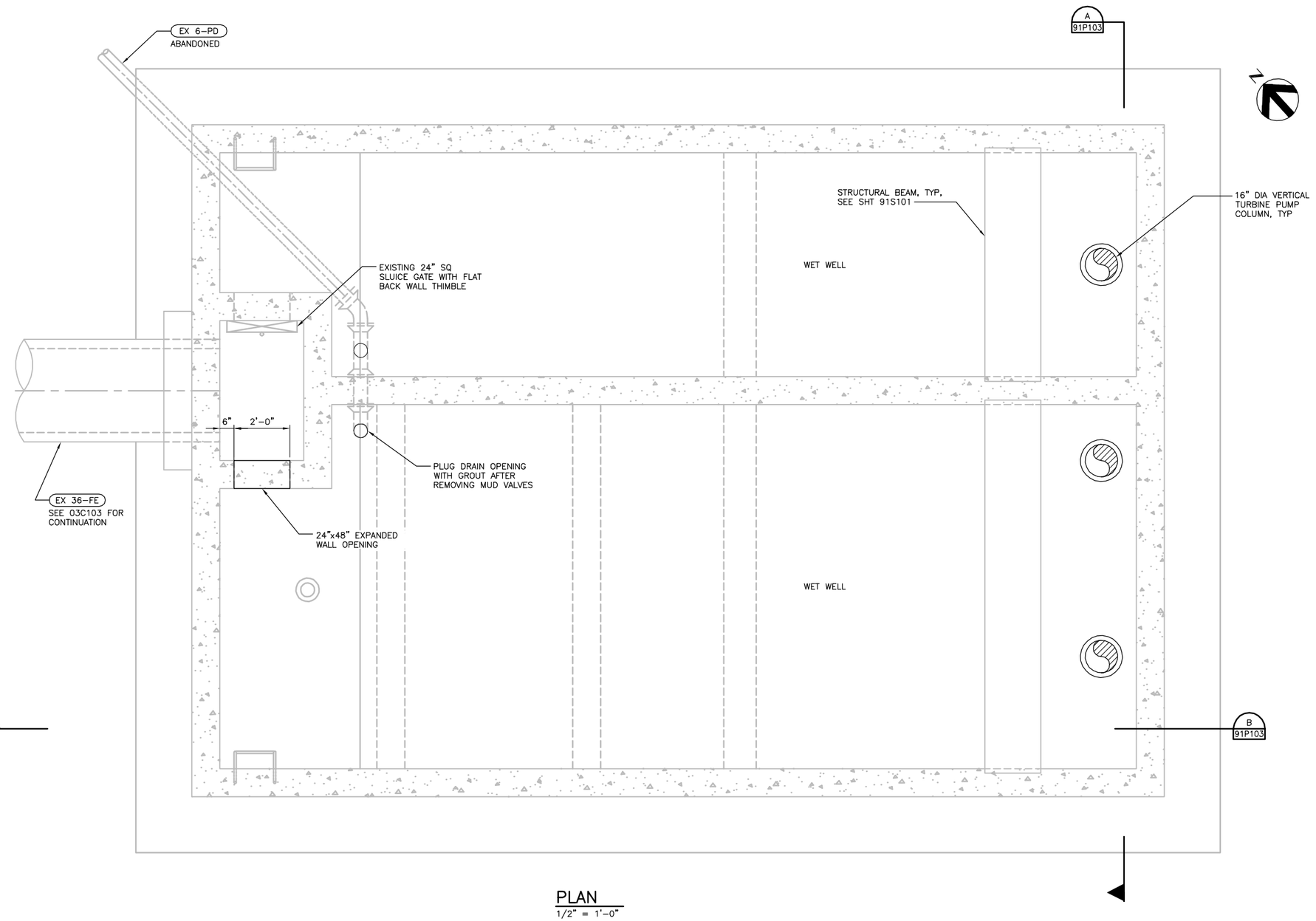

PLAN
1/2" = 1'–0"

FILE: 215786–91P101.dwg
DATE: Oct 06, 2015–4:25:35pm, ranider

HDR Engineering, Inc.

ISSUE	DATE	DESCRIPTION
A	JUNE 2015	ISSUED FOR BID

PROJECT MANAGER	C. OLSON
DESIGNED	M. BECK
DESIGNED	
CHECKED	D. HUNT
DRAWN	M. FOYLE
DATE	JUNE 30, 2015
PROJECT NUMBER	215786

REGISTERED PROFESSIONAL ENGINEER
MARSHALL W. BECK
NO. 73193
EXP. 12/31/16
CIVIL
STATE OF CALIFORNIA
06-30-15

CITY OF PINOLE CALIFORNIA 1903

PINOLE/HERCULES
WATER POLLUTION
CONTROL PLANT UPGRADE
CLIENT PN

PROCESS

EXISTING EFFLUENT PUMPING STATION
LOWER LEVEL MODIFICATIONS PLAN

0 1" 2"

FILENAME	215786–91P101
SCALE	AS NOTED

SHEET
91P101

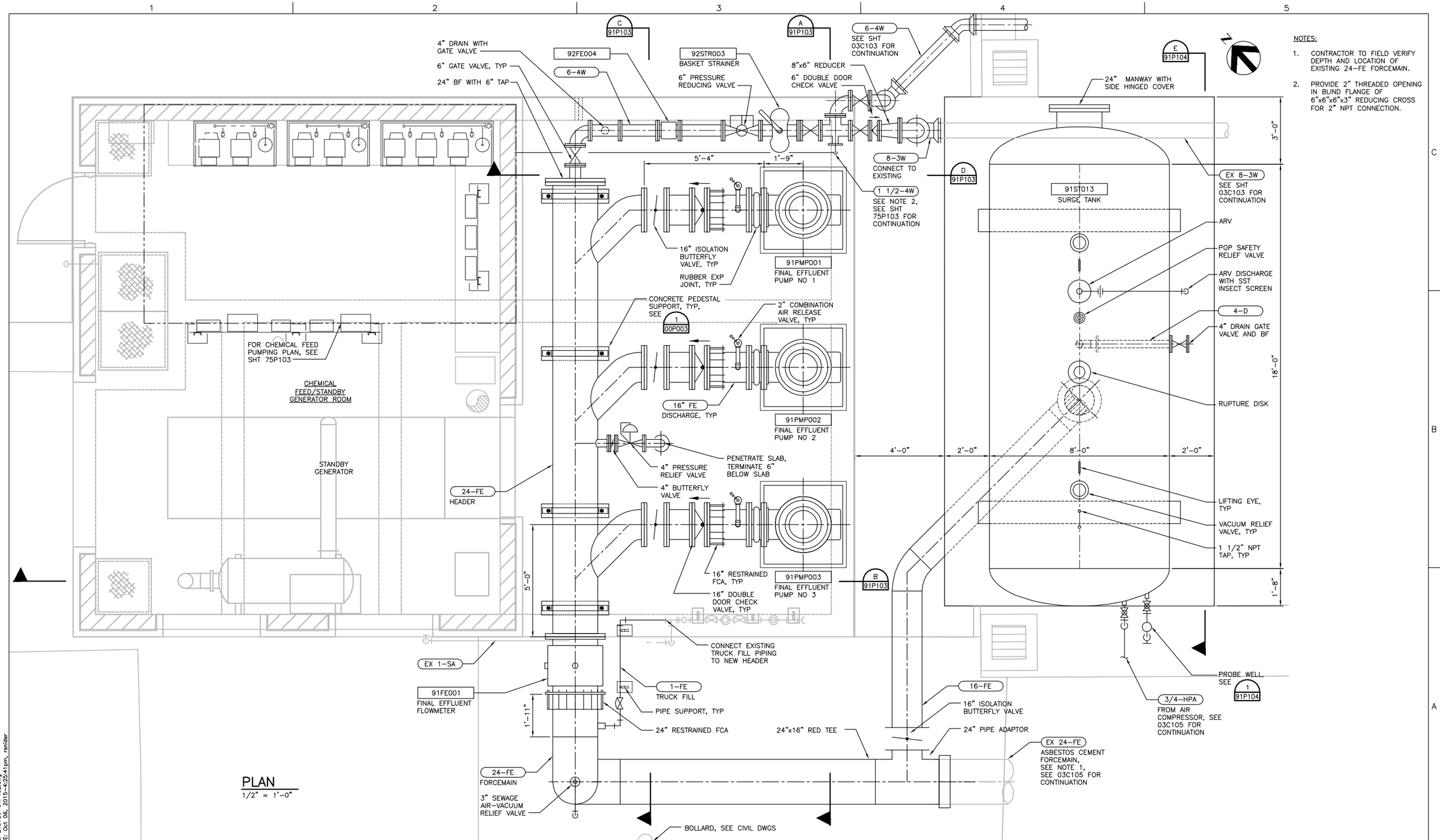

NOTES:

1. CONTRACTOR TO FIELD VERIFY DEPTH AND LOCATION OF EXISTING 24-FE FORCEMAIN.
2. PROVIDE 2" THREADED OPENING IN BLIND FLANGE OF 6"x6"x6"x3" REDUCING CROSS FOR 2" NPT CONNECTION.

PLAN
1/2" = 1'-0"

FILE: 215786-91P102.dwg
DATE: Oct 06, 2015-4:25:41pm, rsnider

HDR Engineering, Inc.

ISSUE	DATE	DESCRIPTION
A	JUNE 2015	ISSUED FOR BID

PROJECT MANAGER	C. OLSON
DESIGNED	M.BECK
DESIGNED	
CHECKED	D. HUNT
DRAWN	M. FOYLE
DATE	JUNE 30, 2015
PROJECT NUMBER	215786

REGISTERED PROFESSIONAL ENGINEER JASON W. BECK NO. 73193 EXP. 12/31/16 CIVIL STATE OF CALIFORNIA 06-30-15

CITY OF PINOLE CALIFORNIA 1903

PINOLE/HERCULES
WATER POLLUTION
CONTROL PLANT UPGRADE
CLIENT PN

PROCESS

EXISTING EFFLUENT PUMPING STATION UPPER LEVEL MODIFICATIONS PLAN

0 1" 2"

FILENAME	215786-91P102
SCALE	AS NOTED

SHEET 91P102

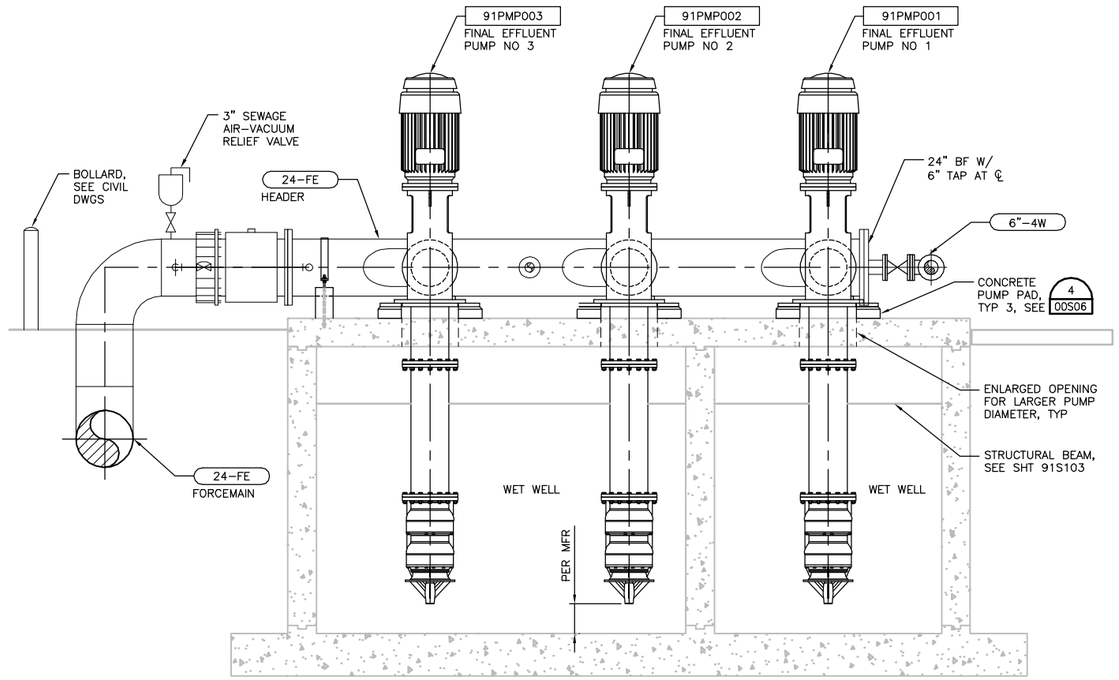

SECTION
3/8" = 1'-0"
A 91P101

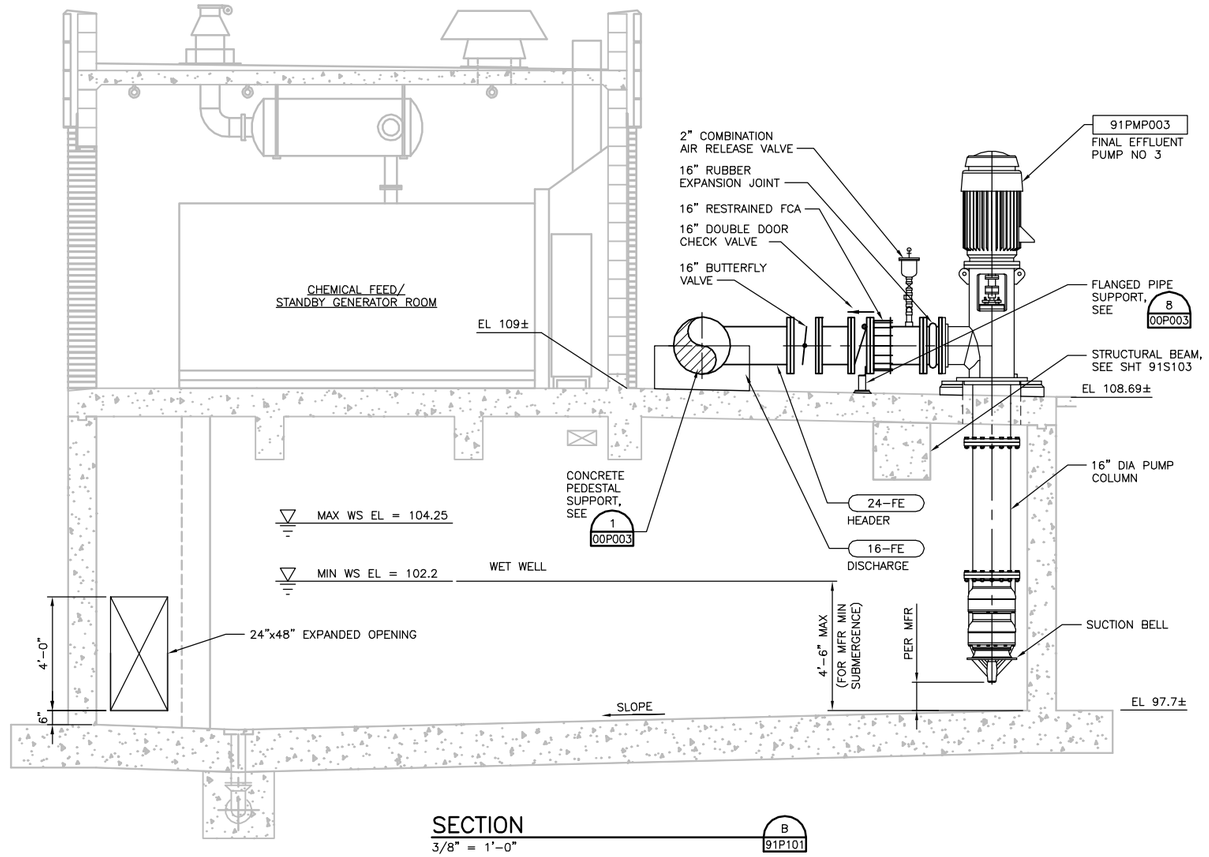

SECTION
3/8" = 1'-0"
B 91P101

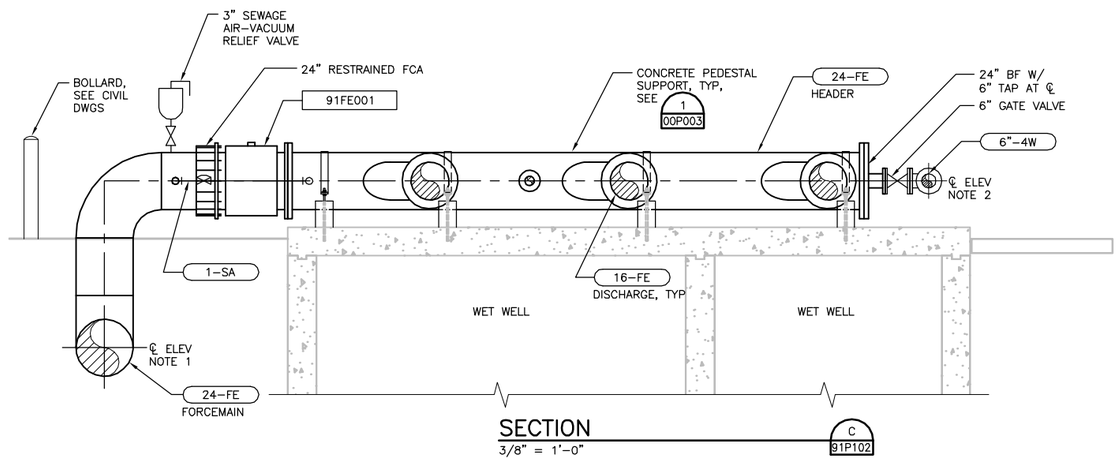

SECTION
3/8" = 1'-0"
C 91P102

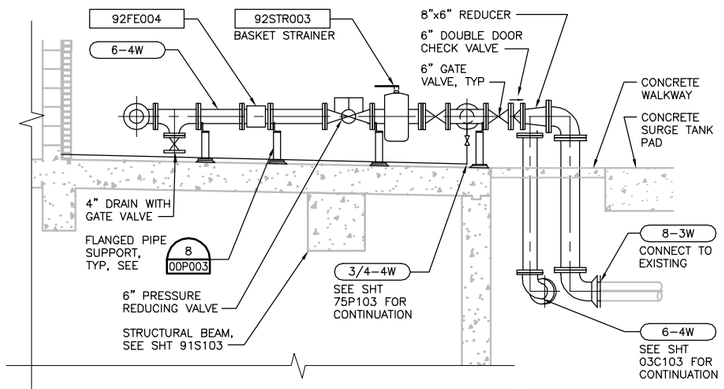

SECTION
3/8" = 1'-0"
D 91P102

NOTES:

1. CONTRACTOR SHALL POTHOLE TO FIELD VERIFY DEPTH AND DEPTH OF EXISTING 24-FE FORCEMAIN.
2. FIELD VERIFY CENTERLINE ELEVATION

FILE: 215786-91P103.dwg
DATE: Oct 06, 2015--4:25:47pm, rsnider

HDR Engineering, Inc.

ISSUE	DATE	DESCRIPTION
A	JUNE 2015	ISSUED FOR BID

PROJECT MANAGER	C. OLSON
DESIGNED	M. BECK
DESIGNED	
CHECKED	D. HUNT
DRAWN	M. FOYLE
DATE	JUNE 30, 2015
PROJECT NUMBER	215786

REGISTERED PROFESSIONAL ENGINEER
MASON W. BECK
NO. 73193
EXP. 12/31/16
CIVIL
STATE OF CALIFORNIA
06-30-15

CITY OF PINOLE CALIFORNIA 1903

PINOLE/HERCULES
WATER POLLUTION
CONTROL PLANT UPGRADE
CLIENT PN

PROCESS

EXISTING EFFLUENT PUMPING STATION SECTIONS

0 1" 2"

FILENAME	215786-91P103
SCALE	AS NOTED

SHEET
91P103

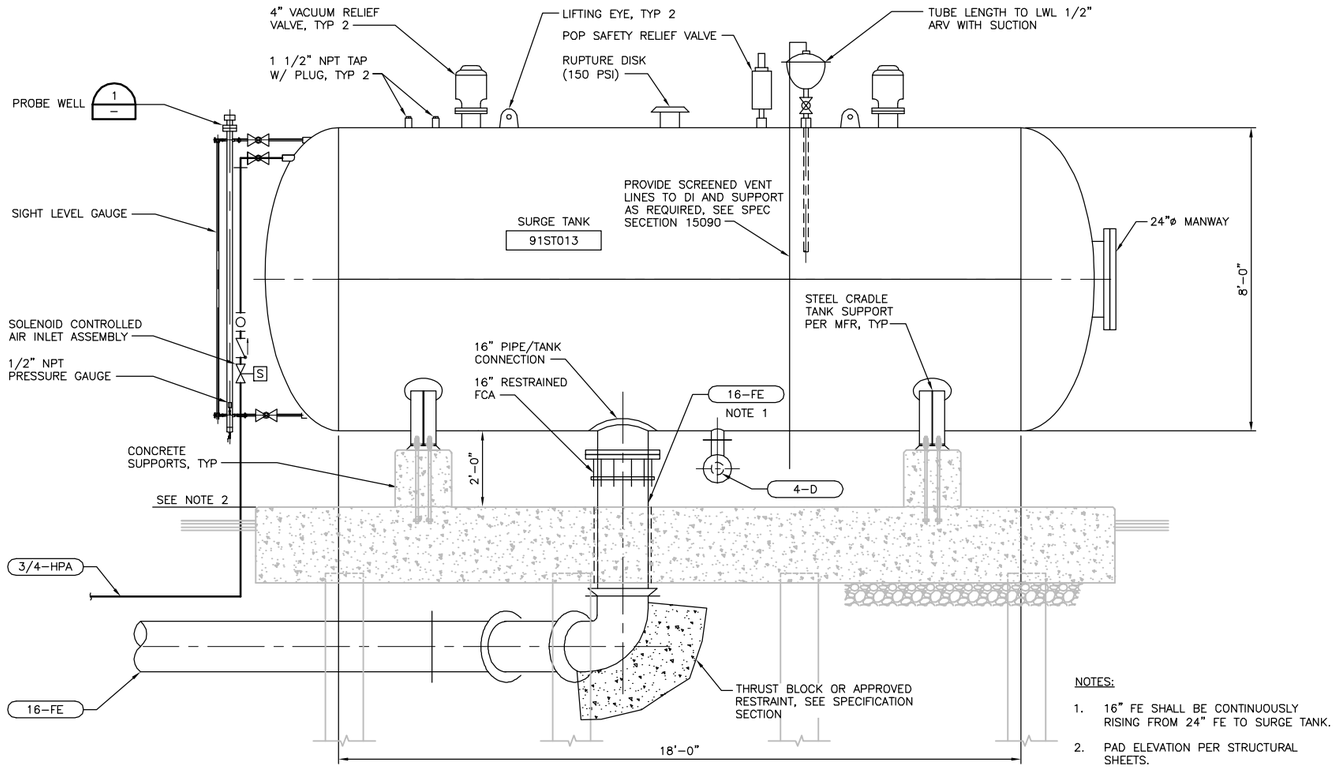

NOTES:

1. 16" FE SHALL BE CONTINUOUSLY RISING FROM 24" FE TO SURGE TANK.
2. PAD ELEVATION PER STRUCTURAL SHEETS.

SECTION
1/2" = 1'-0"
E
91P102

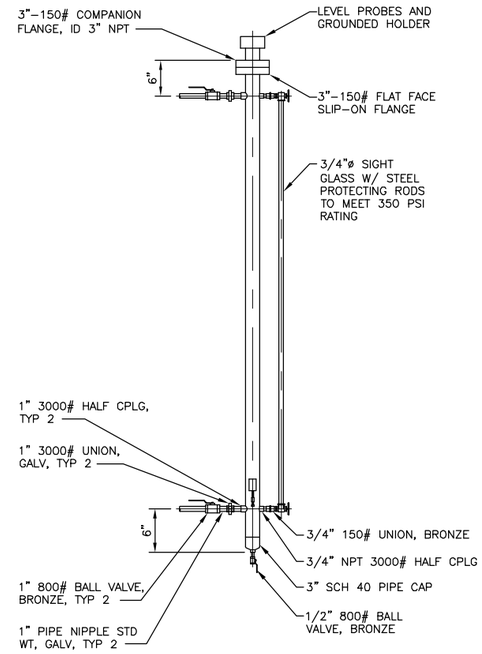

PROBE WELL DETAIL
3/4" = 1'-0"
1

FILE: 215786-91P104.dwg
DATE: Oct 06, 2015-4:25:53pm, ranider

HDR Engineering, Inc.

ISSUE	DATE	DESCRIPTION
A	JUNE 2015	ISSUED FOR BID

PROJECT MANAGER	C. OLSON
DESIGNED	M. BECK
DESIGNED	
CHECKED	C. OLSON
DRAWN	M. FOYLE
DATE	JUNE 30, 2015
PROJECT NUMBER	215786

REGISTERED PROFESSIONAL ENGINEER
JASON W. BECK
NO. 73193
EXP. 12/31/16
CIVIL
STATE OF CALIFORNIA
06-30-15

CITY OF PINOLE CALIFORNIA 1903

PINOLE/HERCULES
WATER POLLUTION
CONTROL PLANT UPGRADE
CLIENT PN

PROCESS

SURGE TANK SECTIONS AND DETAILS

0 1" 2"

FILENAME	215786-91P104
SCALE	AS NOTED

SHEET
91P104

PACKAGED DX COOLING ONLY AC UNIT SCHEDULE

SYMBOL	MANUFACTURER & MODEL #	SUPPLY CFM	EXTERNAL STATIC PRESSURE IN WC	VOLTAGE	EER	TOTAL/SENSIBLE CAPACITY (MBTUH) @ 67°F EA WB & 85°F EA DB	AMBIENT TEMP (°F)	BHP	COMPRESSOR CIR1 RLA /CIR 2 RLA	OFM (EA) WATTS/FLA	IFM FLA	MCA	WEIGHT (LBS.)	REMARKS
14ACU101	CARRIER 50HC-D09C1 OR EQUAL	2,975	1.0	460/3	12.2	106.9/93.4	85	1.22	6.2/6.2	325/0.8	3.8	22	900	PROVIDE ANTI-CORROSION COATING ON OUTDOOR COILS, UNIT CASING, AND ALL INTERNALS. PROVIDE UNIT WITH 2 STAGE COOLING WITH 2 SPEED INDOOR FAN MOTOR, DRY BULB ECONOMIZER WITH POWER EXHAUST WITH BAROMETRIC RELIEF, ECONOMIZER HOOD, SUPPLY AIR SMOKE DETECTOR, DISCONNECT, MOTORIZED 2 POSITION DAMPER, WINTER START KIT, SINGLE POINT ELECTRICAL CONNECTION, STANDARD 30% FILTER.

SUPPLY FAN SCHEDULE

SYMBOL	MANUFACTURER & MODEL #	CFM	EXTERNAL STATIC PRESSURE IN. W.C.	VOLTAGE	HP	FAN RPM	SONES	WEIGHT (LBS.)	REMARKS
61F101	LOREN COOK 30 SEP OR EQUAL	2,000	0.25	120/1/60	1/3	570	7.2	220	DISCONNECT SWITCH

WALL LOUVER SCHEDULE

SYMBOL	MANUFACTURER & MODEL #	CFM	DIMENSION (W) x (H)	MAX PRESSURE DROP IN WC	MINIMUM FREE AREA	MAXIMUM VELOCITY (FPM)	REMARKS
WL-1	RUSKIN ELF375DX OR EQUAL	2,400	72x28	0.06	5.43	500	54% FREE AREA. PROVIDE LOUVER WITH BIRD SCREEN AND MOTORIZED DAMPER. COORDINATE COLOR WITH ARCHITECTURAL.

SUPPLY/RETURN GRILLE SCHEDULE

SYMBOL	MANUFACTURER & MODEL #	CFM	MAXIMUM STATIC PRESSURE DROP IN WC	REMARKS
SR-1	TITUS 300RL OR EQUAL	2,975	0.15	SUPPLY WALL GRILLE/REGISTER, 3/4" BLADE SPACING, STEEL, DOUBLE DEFLECTION, 45° THROW.
RR-1	TITUS 350ZRL OR EQUAL	2,975	0.1	RETURN WALL GRILLE/REGISTER, 3/4" BLADE SPACING, STEEL, DOUBLE DEFLECTION, 0° DEFLECTION.

ELECTRIC UNIT HEATER SCHEDULE

SYMBOL	MANUFACTURER & MODEL #	CFM	BTUH	KW	VOLTAGE	AMPS	TEMP RISE (°F)	AIR THROW (FEET)	MOUNTING HEIGHT (FEET)	WEIGHT (LBS)	REMARKS
61UH101	MARKEL 5100 SERIES P3P5110CA1N OR EQUAL	700	34,100	10	480/3	12.1	45	22	10	60	HORIZONTAL MOUNTED FAN FORCED UNIT HEATER. PROVIDE HEATER WITH IN UNIT TEMPERATURE CONTROL THERMOSTAT, DISCONNECT SWITCH, AND WALL MOUNTING BRACKET.
61UH102	MARKEL 5100 SERIES P3P5110CA1N OR EQUAL	700	34,100	10	480/3	12.1	45	22	10	60	HORIZONTAL MOUNTED FAN FORCED UNIT HEATER. PROVIDE HEATER WITH IN UNIT TEMPERATURE CONTROL THERMOSTAT, DISCONNECT SWITCH, AND WALL MOUNTING BRACKET.
61UH103	MARKEL 5100 SERIES P3P5110CA1N OR EQUAL	700	34,100	10	480/3	12.1	45	22	10	60	HORIZONTAL MOUNTED FAN FORCED UNIT HEATER. PROVIDE HEATER WITH IN UNIT TEMPERATURE CONTROL THERMOSTAT, DISCONNECT SWITCH, AND WALL MOUNTING BRACKET.

SEQUENCE OF OPERATION:

ELECTRICAL BUILDING

PACKAGED AC UNIT (14ACU101):

UNIT SHALL MAINTAIN 85°F (ADJUSTABLE) IN THE ROOM. OCCUPANT SHALL BE ABLE TO ADJUST ZONE TEMPERATURE COOLING SETPOINTS AT ZONE THERMOSTAT. THERMOSTAT SHALL MEASURE ZONE TEMPERATURE AND ENABLE COOLING TO MAINTAIN ITS COOLING SETPOINT.

ECONOMIZER SHALL ENABLE WHENEVER OUTSIDE AIR IS LESS THAN 60°F (ADJUSTALBE). ECONOMIZER SHALL CLOSE WHENEVER THE OUTSIDE AIR TEMPERATURE IS HIGHER THAN 65°F (ADJUSTABLE).

OUTSIDE AIR DAMPER SHALL MAINTAIN A MINIMUM POSITION (ADJUSTABLE) WHEN ECONOMIZER IS DISABLED.

SOLIDS HANDLING BUILDING LOWER FLOOR

UNIT HEATER (61UH101, 61UH102, 61UH103):

UNIT HEATER SHALL MAINTAIN A HEATING SETPOINT OF 50°F (ADJUSTABLE) IN THE ROOM. UNIT SHALL RUN ANYTIME ZONE TEMPERATURE DROPS BELOW HEATING SETPOINT, UNLESS SHUT DOWN ON SAFETIES. THERMOSTAT SHALL MEASURE ZONE TEMPERATURE AND ENABLE HEATING TO MAINTAIN ITS HEATING SETPOINT.

SUPPLY FAN (61F101):

SUPPLY FAN SHALL RUN CONTINUOUSLY.

FILE: 00M001.dwg
DATE: Oct 06, 2015 - 4:27:06pm, rsnider

HDR Engineering, Inc.

ISSUE	DATE	DESCRIPTION
A	JUNE 2015	ISSUED FOR BID

PROJECT MANAGER	C. OLSON
DESIGNED	K. CHEUNG
DESIGNED	T. KONTONICKAS
CHECKED	C. OLSON
DRAWN	K. CHEUNG
DATE	JUNE 30, 2015
PROJECT NUMBER	215786

REGISTERED PROFESSIONAL ENGINEER THEODORE H. KONTONICKAS NO. 29378 EXP. 06/30/17 MECHANICAL STATE OF CALIFORNIA 06-30-15

CITY OF PINOLE CALIFORNIA 1903

PINOLE/HERCULES
WATER POLLUTION
CONTROL PLANT UPGRADE
CLIENT PN

MECHANICAL

SCHEDULES AND SEQUENCE OF OPERATIONS

0 1" 2"

FILENAME	00M001
SCALE	AS NOTED

SHEET **00M001**

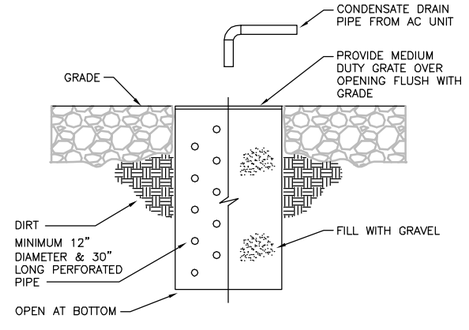

1 DRYWELL / FRENCH DRAIN DETAIL

SCALE: NONE

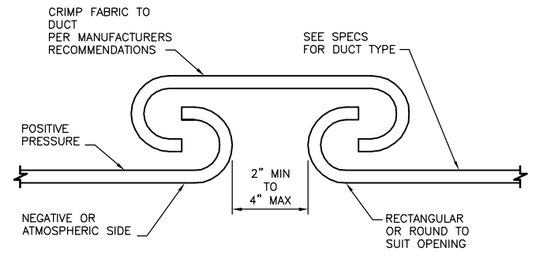

NOTES:

1. FABRICATE AND INSTALL PER SMACNA.
2. REFER TO SMACNA AND SPECIFICATIONS FOR ADDITIONAL REQUIREMENTS.

2 FLEXIBLE DUCT CONNECTION DETAIL

SCALE: NONE

FILE: 00M002.dwg
DATE: Oct 06, 2015 - 4:27:13pm, rsnider

HDR Engineering, Inc.

ISSUE	DATE	DESCRIPTION
A	JUNE 2015	ISSUED FOR BID

PROJECT MANAGER	C. OLSON
DESIGNED	K. CHEUNG
DESIGNED	T. KONTONICKAS
CHECKED	C. OLSON
DRAWN	K. CHEUNG
DATE	JUNE 30, 2015
PROJECT NUMBER	215786

REGISTERED PROFESSIONAL ENGINEER
THEODORE H. KONTONICKAS
NO. 29378
EXP. 06/30/17
MECHANICAL
STATE OF CALIFORNIA
06-30-15

CITY OF PINOLE CALIFORNIA 1903

PINOLE/HERCULES
WATER POLLUTION
CONTROL PLANT UPGRADE
CLIENT PN

MECHANICAL

DETAILS 1
TITLE LINE 4

0 1" 2"

FILENAME	00M002
SCALE	AS NOTED

SHEET **00M002**

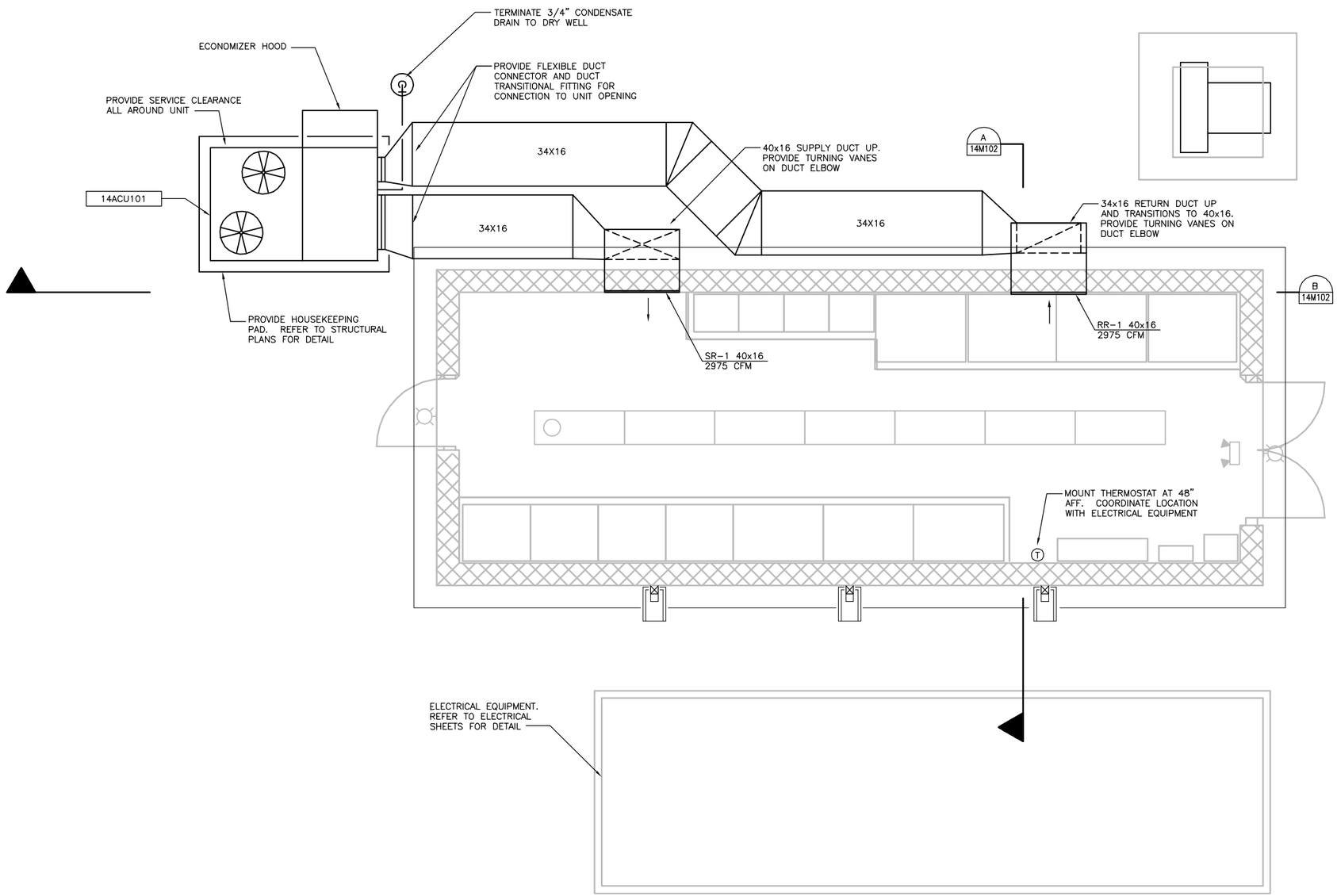

FLOOR PLAN

SCALE: 3/8" = 1'-0"

1

FILE: 215786-14M101.dwg
DATE: Oct 06, 2015-4:27:19pm, rsnider

HDR Engineering, Inc.

ISSUE	DATE	DESCRIPTION
A	JUNE 2015	ISSUED FOR BID

PROJECT MANAGER	C. OLSON
DESIGNED	K. CHEUNG
DESIGNED	T. KONTONICKAS
CHECKED	C. OLSON
DRAWN	K. CHEUNG
DATE	JUNE 30, 2015
PROJECT NUMBER	215786

REGISTERED PROFESSIONAL ENGINEER
THEODORE H. KONTONICKAS
NO. 29378
EXP. 06/30/17
MECHANICAL
STATE OF CALIFORNIA
06-30-15

CITY OF PINOLE CALIFORNIA 1903

PINOLE/HERCULES
WATER POLLUTION
CONTROL PLANT UPGRADE
CLIENT PN

MECHANICAL

ELECTRICAL BUILDING FLOOR PLAN

0 1" 2"

FILENAME	215786-14M101
SCALE	NTS

SHEET
14M101

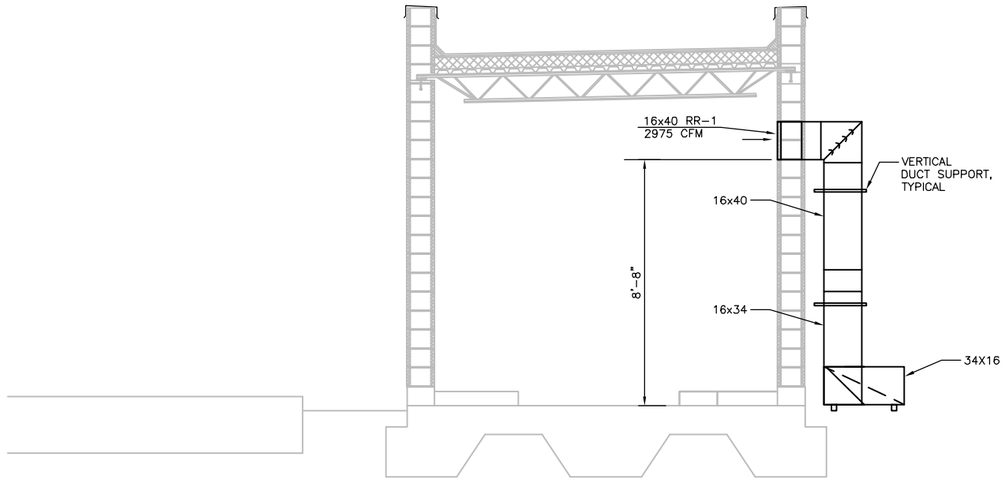

SECTION
SCALE: 3/8" = 1'-0"

A
14M101

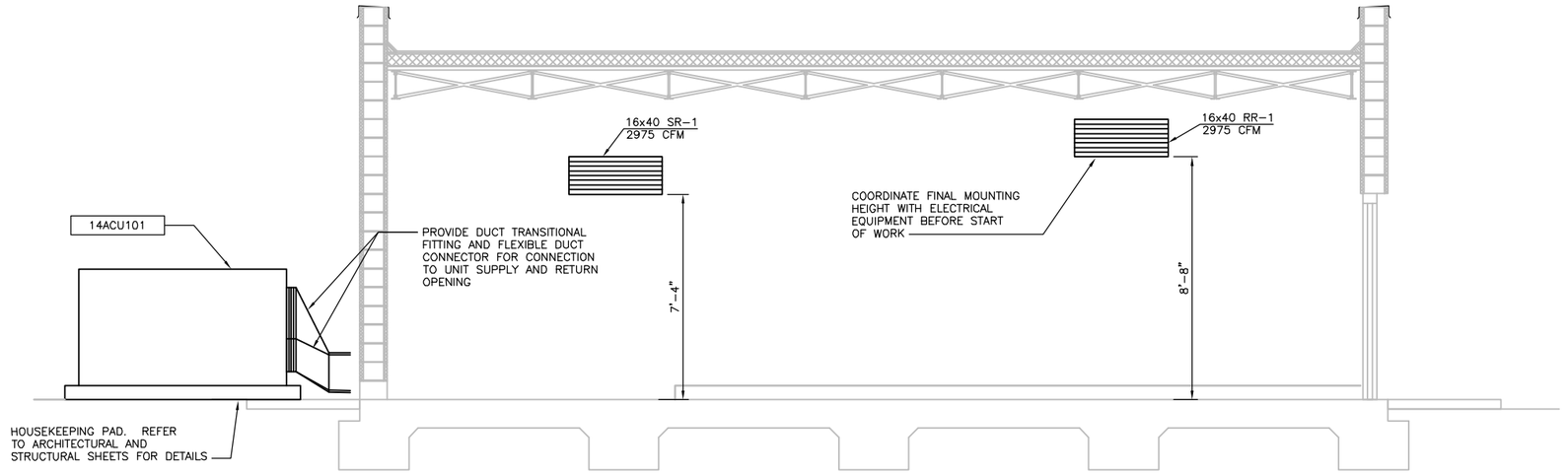

SECTION
SCALE: 3/8" = 1'-0"

B
14M101

FILE: 215786-14M102.dwg
DATE: Oct 06, 2015-4:27:25pm, rsnider

HDR Engineering, Inc.

ISSUE	DATE	DESCRIPTION
A	JUNE-2015	ISSUED FOR BID

PROJECT MANAGER	C. OLSON
DESIGNED	K. CHEUNG
DESIGNED	T. KONTONICKAS
CHECKED	C. OLSON
DRAWN	K. CHEUNG
DATE	JUNE 30, 2015
PROJECT NUMBER	215786

REGISTERED PROFESSIONAL ENGINEER
THEODORE H. KONTONICKAS
NO. 29378
EXP. 06/30/17
MECHANICAL
STATE OF CALIFORNIA
06-30-15

CITY OF PINOLE CALIFORNIA 1903

PINOLE/HERCULES
WATER POLLUTION
CONTROL PLANT UPGRADE
CLIENT PN

MECHANICAL
TITLE LINE 2
ELECTRICAL BUILDING SECTIONS
TITLE LINE 4

0 1" 2"

FILENAME	215786-14M102
SCALE	AS NOTED

SHEET
14M102

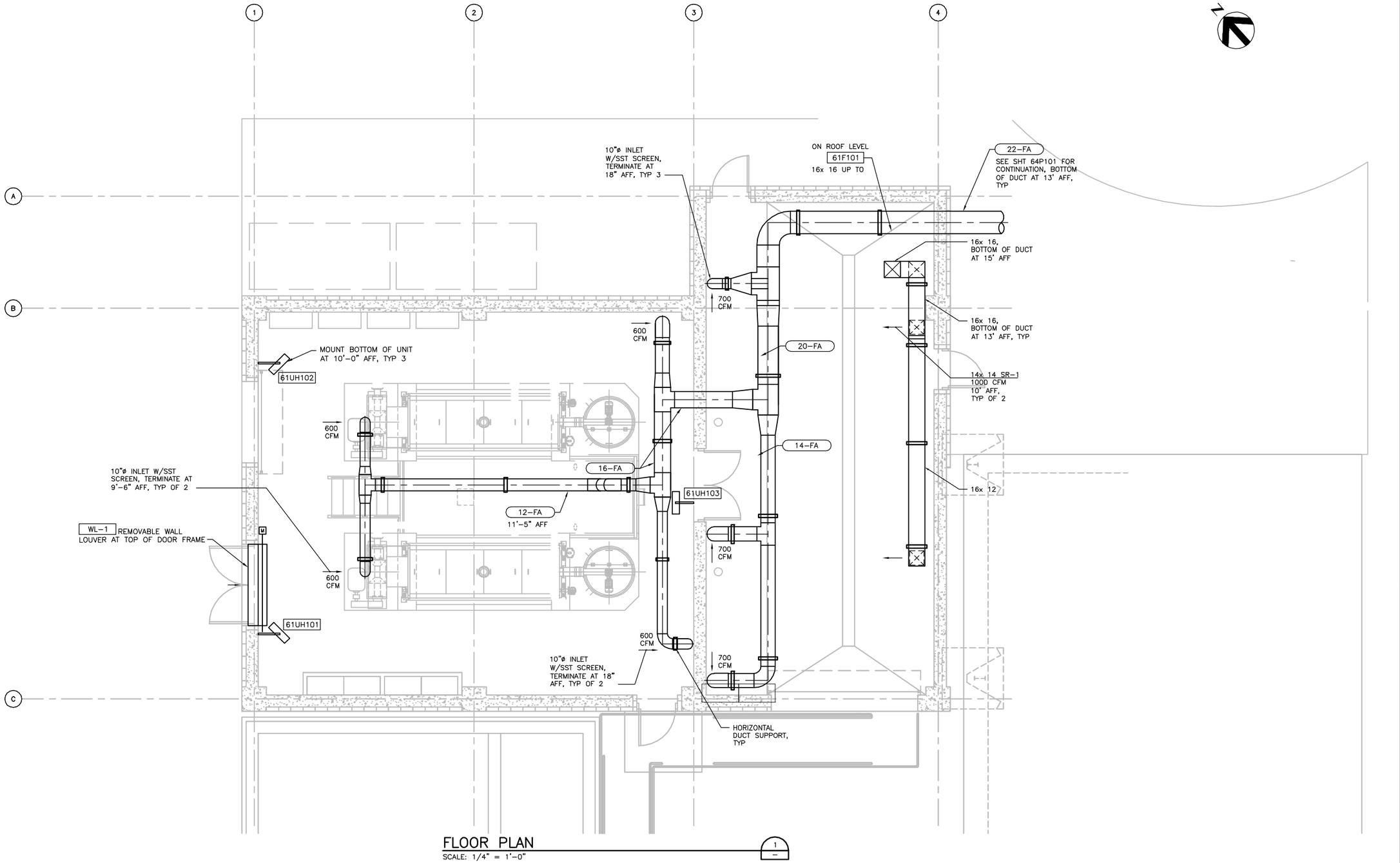

FLOOR PLAN
SCALE: 1/4" = 1'-0"

FILE: 215786-61M101.dwg
DATE: Oct 06, 2015-4:27:33pm, ranider

HDR Engineering, Inc.

ISSUE	DATE	DESCRIPTION
A	JUNE 2015	ISSUED FOR BID

PROJECT MANAGER	C. OLSON
DESIGNED	K. CHEUNG
DESIGNED	T. KONTONICKAS
CHECKED	C. OLSON
DRAWN	R. SNIDER
DATE	JUNE 30, 2015
PROJECT NUMBER	215786

REGISTERED PROFESSIONAL ENGINEER THEODORE H. KONTONICKAS NO. 29378 EXP. 06/30/17 MECHANICAL STATE OF CALIFORNIA

CITY OF PINOLE CALIFORNIA 1903

PINOLE/HERCULES
WATER POLLUTION
CONTROL PLANT UPGRADE
CLIENT PN

MECHANICAL

SOLIDS HANDLING BUILDING LOWER FLOOR PLAN

0 1" 2"

FILENAME	215786-61M101
SCALE	AS NOTED

SHEET **61M101**

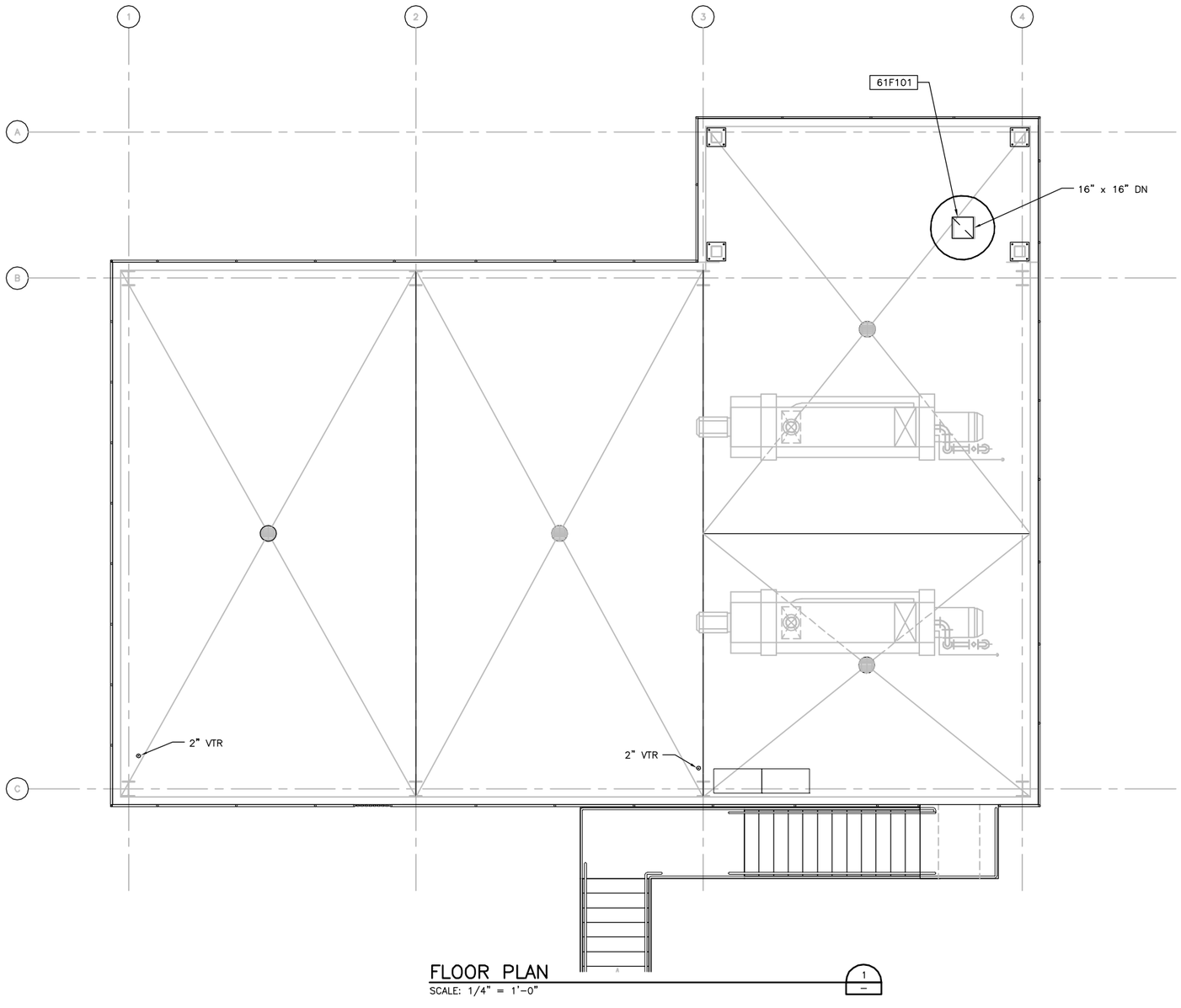

FLOOR PLAN
SCALE: 1/4" = 1'-0"

FILE: 215786-61M102.dwg
DATE: Oct 06, 2015-4:27:41pm, rsnider

HDR Engineering, Inc.

ISSUE	DATE	DESCRIPTION
A	JUNE 2015	ISSUED FOR BID

PROJECT MANAGER	C. OLSON
DESIGNED	K. CHEUNG
DESIGNED	T. KONTONICKAS
CHECKED	C. OLSON
DRAWN	R. SNIDER
DATE	JUNE 30, 2015
PROJECT NUMBER	215786

REGISTERED PROFESSIONAL ENGINEER
THEODORE H. KONTONICKAS
NO. 29378
EXP. 06/30/17
MECHANICAL
STATE OF CALIFORNIA
06-30-15

CITY OF PINOLE CALIFORNIA 1903

PINOLE/HERCULES
WATER POLLUTION
CONTROL PLANT UPGRADE
CLIENT PN

MECHANICAL

SOLIDS HANDLING BUILDING
UPPER FLOOR PLAN

0 1" 2"

FILENAME	215786-61M102
SCALE	AS NOTED

SHEET
61M102

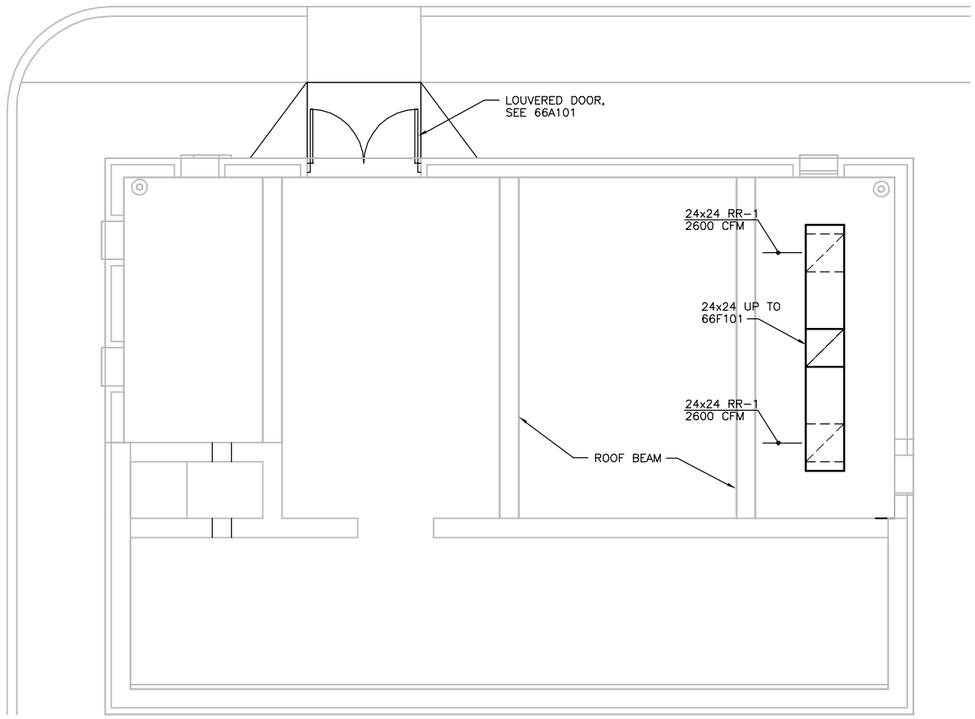

FLOOR PLAN
1/4" = 1'-0"

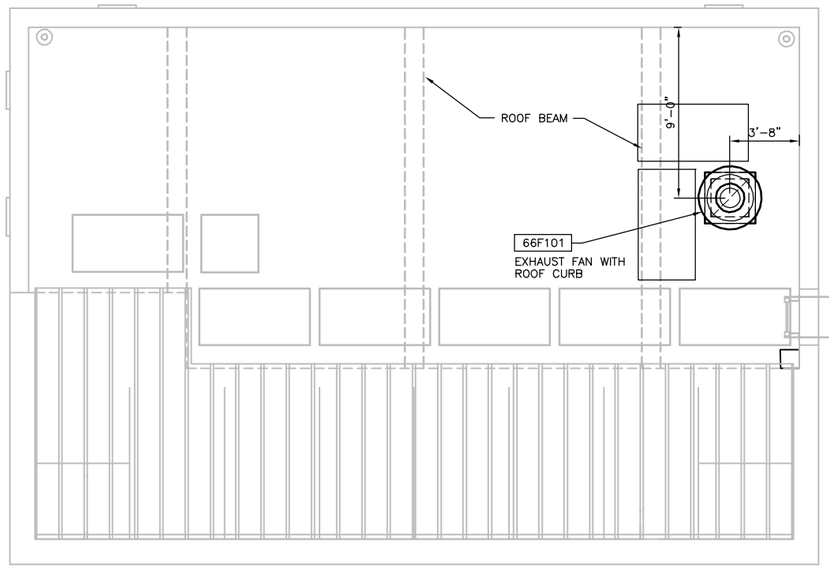

ROOF PLAN
1/4" = 1'-0"

FILE: 215786-66M101.dwg
DATE: Oct 06, 2015-4:27:47pm, rsnider

HDR Engineering, Inc.

ISSUE	DATE	DESCRIPTION
A	JUNE 2015	ISSUED FOR BID

PROJECT MANAGER	C. OLSON
DESIGNED	T. KONTONICKAS
DESIGNED	
CHECKED	C. OLSON
DRAWN	R. SNIDER
DATE	JUNE 30, 2015
PROJECT NUMBER	215786

REGISTERED PROFESSIONAL ENGINEER
THEODORE H. KONTONICKAS
NO. 29378
EXP. 06/30/17
MECHANICAL
STATE OF CALIFORNIA
06-30-15

CITY OF PINOLE CALIFORNIA 1903

PINOLE/HERCULES
WATER POLLUTION
CONTROL PLANT UPGRADE
CLIENT PN

MECHANICAL

MAINTENANCE SHOP FLOOR AND ROOF PLAN

0 1" 2"

FILENAME	215786-66M101
SCALE	AS NOTED

SHEET
66M101

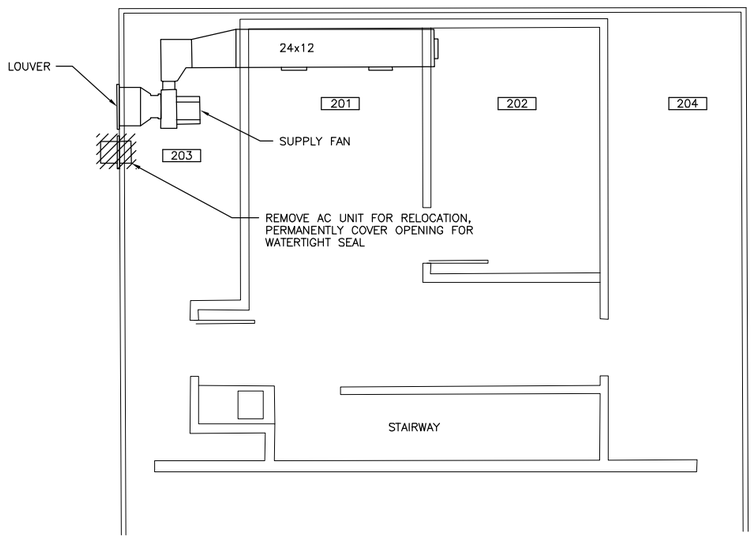

LOFT DEMOLITION PLAN
1/4" = 1'-0"

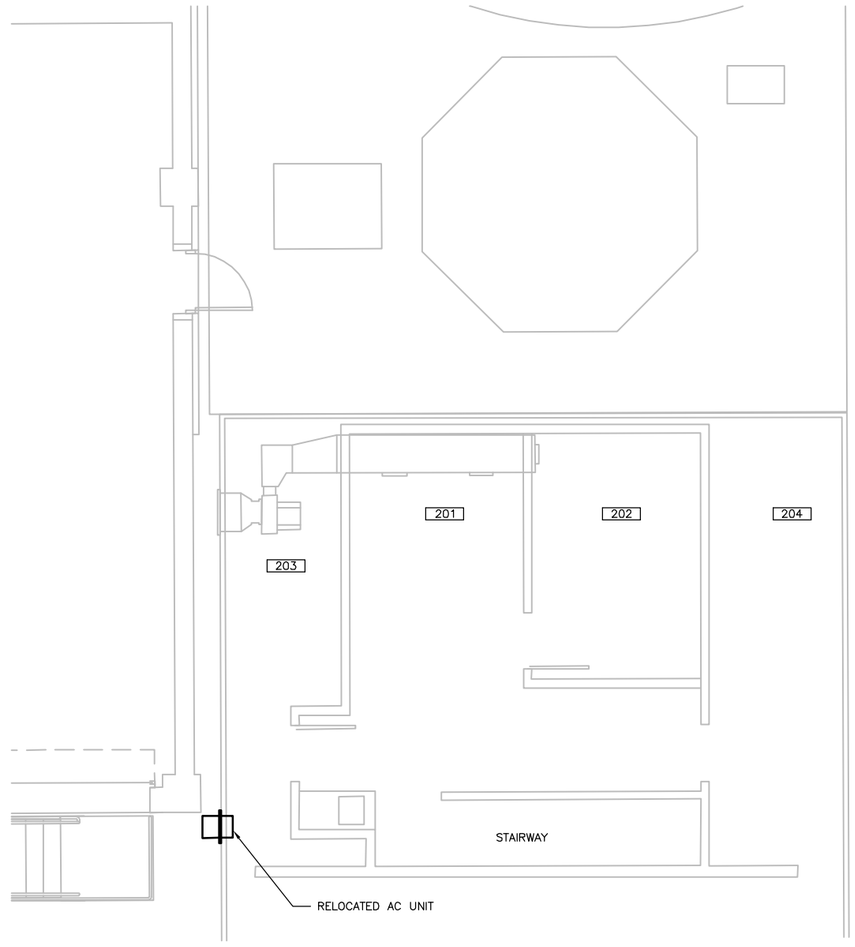

LOFT PLAN
1/4" = 1'-0"

FILE: 215786-67M101.dwg
DATE: Oct 06, 2015-4:27:53pm, rsnider

HDR Engineering, Inc.

ISSUE	DATE	DESCRIPTION
A	JUNE 2015	ISSUED FOR BID

PROJECT MANAGER	C. OLSON
DESIGNED	T. KONTONICKAS
DESIGNED	
CHECKED	
DRAWN	R. SNIDER
DATE	JUNE 30, 2015
PROJECT NUMBER	215786

REGISTERED PROFESSIONAL ENGINEER
THEODORE H. KONTONICKAS
NO. 29378
EXP. 06/30/17
MECHANICAL
STATE OF CALIFORNIA
06-30-15

CITY OF PINOLE CALIFORNIA 1903

PINOLE/HERCULES
WATER POLLUTION
CONTROL PLANT UPGRADE
CLIENT PN

MECHANICAL

CORPORATION YARD BUILDING
HVAC MODIFICATIONS

0 1" 2"

FILENAME	215786-67M101
SCALE	AS NOTED

SHEET
67M101

1

X 20A OR 100AF 80AT 3P — LOW – VOLTAGE CIRCUIT BREAKER (CB). RATINGS AND NO. OF POLES AS SHOWN. WHEN SPECIFIC TYPE IS REQUIRED, X INDICATES TYPE.

TYPES:
MCCB – MOLDED CASE
ICCB – INSULATED CASE
LVP – LOW – VOLTAGE POWER
MCP – MOTOR CIRCUIT PROTECTOR
(RATING PER CONNECTED LOAD)

CB — SEPARATELY MOUNTED CIRCUIT BREAKER; SEE ELECTRICAL ONE – LINE DIAGRAM OR SCHEDULE FOR DESCRIPTION

GFP — GROUND FAULT PROTECTION

52 — MEDIUM – VOLTAGE CIRCUIT BREAKER

FUSE, SIZE, AND NUMBER OF FUSES AS NOTED

FUSED CUTOUT, CURRENT RATING, FUSE SIZE, AND NUMBER OF POLES AS NOTED

FUSIBLE SWITCH, CURRENT RATING, FUSE SIZE, AND QUANTITY AS NOTED

NON–FUSED SWITCH, CURRENT RATING, AND NUMBER OF POLES AS NOTED

DISCONNECT OR DRAWOUT CONNECTION

A B C & A B C — MAGNETIC MOTOR STARTER AND SEPARATELY MOUNTED COMBINATION MAGNETIC MOTOR STARTER

D C & D C — MOTOR CONTROLLER AND SEPARATELY MOUNTED MOTOR CONTROLLER WITH SHORT CIRCUIT PROTECTION AND DISCONNECT

MOTOR STARTER AND CONTROLLER SUBSCRIPTS:

A – MAGNETIC STARTER NEMA SIZE

B – STARTER TYPE
NONE – FULL VOLTAGE NON–REVERSING (FVNR)
FVR – FULL VOLTAGE REVERSING
2S – TWO SPEED
RVAT – REDUCED VOLTAGE AUTO TRANSFORMER
CONT – CONTACTOR ONLY

C – CONTROL DIAGRAM OR CONTROLS SCHEDULE NUMBER (IF REQUIRED)

D – CONTROLLER TYPE
VFD – VARIABLE FREQUENCY DRIVE
SS – SOLID STATE

SEPARATELY MOUNTED COMBINATION MOTOR STARTER OR CONTROLLER; SEE ELECTRICAL ONE – LINE DIAGRAM OR SCHEDULE FOR DESCRIPTION

THERMAL OVERLOAD ELEMENT

OL — THERMAL OVERLOAD RELAY CONTACT

DISCONNECT OR SAFETY SWITCH, 30A, 3P, NON–FUSED UNLESS OTHERWISE NOTED

7 1/2 OR HP — MOTOR WITH DESIGN HORSEPOWER (WHEN INDICATED)

G — GENERATOR

ATS — TRANSFER SWITCH, CURRENT RATING, AND NUMBER OF POLES AS NOTED

ATS – AUTOMATIC
MTS – MANUAL

TRANSFORMER

Δ 3–PHASE, 3–WIRE DELTA CONNECTION

Y 3–PHASE, 4–WIRE GROUNDED WYE CONNECTION

LP100 208/120V 3Ø, 4W — SWITCHBOARD OR PANELBOARD; NAME, VOLTAGE, PHASE, NUMBER OF WIRES WHEN INDICATED

2

100 KVA — NON–MOTOR LOAD WITH DESIGN KVA, KW, OR AMP

CPT — CONTROL POWER TRANSFORMER (CPT)

VOLTAGE TRANSFORMER (VT OR PT)

CURRENT TRANSFORMER (CT)

WH — UTILITY WATT–HOUR METER PER UTILITY REQUIREMENTS

DMP — DIGITAL METERING PACKAGE

RTM — RUN TIME METER

GROUND

LIGHTNING ARRESTER

SPD — LOW VOLTAGE SURGE PROTECTIVE DEVICE

ELECTRICAL CONNECTION

OR OR — NO ELECTRICAL CONNECTION

SV OR — SOLENOID VALVE

X Y — CONTROL/RELAY COIL; X INDICATES TYPE, Y INDICATES LOOP NO. WHEN USED

TYPES:
CR – CONTROL RELAY
DP – DEFINITE PURPOSE RELAY
LC – LIGHTING CONTACTOR
M – MOTOR STARTER
PC – PHOTO CELL
TC – TIME CLOCK
TR – TIMING RELAY

NORMALLY OPEN CONTACT (N.O.)

NORMALLY CLOSED CONTACT (N.C.)

NORMALLY OPEN TIME DELAY RELAY CONTACT WITH TIME DELAY ON CLOSING AFTER COIL IS ENERGIZED

NORMALLY CLOSED TIME DELAY RELAY CONTACT WITH TIME DELAY ON OPENING AFTER COIL IS ENERGIZED

NORMALLY OPEN TIME DELAY RELAY CONTACT WITH TIME DELAY ON OPENING AFTER COIL IS DE–ENERGIZED

NORMALLY CLOSED TIME DELAY RELAY CONTACT WITH TIME DELAY ON CLOSING AFTER COIL IS DE–ENERGIZED

NORMALLY OPEN TEMPERATURE SWITCH; CLOSE ON RISING TEMPERATURE

NORMALLY CLOSED TEMPERATURE SWITCH; OPEN ON RISING TEMPERATURE

NORMALLY OPEN FLOW SWITCH; CLOSE ON INCREASING FLOW

NORMALLY CLOSED FLOW SWITCH; OPEN ON INCREASING FLOW

NORMALLY OPEN LEVEL SWITCH, CLOSE ON RISING LEVEL

NORMALLY CLOSED LEVEL SWITCH, OPEN ON RISING LEVEL

NORMALLY OPEN PRESSURE SWITCH, CLOSE ON INCREASING PRESSURE

NORMALLY CLOSED PRESSURE SWITCH, OPEN ON INCREASING PRESSURE

3

NORMALLY OPEN LIMIT SWITCH, CLOSE ON REACHING LIMIT

NORMALLY CLOSED LIMIT SWITCH, OPEN ON REACHING LIMIT

FIELD WIRING EXTERNAL TO CONTROL PANEL

X — INTERLOCK; X INDICATES TYPE

TYPES:
E – ELECTRICAL
M – MECHANICAL
K – KEY

HAND OFF AUTO; XOO; OOX — 3 POSITION SELECTOR SWITCH, MAINTAINED CONTACTS; UNLESS OTHERWISE NOTED, 2–POSITION SIMILAR

NORMALLY OPEN PUSHBUTTON, MOMENTARY CONTACT UNLESS OTHERWISE NOTED

NORMALLY CLOSED PUSHBUTTON, MOMENTARY CONTACT UNLESS OTHERWISE NOTED

X — INDICATING LIGHT, X INDICATES LENS COLOR

X — PUSH TO TEST INDICATING LIGHT, X INDICATES LENS COLOR

LENS COLORS:
R – RED
G – GREEN
B – BLUE
Y – YELLOW
W – WHITE
A – AMBER

T — TRANSFORMER

LOS — LOCKOUT STOP

SS — SELECTOR SWITCH

CS — CONTROL STATION

IC — INSTRUMENTATION/CONTROL DEVICE

CONTROL PANEL INTEGRAL OR PROVIDED WITH ASSOCIATED EQUIPMENT

CONTROL PANEL WITH DISCONNECT SWITCH INTEGRAL OR PROVIDED WITH ASSOCIATED EQUIPMENT

J — JUNCTION OR PULL BOX

PANELBOARD (250V TO 600V)

PANELBOARD (LESS THAN 250V)

ELECTRICAL EQUIPMENT ENCLOSURE: SWITCHBOARD, MOTOR CONTROL CENTER, CONTROL PANEL, OR OTHER EQUIPMENT AS INDICATED

PC — PHOTOCELL

X Y — CEILING/PENDANT–MOUNTED LUMINAIRE – HID, COMPACT FLUORESCENT, OR INCANDESCENT

X Y — WALL–MOUNTED LUMINAIRE – HID, COMPACT FLUORESCENT, OR INCANDESCENT

X Y — 2'X4' CEILING/PENDANT–MOUNTED FLUORESCENT FIXTURE

X Y — 1'X4' WALL–MOUNTED FLUORESCENT FIXTURE

X Y — 2'X4' CEILING/PENDANT–MOUNTED FLUORESCENT FIXTURE

X Y — 1'X4' CEILING/PENDANT–MOUNTED FLUORESCENT FIXTURE

X Y — 2'X4' CEILING/PENDANT–MOUNTED FLUORESCENT FIXTURE NORMAL/EMERGENCY

X Y — 1'X4' CEILING/PENDANT–MOUNTED FLUORESCENT FIXTURE NORMAL/EMERGENCY

X Y — 1'X4' WALL–MOUNTED FLUORESCENT FIXTURE NORMAL/EMERGENCY

X Y — EMERGENCY LIGHT FIXTURE, 2 ATTACHED HEADS AS SHOWN

X Y — EMERGENCY LIGHT, REMOTE MOUNTED HEAD

X Y; X Y — DOUBLE–FACED CEILING OR WALL–MOUNTED EXIT LIGHT; DIRECTIONAL ARROWS (IF REQUIRED) AS INDICATED ON PLANS

4

X Y; X Y — SINGLE–FACED CEILING OR WALL–MOUNTED EXIT LIGHT; DIRECTIONAL ARROWS (IF REQUIRED) AS INDICATED ON PLANS

X Y — AREA OR ROADWAY LIGHT – POLE–MOUNTED

LIGHTING FIXTURE SUBSCRIPTS:
X – INDICATES FIXTURE TYPE PER LIGHTING FIXTURE SCHEDULE
Y – INDICATES CIRCUIT NUMBER FROM PANELBOARD
z – INDICATES CONTROLLING SWITCH (IF REQUIRED)

Y X — TOGGLE SWITCH

SUBSCRIPTS:
X – INDICATES TYPE
NONE – SINGLE POLE
3 – THREE–WAY
4 – FOUR–WAY
HP – TOGGLE SWITCH, HORSEPOWER RATED
K – KEY SWITCH
TE – MANUAL MOTOR STARTER WITH THERMAL ELEMENT
P – PILOT LIGHT
L – LIGHTED HANDLE
Y – INDICATES CONTROLLING SWITCH (IF REQUIRED)

SITE LIGHT, TYPE 1

COILED 20FT OF CAT 6 CABLE FOR DATA CONNECTION

SPECIAL–PURPOSE RECEPTACLE AS DEFINED ON PLANS

SPECIAL–PURPOSE RECEPTACLE FLOOR MOUNTED

PLUG–IN RECEPTACLE STRIP, QUANTITY AND SPACING OF RECEPTACLES AS NOTED OR SPECIFIED

X — TELECOMMUNICATIONS OUTLET JUNCTION BOX
X – INDICATES NUMBER OF PORTS

X Y — QUAD–DUPLEX RECEPTACLE, TWO NEMA 5–20R UNDER COMMON COVER PLATE

X Y — DUPLEX RECEPTACLE, NEMA 5–20R

X Y — DUPLEX RECEPTACLE, NEMA 5–20R, FLOOR MOUNTED

X Y — SIMPLEX RECEPTACLE, NEMA 5–20R

X Y — SIMPLEX RECEPTACLE, 208V, 1ø

SUBSCRIPTS:
X – INDICATES TYPE
GFCI – GROUND FAULT CIRCUIT INTERRUPTER
Y – INDICATES CIRCUIT NUMBER FROM PANELBOARD

CONDUIT TURNING UP

CONDUIT TURNING DOWN

HOME RUN TO PANEL, 2 #12, 1 #12G IN 3/4"C UNLESS OTHERWISE NOTED

CIRCUIT RUN BETWEEN DEVICES EXPOSED IN NON–ARCHITECTURALLY FINISHED AREAS; CONCEALED IN ARCHITECTURALLY FINISHED AREAS. CONDUIT AND CONDUCTOR SIZES SHALL BE THE SAME AS THE HOMERUN FOR THE CIRCUIT.

CONDUIT RUN BETWEEN DEVICES CONCEALED IN NON–ARCHITECTURALLY FINISHED AREAS OR UNDER FLOOR SLAB. CONDUIT AND CONDUCTOR SIZES SHALL BE THE SAME AS THE HOMERUN FOR THE CIRCUIT.

CIRCUIT HASH MARKS (WHEN INDICATED); LONG, SHORT, SINGLE DOT, AND DOUBLE DOT REPRESENT PHASE, NEUTRAL, EQUIPMENT GROUND, AND ISOLATED EQUIPMENT GROUND, RESPECTIVELY. #12 IN 3/4" CONDUIT UNLESS OTHERWISE INDICATED.

CIRCUIT CONTINUATION

CONDUIT STUBBED OUT AND CAPPED

XXX — CONDUIT TAG OR CIRCUIT NUMBER – WIRE AND CONDUIT SIZE AS SPECIFIED IN CIRCUIT SCHEDULE ON THE SHEETS

5

GROUND CABLE

GROUND ROD

T — THERMOSTAT

GENERAL NOTES:

1. THIS IS A STANDARD ELECTRICAL SYMBOLOGY SHEET. NOT ALL SYMBOLS MAY BE USED ON THIS PROJECT.
2. IN GENERAL CONDUIT ROUTING IS NOT SHOWN ON THE PLANS. THE CONTRACTOR SHALL BE RESPONSIBLE FOR ROUTING ALL CONDUITS INCLUDING THOSE SHOWN ON ONE LINE AND HOMERUNS. SEE SPECIFICATIONS FOR CONDUIT INSTALLATION REQUIREMENTS. CONDUIT ROUTINGS AND STUB–UP LOCATIONS THAT ARE SHOWN ARE APPROXIMATE, EXACT ROUTINGS SHALL BE AS REQUIRED FOR EQUIPMENT FURNISHED.
3. WHEN BRANCH CIRCUITS ARE NOT SHOWN ON THE PLANS THE CONTRACTOR SHALL FURNISH AND INSTALL ALL CONDUITS AND CONDUCTORS REQUIRED. CONDUIT AND CONDUCTOR SIZES SHALL BE THE SAME AS THE HOMERUN FOR THE BRANCH CIRCUIT.
4. PHANTOM LINES ARE USED TO INDICATE EXISTING COMPONENTS OR TO DE–EMPHASIZE PROPOSED IMPROVEMENTS TO HIGHLIGHT SELECTED TRADE WORK. REFER TO CONTEXT OF EACH SHEET FOR USAGE.
5. SEE P&ID LEGEND SHEET FOR PROJECT–SPECIFIC EQUIPMENT SYMBOLS, EQUIPMENT ABBREVIATIONS, ABBREVIATIONS.

FILE: 215786–00E001.dwg
DATE: Oct 06, 2015–4:29:05pm, rsnider

HDR Engineering, Inc.

ISSUE	DATE	DESCRIPTION
A	JUNE 2015	ISSUED FOR BID

PROJECT MANAGER	C. OLSON
DESIGNED	W.F. ETTLICH
DESIGNED	
CHECKED	L.D. SMITHEY
DRAWN	E.G. SESPENE
DATE	JUNE 30, 2015
PROJECT NUMBER	215786

REGISTERED PROFESSIONAL ENGINEER — WILLIAM F. ETTLICH — NO. 07625 EXP. 09/30/16 — ELECTRICAL — STATE OF CALIFORNIA — 06-30-15

CITY OF PINOLE CALIFORNIA 1903

PINOLE/HERCULES
WATER POLLUTION
CONTROL PLANT UPGRADE
CLIENT PN

ELECTRICAL

SYMBOLS LEGEND

0 1" 2"

FILENAME	215786–00E001
SCALE	NONE

SHEET 00E001

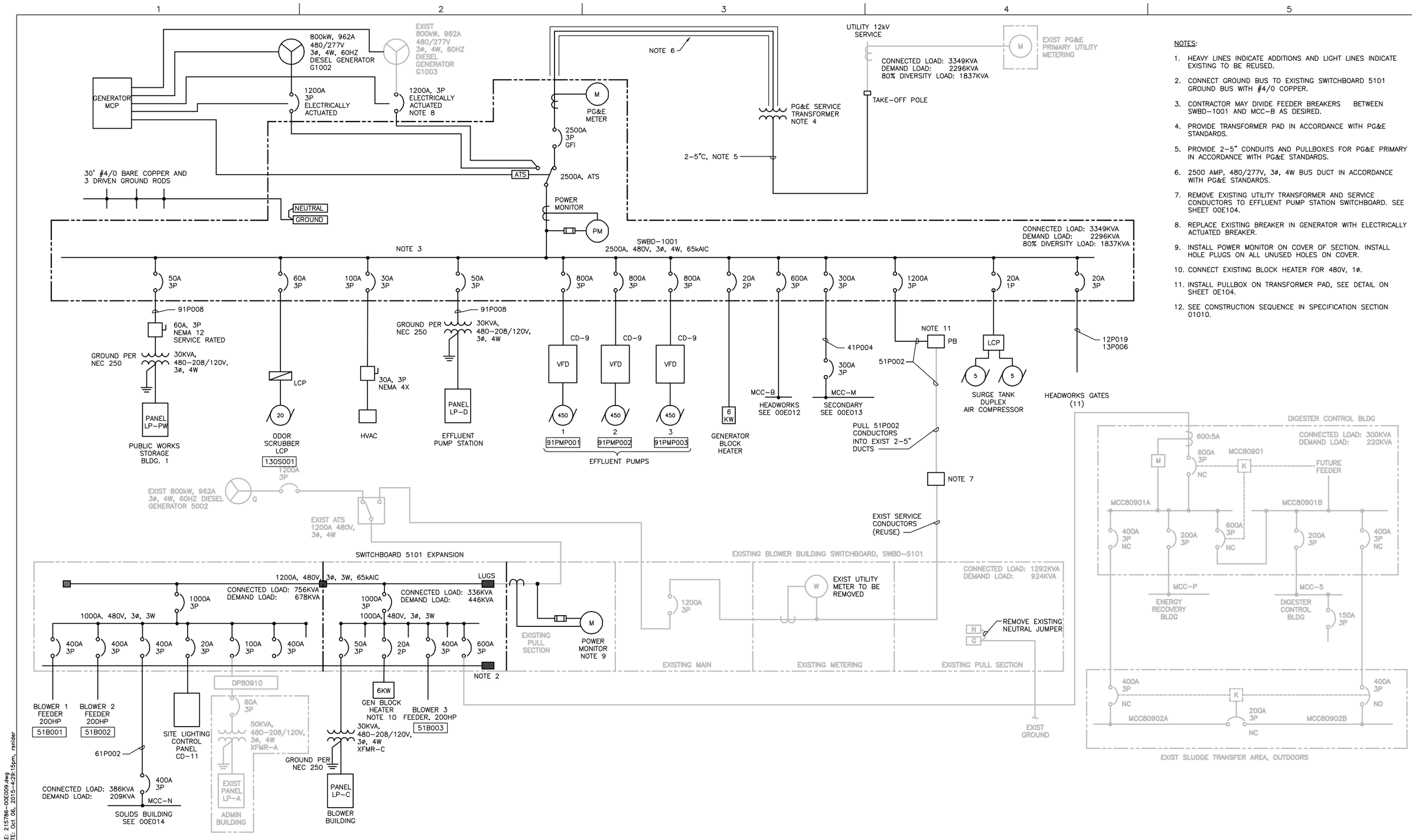

NOTES:

1. HEAVY LINES INDICATE ADDITIONS AND LIGHT LINES INDICATE EXISTING TO BE REUSED.
2. CONNECT GROUND BUS TO EXISTING SWITCHBOARD 5101 GROUND BUS WITH #4/0 COPPER.
3. CONTRACTOR MAY DIVIDE FEEDER BREAKERS BETWEEN SWBD-1001 AND MCC-B AS DESIRED.
4. PROVIDE TRANSFORMER PAD IN ACCORDANCE WITH PG&E STANDARDS.
5. PROVIDE 2-5" CONDUITS AND PULLBOXES FOR PG&E PRIMARY IN ACCORDANCE WITH PG&E STANDARDS.
6. 2500 AMP, 480/277V, 3ø, 4W BUS DUCT IN ACCORDANCE WITH PG&E STANDARDS.
7. REMOVE EXISTING UTILITY TRANSFORMER AND SERVICE CONDUCTORS TO EFFLUENT PUMP STATION SWITCHBOARD. SEE SHEET 00E104.
8. REPLACE EXISTING BREAKER IN GENERATOR WITH ELECTRICALLY ACTUATED BREAKER.
9. INSTALL POWER MONITOR ON COVER OF SECTION. INSTALL HOLE PLUGS ON ALL UNUSED HOLES ON COVER.
10. CONNECT EXISTING BLOCK HEATER FOR 480V, 1ø.
11. INSTALL PULLBOX ON TRANSFORMER PAD, SEE DETAIL ON SHEET 0E104.
12. SEE CONSTRUCTION SEQUENCE IN SPECIFICATION SECTION 01010.

FILE: 215786-00E009.dwg
DATE: Oct 06, 2015-4:29:15pm, rander

HDR Engineering, Inc.

ISSUE	DATE	DESCRIPTION
A	JUNE 2015	ISSUED FOR BID

PROJECT MANAGER	C. OLSON
DESIGNED	W.F. ETTLICH
DESIGNED	
CHECKED	L.D. SMITHEY
DRAWN	E.G. SESPENE
DATE	JUNE 30, 2015
PROJECT NUMBER	215786

REGISTERED PROFESSIONAL ENGINEER
WILLIAM F. ETTLICH
NO. 07625
EXP. 09/30/16
ELECTRICAL
STATE OF CALIFORNIA
06-30-15

CITY OF PINOLE CALIFORNIA 1903

PINOLE/HERCULES
WATER POLLUTION
CONTROL PLANT UPGRADE
CLIENT PN

ELECTRICAL

PRIMARY SERVICE SINGLE LINE DIAGRAM

0 1" 2"

FILENAME	215786-00E009
SCALE	NONE

SHEET **00E009**

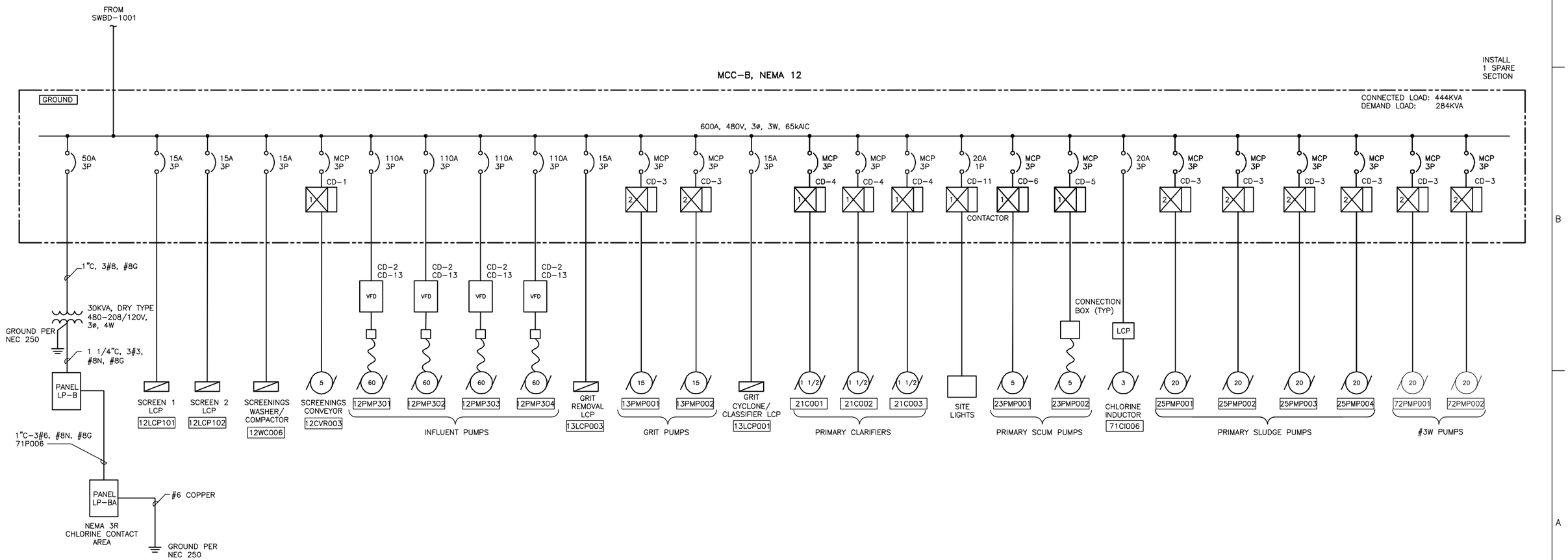

FILE: 215786-00E012.dwg
DATE: Oct 06, 2015-4:29:20pm, rsnider

HDR Engineering, Inc.

ISSUE	DATE	DESCRIPTION
A	JUNE 2015	ISSUED FOR BID

PROJECT MANAGER	C. OLSON
DESIGNED	W.F. ETTLICH
DESIGNED	
CHECKED	L.D. SMITHEY
DRAWN	E.G. SESPENE
DATE	JUNE 30, 2015
PROJECT NUMBER	215786

REGISTERED PROFESSIONAL ENGINEER
WILLIAM F. ETTLICH
NO. 07625
EXP. 09/30/16
ELECTRICAL
STATE OF CALIFORNIA
09-30-15

CITY OF PINOLE CALIFORNIA 1903

PINOLE/HERCULES
WATER POLLUTION
CONTROL PLANT UPGRADE
CLIENT PN

ELECTRICAL

MCC-B
SINGLE LINE DIAGRAM

0 1" 2"

FILENAME	215786-00E012
SCALE	NONE

SHEET
00E012

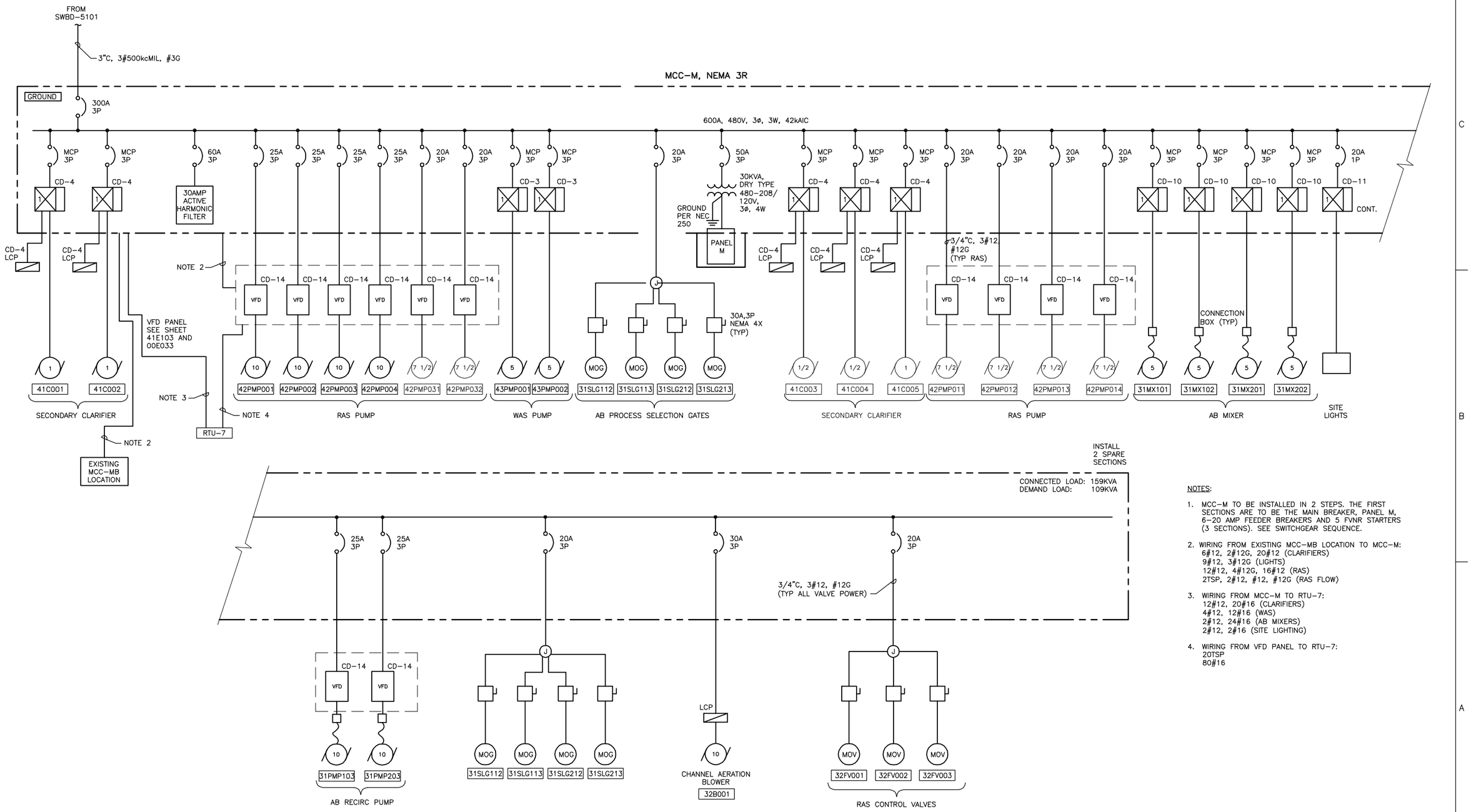

NOTES:

1. MCC-M TO BE INSTALLED IN 2 STEPS. THE FIRST SECTIONS ARE TO BE THE MAIN BREAKER, PANEL M, 6-20 AMP FEEDER BREAKERS AND 5 FVNR STARTERS (3 SECTIONS). SEE SWITCHGEAR SEQUENCE.
2. WIRING FROM EXISTING MCC-MB LOCATION TO MCC-M:
   6#12, 2#12G, 20#12 (CLARIFIERS)
   9#12, 3#12G (LIGHTS)
   12#12, 4#12G, 16#12 (RAS)
   2TSP, 2#12, #12, #12G (RAS FLOW)
3. WIRING FROM MCC-M TO RTU-7:
   12#12, 20#16 (CLARIFIERS)
   4#12, 12#16 (WAS)
   2#12, 24#16 (AB MIXERS)
   2#12, 2#16 (SITE LIGHTING)
4. WIRING FROM VFD PANEL TO RTU-7:
   20TSP
   80#16

HDR Engineering, Inc.

ISSUE	DATE	DESCRIPTION
A	JUNE 2015	ISSUED FOR BID

PROJECT MANAGER	C. OLSON
DESIGNED	W.F. ETTLICH
DESIGNED	
CHECKED	L.D. SMITHEY
DRAWN	E.G. SESPENE
DATE	JUNE 30, 2015
PROJECT NUMBER	215786

REGISTERED PROFESSIONAL ENGINEER
WILLIAM F. ETTLICH
NO. 07625
EXP. 09/30/16
ELECTRICAL
STATE OF CALIFORNIA
06-30-15

CITY OF PINOLE CALIFORNIA 1903

PINOLE/HERCULES WATER POLLUTION CONTROL PLANT UPGRADE
CLIENT PN

ELECTRICAL

SINGLE LINE DIAGRAM

0 1" 2"

FILENAME	215786-00E013
SCALE	NONE

SHEET **00E013**

FILE: 215786-00E013.dwg
DATE: Oct 06, 2015-4:29:25pm, ranider

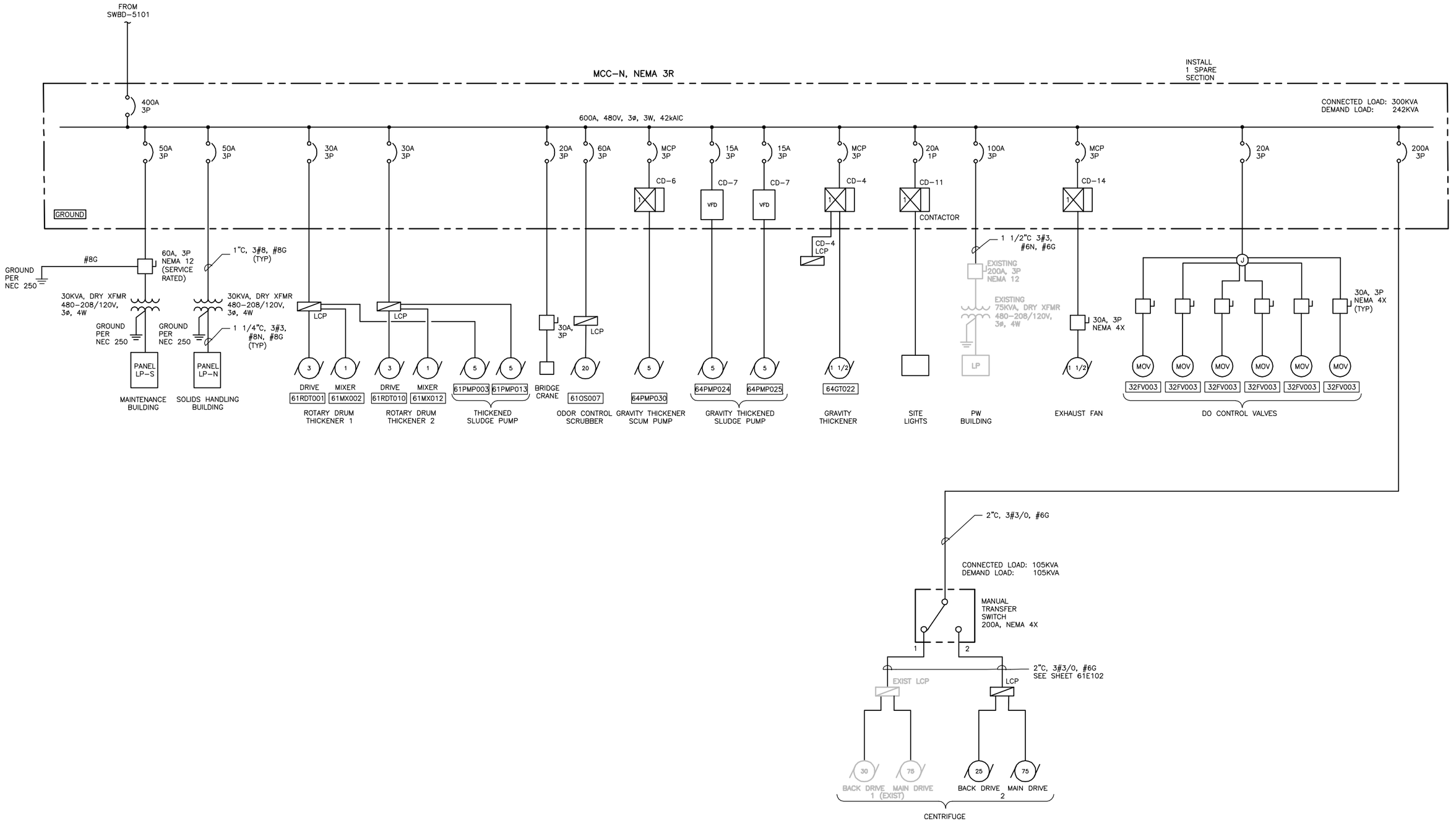

FILE: 215786-00E014.dwg
DATE: Oct 06, 2015-4:29:30pm, rsnider

HDR Engineering, Inc.

ISSUE	DATE	DESCRIPTION
A	JUNE 2015	ISSUED FOR BID

PROJECT MANAGER	C. OLSON
DESIGNED	W.F. ETTLICH
DESIGNED	
CHECKED	L.D. SMITHEY
DRAWN	E.G. SESPENE
DATE	JUNE 30, 2015
PROJECT NUMBER	215786

REGISTERED PROFESSIONAL ENGINEER
WILLIAM F. ETTLICH
NO. 07625
EXP. 09/30/16
ELECTRICAL
STATE OF CALIFORNIA
06-30-15

CITY OF PINOLE CALIFORNIA 1903

PINOLE/HERCULES
WATER POLLUTION
CONTROL PLANT UPGRADE
CLIENT PN

ELECTRICAL

SINGLE LINE DIAGRAM

0 1" 2"

FILENAME	215786-00E014
SCALE	NONE

SHEET **00E014**

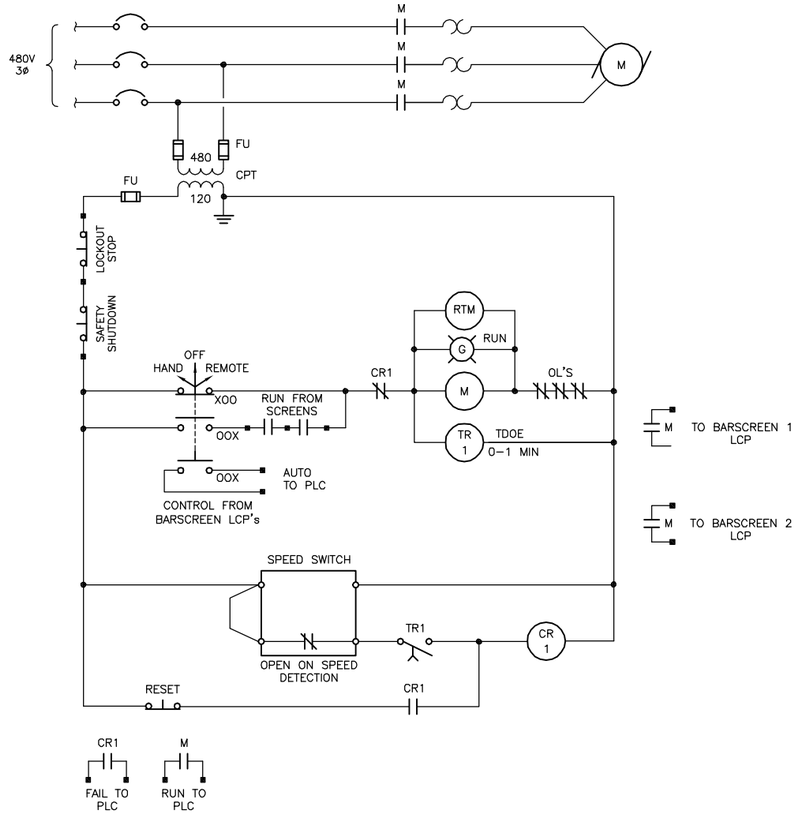

CD–1: CONVEYOR

NOT TO SCALE 12CVR003

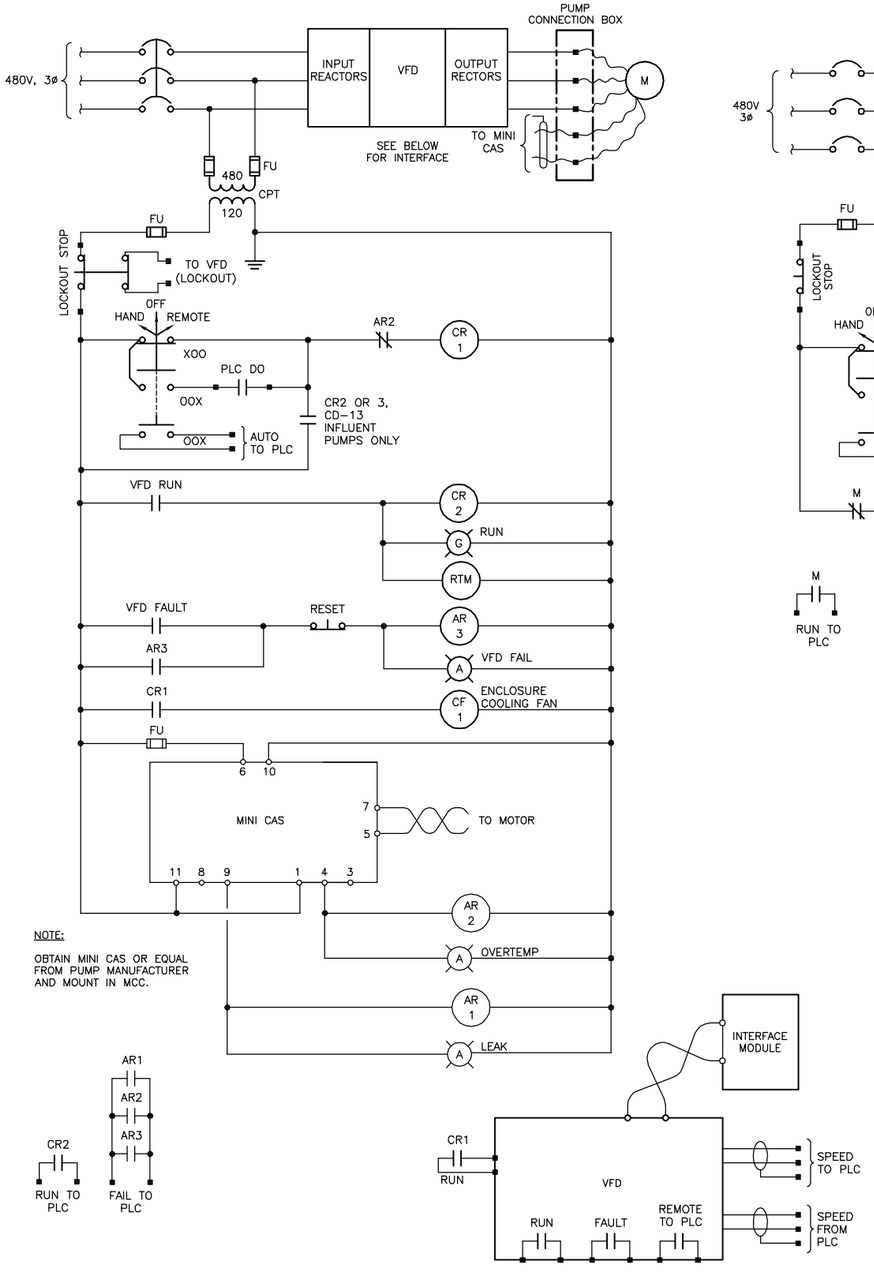

CD–2: VFD DRIVEN SUBMERSIBLE PUMP

NOT TO SCALE SEE NOTE 1

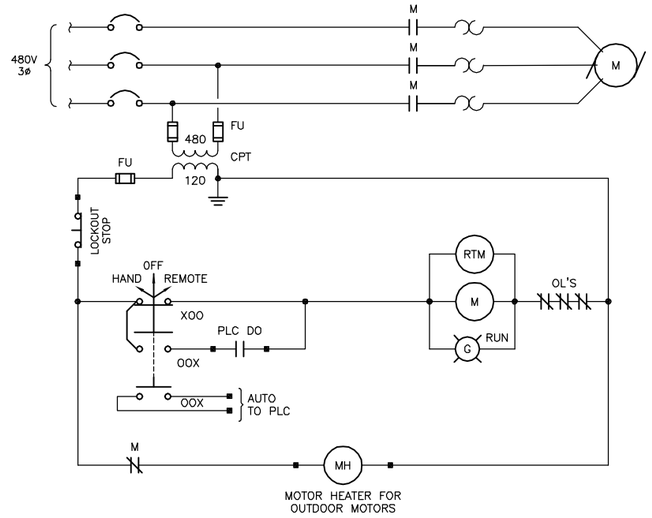

CD–3: PUMP CONTROL

NOT TO SCALE

CD NOTES:

1. FOR GRIT PUMPS 13PMP001 AND 13PMP002 THE AUTO CONTROL SIGNAL IS FROM VORTEX GRIT REMOVAL LCP, 13LCP003.

NOTES:

1. FOR CD–2 AND CD–8 FOR MCC–M DRIVES WITH VFD'S MOUNTED IN SEPARATE VFD PANEL: ONLY THE VFD IS MOUNTED IN THE SEPARATE PANEL, THE REST OF THE CD–2 EQUIPMENT INCLUDING BREAKERS, CPT, RELAYS, LIGHTS, SWITCHES, MINI CAS AND RTM ARE MOUNTED IN MCC COMPARTMENTS. RUN INTERCONNECTING WIRING AS FOLLOWS:
   a. VFD TO RTU–7: 2–TSP, 2#16
   b. VFD TO MCC: 10#12, #12G
   c. MCC TO RTU–7: 6#16

FILE: 215786–00E023.dwg
DATE: Oct 06, 2015–4:29:35pm, ranider

HDR Engineering, Inc.

ISSUE	DATE	DESCRIPTION
A	JUNE 2015	ISSUED FOR BID

PROJECT MANAGER	C. OLSON
DESIGNED	W.F. ETTLICH
DESIGNED	
CHECKED	L.D. SMITHEY
DRAWN	E.G. SESPENE
DATE	JUNE 30, 2015
PROJECT NUMBER	215786

REGISTERED PROFESSIONAL ENGINEER WILLIAM F. ETTLICH NO. 07625 EXP. 09/30/16 ELECTRICAL STATE OF CALIFORNIA 06-30-15

CITY OF PINOLE CALIFORNIA 1903

PINOLE/HERCULES
WATER POLLUTION
CONTROL PLANT UPGRADE
CLIENT PN

ELECTRICAL

CONTROL DIAGRAMS 1

0 1" 2"

FILENAME	215786–00E023
SCALE	NONE

SHEET **00E023**

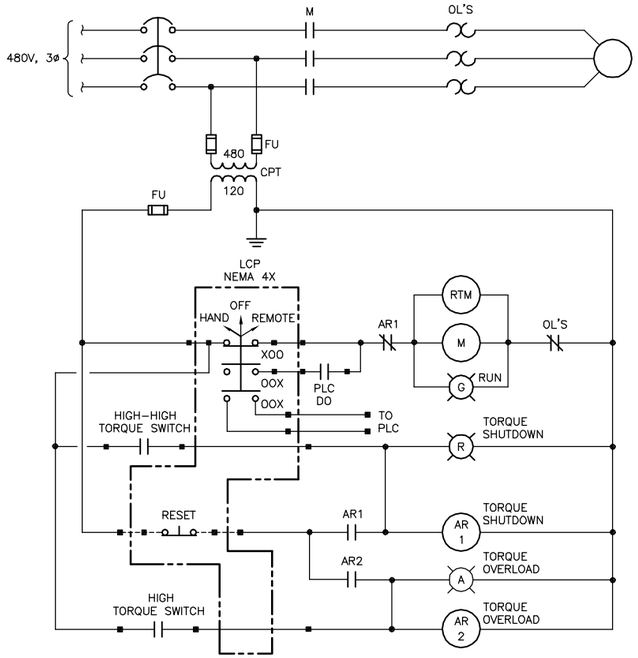

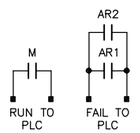

CD-4: PRIMARY/SECONDARY CLARIFIER, THICKENER

NOT TO SCALE

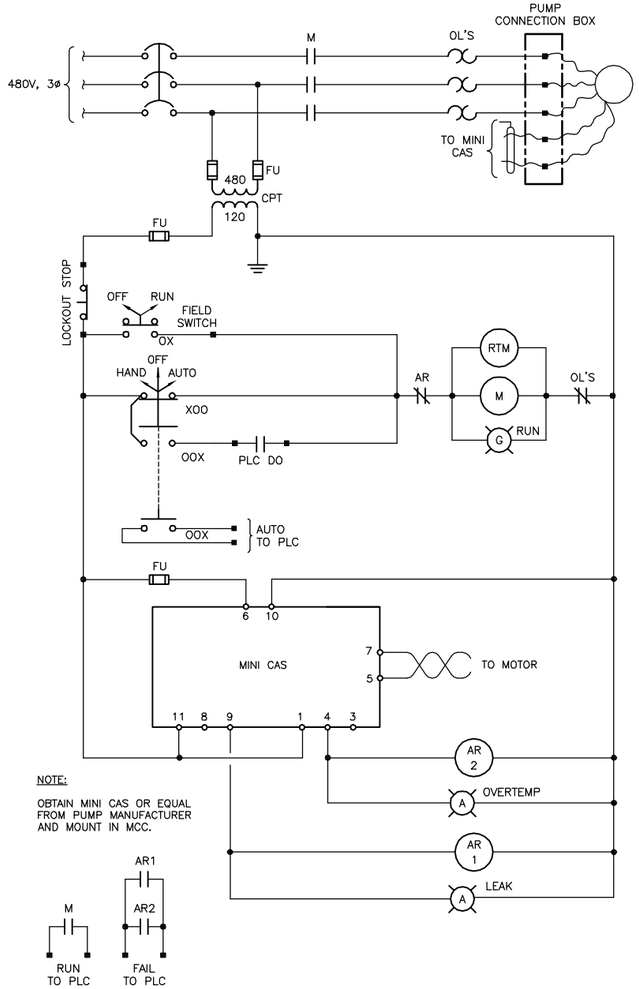

CD-5: SUBMERSIBLE SCUM PUMP

NOT TO SCALE

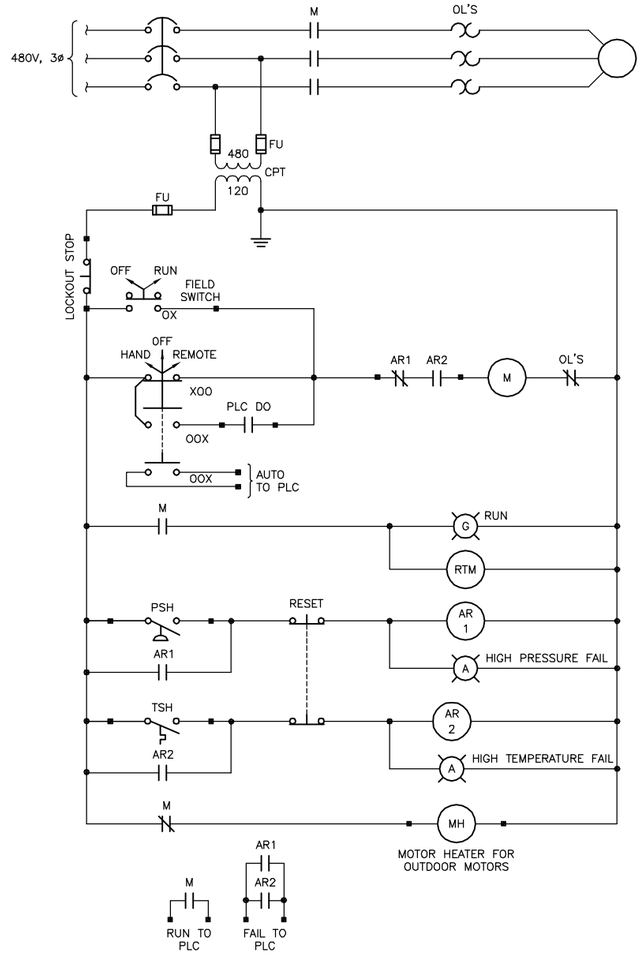

CD-6: SCUM PUMP

NOT TO SCALE

SAME AS CD-5 EXCEPT NO OFF-RUN SWITCH

CD-10: SUBMERSIBLE FIXED SPEED PUMP

NOT TO SCALE

FILE: 215786-00E024.dwg
DATE: Oct 06, 2015-4:29:40pm, rander

HDR Engineering, Inc.

ISSUE	DATE	DESCRIPTION
A	JUNE 2015	ISSUED FOR BID

PROJECT MANAGER	C. OLSON
DESIGNED	W.F. ETTLICH
DESIGNED	
CHECKED	L.D. SMITHEY
DRAWN	E.G. SESPENE
DATE	JUNE 30, 2015
PROJECT NUMBER	215786

REGISTERED PROFESSIONAL ENGINEER
WILLIAM T. ETTLICH
NO. 07625
EXP. 09/30/16
ELECTRICAL
STATE OF CALIFORNIA
06-30-15

CITY OF PINOLE CALIFORNIA 1903

PINOLE/HERCULES
WATER POLLUTION
CONTROL PLANT UPGRADE
CLIENT PN

ELECTRICAL

CONTROL DIAGRAMS 2

0 1" 2"

FILENAME	215786-00E024
SCALE	NONE

SHEET
00E024

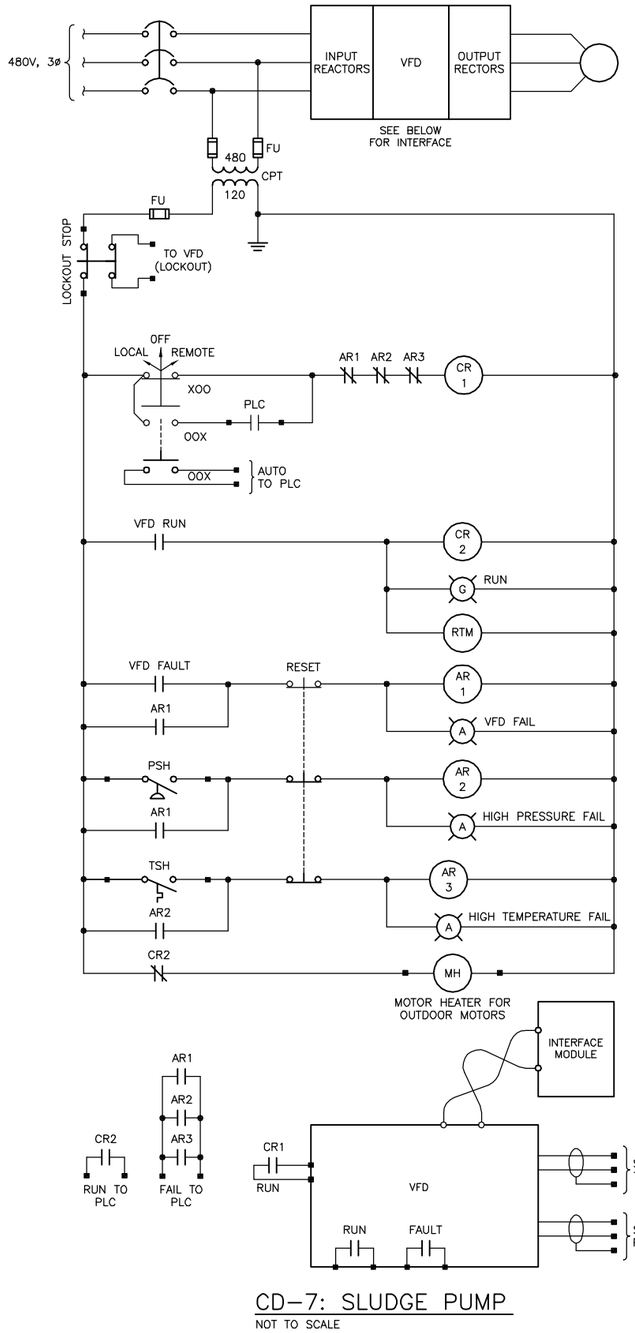

CD–7: SLUDGE PUMP

NOT TO SCALE

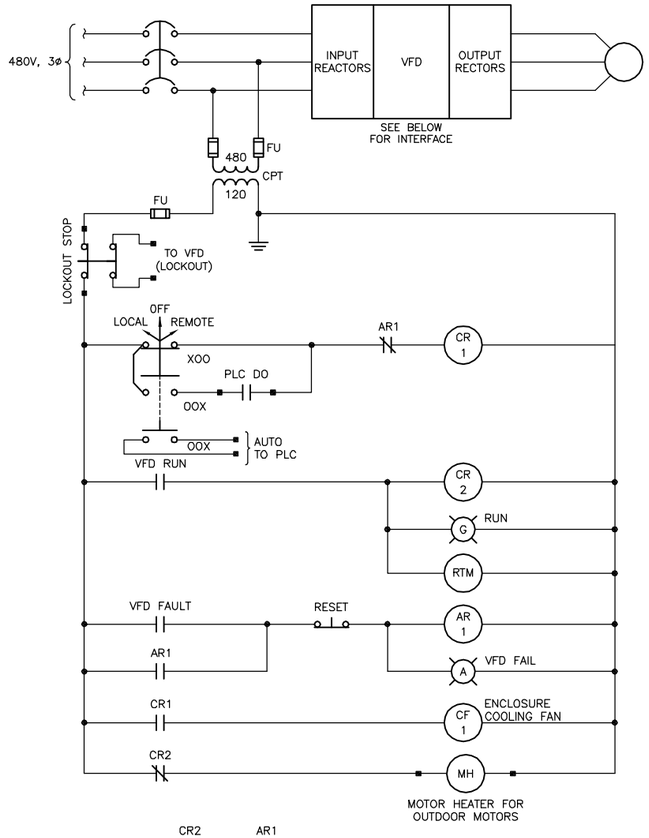

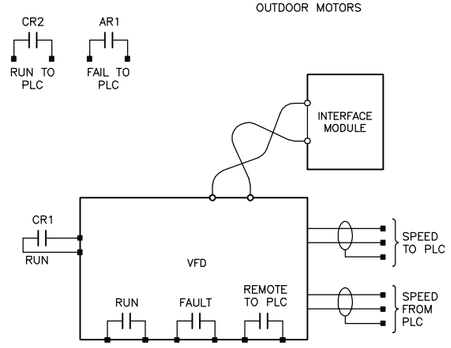

CD–8: VFD PUMP

NOT TO SCALE SEE NOTE 2, 00E023

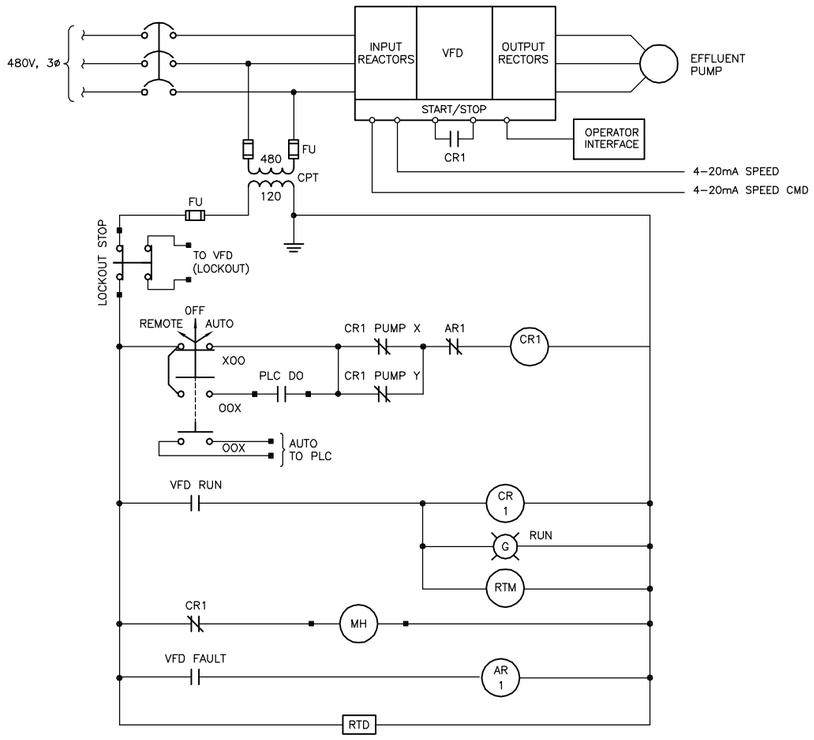

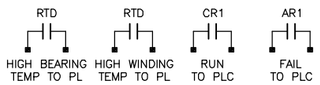

INTERLOCK TABLE
PUMP 1 – X=PUMP 2, Y=PUMP 3
PUMP 2 – X=PUMP 1, Y=PUMP 3
PUMP 3 – X=PUMP 1, Y=PUMP 2

WIRE AND CONNECT PUMP MOTOR WINDING AND BEARING RTD'S, 8 TOTAL

CD–9: EFFLUENT PUMP

NOT TO SCALE

FILE: 215786–00E025.dwg
DATE: Oct 06, 2015–4:29:45pm, ranider

HDR Engineering, Inc.

ISSUE	DATE	DESCRIPTION
A	JUNE 2015	ISSUED FOR BID

PROJECT MANAGER	C. OLSON
DESIGNED	W.F. ETTLICH
DESIGNED	
CHECKED	L.D. SMITHEY
DRAWN	E.G. SESPENE
DATE	JUNE 30, 2015
PROJECT NUMBER	215786

REGISTERED PROFESSIONAL ENGINEER
WILLIAM F. ETTLICH
NO. 07625
EXP. 09/30/16
ELECTRICAL
STATE OF CALIFORNIA
06-30-15

CITY OF PINOLE CALIFORNIA 1903

PINOLE/HERCULES
WATER POLLUTION
CONTROL PLANT UPGRADE
CLIENT PN

ELECTRICAL

CONTROL DIAGRAMS 3

0 1" 2"

FILENAME	215786–00E025
SCALE	NONE

SHEET **00E025**

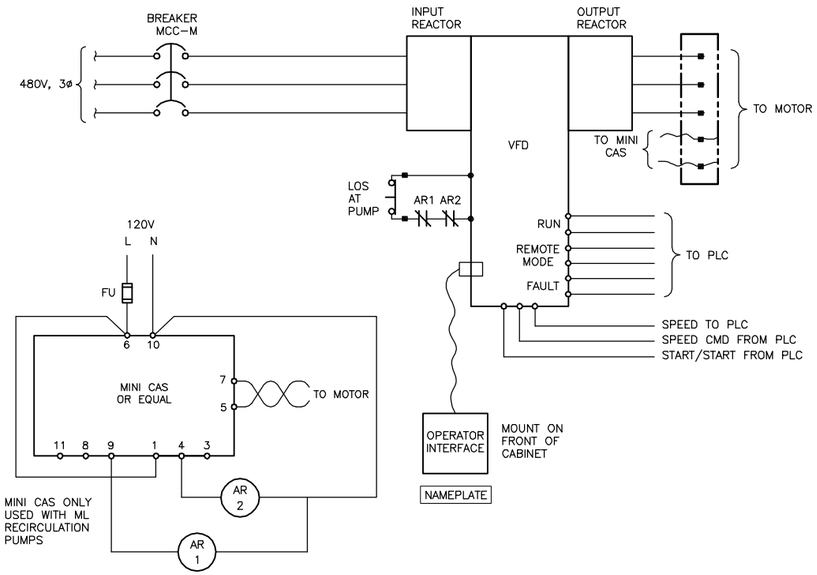

CD–14: RAS, AB RECIRCULATION PUMPS, (VFD DRIVEN)

NOT TO SCALE

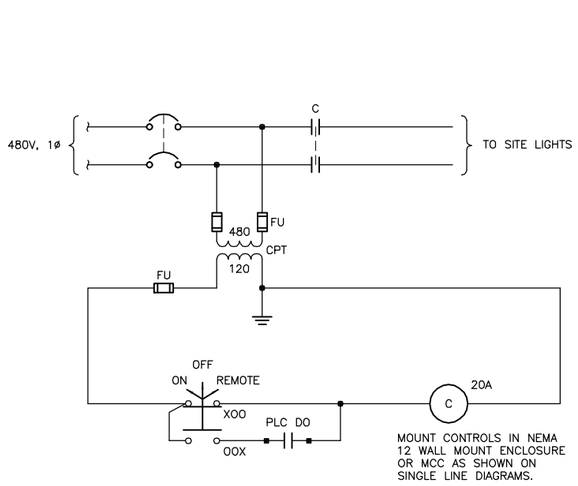

CD11: SITE LIGHT CONTROL

NOT TO SCALE

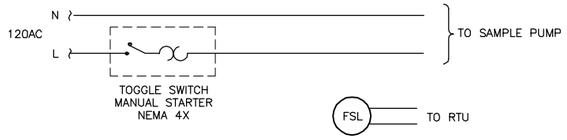

CD12: SINGLE PHASE SAMPLE PUMP

NOT TO SCALE

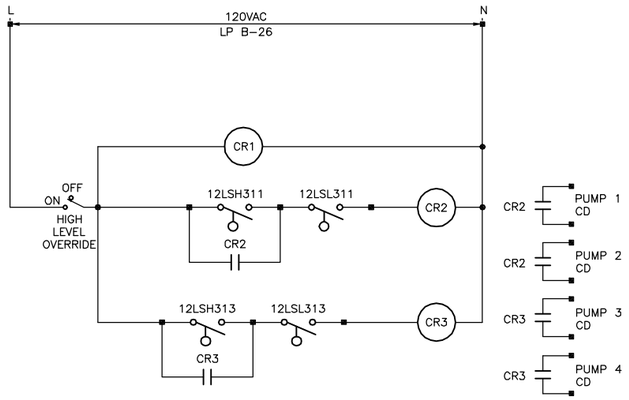

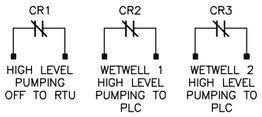

CD13: INFLUENT PUMP HIGH LEVEL CONTROL

NOT TO SCALE

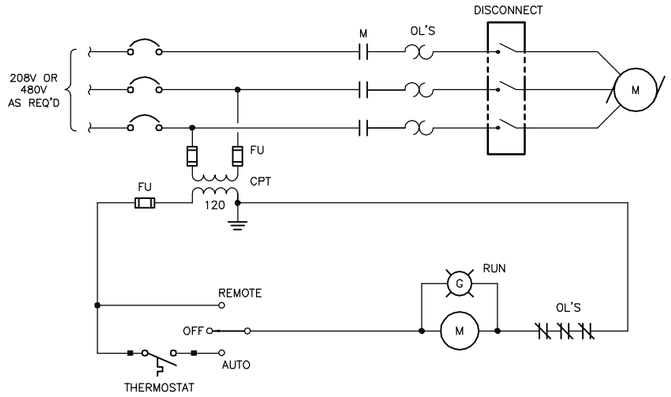

CD–14 EXHAUST FAN

NOT TO SCALE

FILE: 215786–00E026.dwg
DATE: Oct 06, 2015–4:29:50pm, rsnider

HDR Engineering, Inc.

ISSUE	DATE	DESCRIPTION
A	JUNE 2015	ISSUED FOR BID

PROJECT MANAGER	C. OLSON
DESIGNED	W.F. ETTLICH
DESIGNED	
CHECKED	L.D. SMITHEY
DRAWN	E.G. SESPENE
DATE	JUNE 30, 2015
PROJECT NUMBER	215786

REGISTERED PROFESSIONAL ENGINEER
WILLIAM F. ETTLICH
NO. 07625
EXP. 09/30/16
ELECTRICAL
STATE OF CALIFORNIA
06-30-15

CITY OF PINOLE CALIFORNIA 1903

PINOLE/HERCULES
WATER POLLUTION
CONTROL PLANT UPGRADE
CLIENT PN

ELECTRICAL

CONTROL DIAGRAMS 4

0 1" 2"

FILENAME	215786–00E026
SCALE	NONE

SHEET
00E026

PANEL: LP–B (ELECTRICAL BLDG)	FEEDER ENTRANCE:	MOUNTING: WALL MOUNTNG
SERVICE: 120/208V, 3ø, 4W		SERVICE ENTRANCE LABEL:
MAIN DEVICE: 100A MAIN BREAKER		

CKT NO.	CIRCUIT IDENTIFICATION	CB AMPS	VA PER PHASE A	VA PER PHASE B	VA PER PHASE C	CB AMPS	CIRCUIT IDENTIFICATION	CKT NO.
1	LIGHTS	20/1	500			20/1	OUTLETS	2
3	SPARE	20/1	500			20/1	OUTLETS	4
5	GENERATOR BATTERY CHARGER	20/1			100	20/1	SITE LIGHT OUTLETS	6
7	RTU–2	20/1	200		500	30/1	GENERATOR PARALLELING CONT	8
9	RTU–2	20/1		200	200	20/1	FERRIC CHLORIDE FEEDER 1	10
11	76LSH–005	20/1		300		20/1	FERRIC CHLORIDE FEEDER 2	12
13	BISULFITE HEATER (GFI)	15/1	900		100	20/1	PRIMARY CLARIFIER 3 LIGHTS	14
15	BISULFITE HEATER (GFI)	15/1	200	900	300	20/1	PRIMARY CLARIFIER OUTLETS	16
17	SPARE	20/1		500		20/1	PRIMARY CLARIFIER LIGHTS	18
19	HEADWORKS LIGHTS	20/1	500		400	20/1	SAMPLER, 11CS005	20
21	HEADWORKS OUTLETS	20/1	200	500		20/1	SODIUM HYDROXIDE FEEDER 1	22
23	CHLORINE CONTACT CONTROL BUILDING	50/3		300	1000	20/1	SODIUM HYDROXIDE FEEDER 2	24
25			1000		300	20/1	INFLUENT PUMP HIGH LEVEL CD	26
27				1000		20/1	HEAT TAPE, 77LSH105	28
29	72STR008, 72FIT007	20/1		1000	200	20/1	SPARE	30
31	SPARE	20/1				20/1	SPARE	32
33	SPARE	20/1				20/1	SPARE	34
35	SPARE	20/1				20/1	SPARE	36
37	SPARE	20/1				.	SPACE	38
39	SPACE	.				.	SPACE	40
41	SPACE	.				.	SPACE	42
	EST TOTAL VA PER PHASE		4200	5200	2900			
	EST TOTAL PANELBOARD VA				12,300			

PANEL: LP–D (EFFLUENT P.S.)	FEEDER ENTRANCE:	MOUNTING: WALL MOUNTNG
SERVICE: 120/208V, 3ø, 4W		SERVICE ENTRANCE LABEL:
MAIN DEVICE: 100A MAIN BREAKER		

CKT NO.	CIRCUIT IDENTIFICATION	CB AMPS	VA PER PHASE A	VA PER PHASE B	VA PER PHASE C	CB AMPS	CIRCUIT IDENTIFICATION	CKT NO.
1	LIGHTS	20/1	500			20/1	OUTLETS	2
3	GENERATOR BATTERY CHARGER	20/1	500	200		20/1	ANALYZER RACK	4
5	SODIUM HYPOCHLORITE FEEDERS	20/1		500	300	20/1	RTU–8	6
7	SODIUM HYPOCHLORITE FEEDERS	20/1	300		200	30/1	RTU–8	8
9	75LSH–007, 75LSH–107	20/1	200	300		20/1	DAY FUEL TANK	10
11	SPARE	20/1		600		20/1	SURGE TANK LCP	12
13	SODIUM BISULFITE FEEDERS	20/1	300		200	50/2	GENERATOR BLOCK HEATER	14
15	SODIUM BISULFITE FEEDERS	20/1	3000	300				16
17	HYPOCHLORITE VALVE	20/1		3000		20/1	HEAT TAPE (GFI)	18
19	HYPOCHLORITE VALVE	20/1	100		1000	20/1	HEAT TAPE (GFI)	20
21	BISULFITE VALVE	30/1	200	100		20/1	VENTILATION FAN	22
23	BISULFITE VALVE	20/1		200	100	20/1	SAMPLER, 91CS018	24
25	CONTROL VALVE 3	20/1	200		200	20/1	ROLLUP DOOR	26
27	LEVEL TRANSMITTER	20/1	300	100		20/1	MANHOLE PUMP	28
29	3 KW UNIT HEATER	20/2		300	1500	20/1	STRAINER, 92STR006	30
31			1500		200	20/1	SPARE	32
33	SPARE	20/1				20/1	SPARE	34
35	SPARE	30/1				20/1	SPARE	36
37	SPARE	20/1				.	SPACE	38
39	SPARE	20/1				.	SPACE	40
41	SPARE	20/1				.	SPACE	42
	EST TOTAL VA PER PHASE		7100	5600	3800			
	EST TOTAL PANELBOARD VA				16,500			

PANEL: LP–M (SECONDARY AREA)	FEEDER ENTRANCE:	MOUNTING: MCC–M MOUNTNG
SERVICE: 120/208V, 3ø, 4W		SERVICE ENTRANCE LABEL:
MAIN DEVICE: LUGS ONLY		

CKT NO.	CIRCUIT IDENTIFICATION	CB AMPS	VA PER PHASE A	VA PER PHASE B	VA PER PHASE C	CB AMPS	CIRCUIT IDENTIFICATION	CKT NO.
1	LIGHTS	20/1	500			20/1	OUTLETS	2
3	RTU–7	20/1		300		20/1	CLARIFIER 3, 4 & 5 LIGHTS	4
5	RTU–7	20/1		500	300	20/1	CLARIFIER 3, 4 & 5 OUTLETS	6
7	AERATION BASIN OUTLETS	20/1	500		500	20/2	RTU–7 AIR CONDITIONER	8
9	VFD PANEL AIR CONDITIONER	20/2	1500	1500				10
11				1500	1500	20/1	VFD PANEL LIGHT	12
13	AB LIGHTS	20/1	200		200	20/1	VFD PANEL OUTLET	14
15	AB OUTLETS	20/1	500	500		20/1	CLARIFIER 1 & 2 LIGHTS	16
17	WAS FLOW METERS	20/1		400	200	20/1	CLARIFIER 1 & 2 OUTLETS	18
19	AB ANALYZERS	20/1	400		500	20/1	WAS CONTROL VALVES	20
21	AB LIGHTS	20/1		200		20/1	FIT473, 475	22
23	AB OUTLETS	20/1			200	20/1	SAMPLER, 41CS006	24
25	RAS FLOW	20/1	200			20/1	SAMPLER, 21CS004	26
27	RAS FLOW	20/1	200	200		20/1	SPARE	28
29	SPARE	20/1				20/1	SPARE	30
31	SPARE	20/1				20/1	SPARE	32
33	SPACE	.				.	SPACE	34
35	SPACE	.				.	SPACE	36
37	SPACE	.				.	SPACE	38
39	SPACE	.				.	SPACE	40
41	SPACE	.				.	SPACE	42
	EST TOTAL VA PER PHASE		4500	5100	3400			
	EST TOTAL PANELBOARD VA				13,000			

PANEL: LP–N (SOLIDS HANDLING BLDG	FEEDER ENTRANCE: FEEDER	MOUNTING: WALL MOUNTNG
SERVICE: 120/208V, 3ø, 4W	SERVICE ENTRANCE LABEL: LABEL	
MAIN DEVICE: 100A MAIN BREAKER		

CKT NO.	CIRCUIT IDENTIFICATION	CB AMPS	VA PER PHASE A	VA PER PHASE B	VA PER PHASE C	CB AMPS	CIRCUIT IDENTIFICATION	CKT NO.
1	LIGHTS	20/1	700			20/1	OUTLETS	2
3	AB LIGHT OUTLETS	20/1	500	500		20/1	THICKENER LIGHTS	4
5	RTU–4	20/1		200	300	20/1	THICKENER OUTLETS	6
7	RTU–4	20/1	300		500	20/1	AB ANALYZERS	8
9	THICKENER POLYMER 1	20/1	500	300		20/1	OUTLETS	10
11	THICKENER POLYMER 2	20/1		500	300	20/1	DEWATERING LIGHTS	12
13	LIGHTS	20/1	500		700	20/1	DEWATERING OUTLETS	14
15	HEAT TAPE (GFI)	20/1	500	500		20/1	DEWATERING POLYMER 1	16
17	HEAT TAPE (GFI)	20/1		300	500	20/1	DEWATERING POLYMER 2	18
19	SPARE	20/1	400		300	20/1	POLYMER LIGHTS	20
21	SPARE	30/1		500		20/1	POLYMER OUTLETS	22
23	SPARE	20/1				20/1	SPARE	24
25	SPARE	20/1				20/1	SPARE	26
27	SPARE	20/1				20/1	SPARE	28
29	SPARE	20/1				20/1	SPARE	30
31	SPACE	.				.	SPACE	32
33	SPACE	.				.	SPACE	34
35	SPACE	.				.	SPACE	36
37	SPACE	.				.	SPACE	38
39	SPACE	.				.	SPACE	40
41	SPACE	.				.	SPACE	42
	EST TOTAL VA PER PHASE		3400	2800	2600			
	EST TOTAL PANELBOARD VA				8,800			

PANEL: LP–S (MAINTENANCE SHOP)	FEEDER ENTRANCE: FEEDER	MOUNTING: WALL MOUNTNG
SERVICE: 120/208V, 3ø, 4W	SERVICE ENTRANCE LABEL: LABEL	
MAIN DEVICE: 100A MAIN BREAKER		

CKT NO.	CIRCUIT IDENTIFICATION	CB AMPS	VA PER PHASE A	VA PER PHASE B	VA PER PHASE C	CB AMPS	CIRCUIT IDENTIFICATION	CKT NO.
1	LIGHTS	20/1	1000			20/1	OUTLETS	2
3	208V OUTLET	20/3	500	500		20/1	OUTLETS	4
5				500	500	20/1	OUTLETS	6
7			500		500	30/1	OUTLETS	8
9	208V OUTLET	20/3	500	500		20/1	OUTLETS	10
11				500	500	20/1	SPARE	12
13			500	200		20/1	SAMPLER, 11CS003	14
15	208V OUTLET	20/3	200	500		20/1	SAMPLER, 11CS004	16
17				200	500	20/3	EXHAUST FAN	18
19			500		500			20
21	AIR COMPRESSOR	30/3	500	2000				22
23				500	2000	20/1	SPARE	24
25			2000			20/1	SPARE	26
27	SPARE	20/1				20/1	SPARE	28
29	SPARE	20/1				.	SPACE	30
31	SPACE	.				.	SPACE	32
33	SPACE	.				.	SPACE	34
35	SPACE	.				.	SPACE	36
37	SPACE	.				.	SPACE	38
39	SPACE	.				.	SPACE	40
41	SPACE	.				.	SPACE	42
	EST TOTAL VA PER PHASE		6200	5200	4500			
	EST TOTAL PANELBOARD VA				15,900			

PANEL: LP–C (BLOWER BLDG)	FEEDER ENTRANCE: FEEDER	MOUNTING: WALL MOUNTNG
SERVICE: 120/208V, 3ø, 4W	SERVICE ENTRANCE LABEL: LABEL	
MAIN DEVICE: .		

CKT NO.	CIRCUIT IDENTIFICATION	CB AMPS	VA PER PHASE A	VA PER PHASE B	VA PER PHASE C	CB AMPS	CIRCUIT IDENTIFICATION	CKT NO.
1	LIGHTS	20/1	500			20/1	OUTLETS	2
3	LIGHTS	20/1		500		20/1	OUTLETS	4
5	CO–GEN RELAYS	20/1		500	200	20/1	OUTLETS	6
7	GEN BATTERY CHARGER	20/1	300		500	20/1	DIESEL DAY TANK	8
9	EXHAUST FAN	20/1	500	500		20/1	RTU–3	10
11	SPARE	20/1		200		20/1	RTU–3	12
13	SPARE	20/1			200	20/1	SPARE	14
15	SPARE	20/1				20/1	SPARE	16
17	SPARE	20/1				20/1	SPARE	18
19	SPARE	20/1				20/1	SPARE	20
21	SPARE	30/1				20/1	SPARE	22
23	SPARE	20/1				20/1	SPARE	24
25	SPARE	20/1				20/1	SPARE	26
27	SPACE	.				.	SPACE	28
29	SPACE	.				.	SPACE	30
31	SPACE	.				.	SPACE	32
33	SPACE	.				.	SPACE	34
35	SPACE	.				.	SPACE	36
37	SPACE	.				.	SPACE	38
39	SPACE	.				.	SPACE	40
41	SPACE	.				.		42
	EST TOTAL VA PER PHASE		1800	1700	900			
	EST TOTAL PANELBOARD VA				4,400			

FILE: 215786–00E030.dwg
DATE: Oct 06, 2015–4:29:55pm, rsnider

HDR Engineering, Inc.

ISSUE	DATE	DESCRIPTION
A	JUNE 2015	ISSUED FOR BID

PROJECT MANAGER	C. OLSON
DESIGNED	W.F. ETTLICH
DESIGNED	
CHECKED	L.D. SMITHEY
DRAWN	E.G. SESPENE
DATE	JUNE 30, 2015
PROJECT NUMBER	215786

REGISTERED PROFESSIONAL ENGINEER
WILLIAM F. ETTLICH
NO. 07625
EXP. 09/30/16
ELECTRICAL
STATE OF CALIFORNIA
06-30-15

CITY OF PINOLE CALIFORNIA 1903

PINOLE/HERCULES
WATER POLLUTION
CONTROL PLANT UPGRADE
CLIENT PN

ELECTRICAL

SCHEDULES

0 1" 2"

FILENAME	215786–00E030
SCALE	AS NOTED

SHEET **00E030**

PANEL: LP-BA, NEMA 3R		FEEDER ENTRANCE: FEEDER			MOUNTING: PEDESTAL OUTDOORS		
SERVICE: 120/208V, 3ø, 4W					SERVICE ENTRANCE LABEL: YES		
MAIN DEVICE: 50A CIRCUIT BREAKER							
CKT NO.	CIRCUIT IDENTIFICATION	CB AMPS	VA PER PHASE A	VA PER PHASE B	VA PER PHASE C	CB AMPS	CIRCUIT IDENTIFICATION	CKT NO.
1	CHLORINE CONTACT CNTL BLDG	20/1	300/500			20/1	SAMPLE PUMP 71PMP013	2
3	CHLORINE CONTACT CNTL BLDG	20/1		300/500		20/1	SAMPLE PUMP 71PMP014	4
5	RTU-9	20/1			200/200	20/1	72STR003, 72FIT007	6
7	SAMPLE PUMP, 71PMP017	20/1	500/500			30/1	SAMPLE PUMP, 71PMP015	8
9	SAMPLE PUMP, 71PMP018	20/1		500/500		20/1	SAMPLE PUMP, 71PMP016	10
11	TANK HEATER (GFI)	20/1			500/200	20/1	SAMPLER, 71CS019	12
13	SPARE	20/1				20/1	SPARE	14
15	SPARE	20/1				20/1	SPARE	16
17	SPARE	20/1				20/1	SPARE	18
19	SPACE	.				.	SPACE	20
21	SPACE	.				.	SPACE	22
23	SPACE	.				.	SPACE	24
	EST TOTAL VA PER PHASE		1800	1800	1100			
	EST TOTAL PANELBOARD VA				4,700			

PANEL: LP-PW		FEEDER ENTRANCE: BOTTOM			MOUNTING: SURFACE		
SERVICE: 120/208V, 3ø, 4W					SERVICE ENTRANCE LABEL: YES		
MAIN DEVICE: 50A CIRCUIT BREAKER							
CKT NO.	CIRCUIT IDENTIFICATION	CB AMPS	VA PER PHASE A	VA PER PHASE B	VA PER PHASE C	CB AMPS	CIRCUIT IDENTIFICATION	CKT NO.
1	LIGHTS	20/1	1000/500			20/1	OULETS	2
3	SPARE	20/1				20/1	OUTLETS	4
5	SPARE	20/1				20/1	VENTILATION	6
7	SPARE	20/1				30/1	SPARE	8
9	SPACE	.				20/1	SPARE	10
11	SPACE	.				20/1	SPARE	12
13	SPACE	.				20/1	SPARE	14
15	SPACE	.				20/1	SPARE	16
17	SPACE	.				20/1	SPARE	18
19	SPACE	.				.	SPACE	20
21	SPACE	.				.	SPACE	22
23	SPACE	.				.	SPACE	24
	EST TOTAL VA PER PHASE		1500	500	500			
	EST TOTAL PANELBOARD VA				2,500			

LIGHTING FIXTURE SCHEDULE

TYPE	MANUFACTURER AND # OR APPROVED EQUAL	MOUNTING	USE
A	2 EACH – PHILIPS GPLM-180W 98LED4K-LE4-480-002-NPW/RSAR-1A-NP	30' DUAL MAST ARM, SQUARE TAPERED STEEL POLE, GALVANIZED OR ALUMINUM POWDER COAT FINISH	SITE LIGHT
B	LITHONIA DSXOLED 70030K T5W120SPADDBXD	10' SQUARE STRAIGHT STEEL POLE, BRONZE FINISH	POST LIGHT
C	LITHONIA 2 ALLS448EZB LP835 N80	SURFACE	SURFACE MOUNT
D	LITHONIA TWHLED 20C1000 50KT3M MVOLT DDBXD	WALL BRACKET	WALL WASHER
E	LITHONIA EU2LEDM12	WALL MOUNT	EMERGENCY LIGHT
F	LITHONIA FEM4LED4L/57 IMAFL 120	PENDANT OR SURFACE	WET AREA LIGHT

PULLBOX SCHEDULE
PULLBOXES, DEPTH MINIMUM 30"

TAG	POWER (L"xW")	CONTROLS (L"XW")
1	12x24	12x24
2	18x30	12x24
3	24x30	24x30
4	24x30	24x30
5	24x30	12x24
6	24x30	24x30
7	24x30	24x30
8	18x30	18x30
9	24x30	12x24
10	12x24	12x24
11	12x24	12x24
12	24x30	24x30
13	24x30	24x30
14	18x30	18x24
15	18x30	18x24

SIZES SHOWN ARE MINIMUM, CONTRACTOR MAY INCREASE SIZE.

FILE: 215786-00E031.dwg
DATE: Oct 06, 2015-4:30:00pm, rsnider

HDR Engineering, Inc.

ISSUE	DATE	DESCRIPTION
A	JUNE 2015	ISSUED FOR BID

PROJECT MANAGER	C. OLSON
DESIGNED	W.F. ETTLICH
DESIGNED	
CHECKED	L.D. SMITHEY
DRAWN	E.G. SESPENE
DATE	JUNE 30, 2015
PROJECT NUMBER	215786

REGISTERED PROFESSIONAL ENGINEER
WILLIAM F. ETTLICH
NO. 07625
EXP. 09/30/16
ELECTRICAL
STATE OF CALIFORNIA
06-30-15

CITY OF PINOLE CALIFORNIA 1903

PINOLE/HERCULES
WATER POLLUTION
CONTROL PLANT UPGRADE
CLIENT PN

ELECTRICAL

SCHEDULES

0 1" 2"

FILENAME	215786-00E031
SCALE	NONE

SHEET
00E031

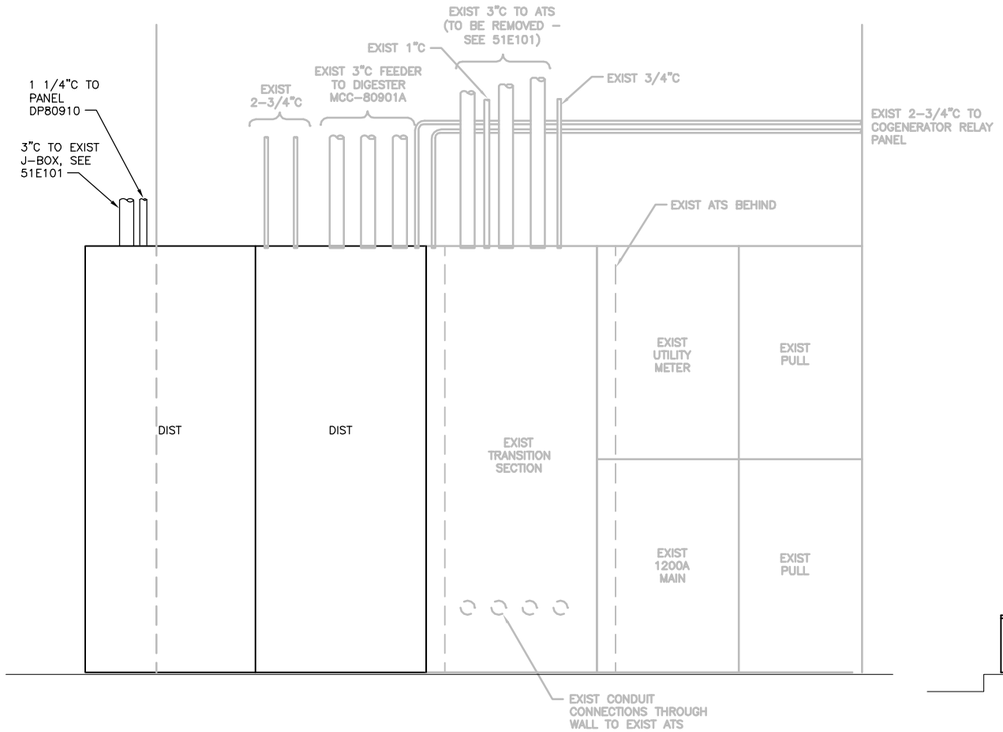

SWBD 5101 LAYOUT

SCALE: 3/4" = 1'-0"

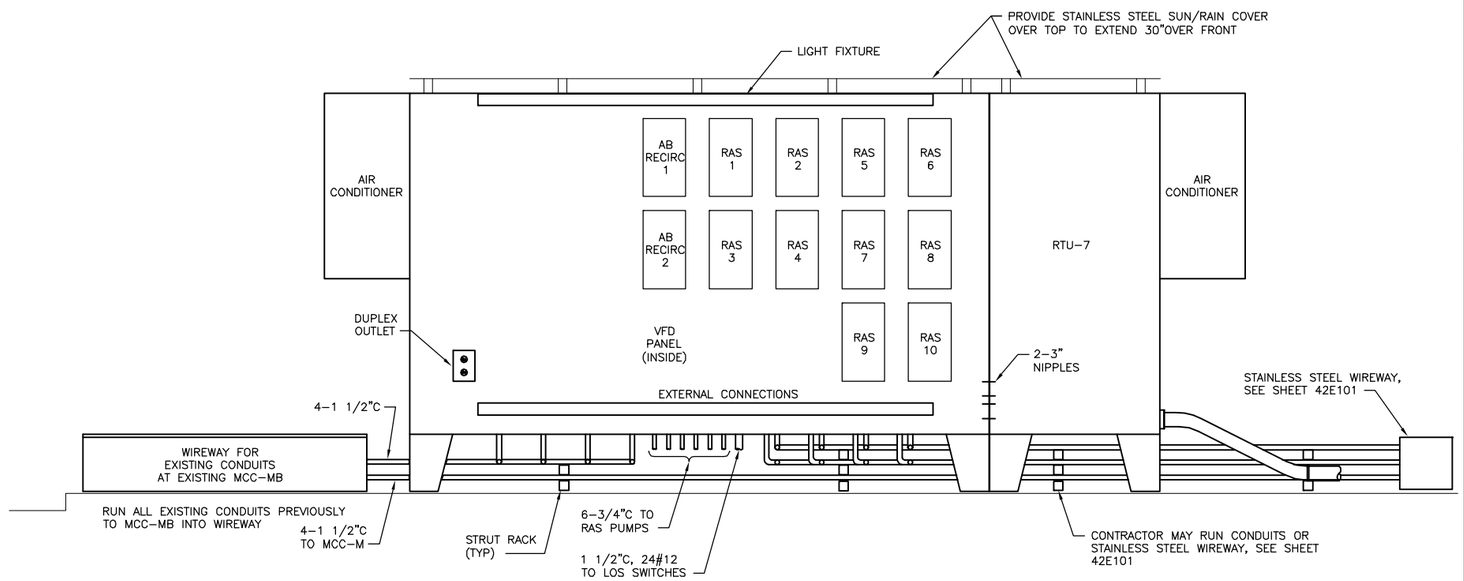

SECONDARY AREA VFD PANEL LAYOUT

SCALE: 3/4" = 1'-0"

FILE: 215786-00E033.dwg
DATE: Oct 06, 2015-4:30:05pm, ranider

HDR Engineering, Inc.

ISSUE	DATE	DESCRIPTION
A	JUNE 2015	ISSUED FOR BID

PROJECT MANAGER	C. OLSON
DESIGNED	W.F. ETTLICH
DESIGNED	
CHECKED	L.D. SMITHEY
DRAWN	E.G. SESPENE
DATE	JUNE 30, 2015
PROJECT NUMBER	215786

REGISTERED PROFESSIONAL ENGINEER
WILLIAM F. ETTLICH
NO. 07625
EXP. 09/30/16
ELECTRICAL
STATE OF CALIFORNIA
06-30-15

CITY OF PINOLE CALIFORNIA 1903

PINOLE/HERCULES
WATER POLLUTION
CONTROL PLANT UPGRADE
CLIENT PN

ELECTRICAL

EQUIPMENT LAYOUT/DETAILS

0 1" 2"

FILENAME	215786-00E033
SCALE	AS SHOWN

SHEET
00E033

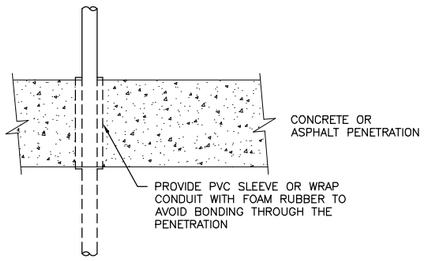

ANTI–BONDING UNDERGROUND CONDUIT
NTS

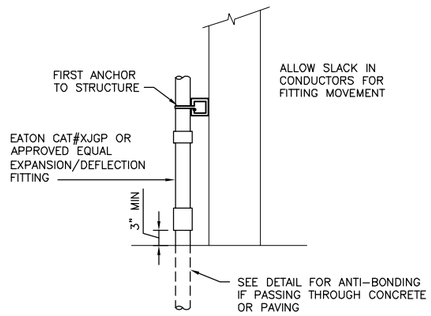

CONDUIT DIFFERENTIAL SETTLEMENT FLEXIBILITY
NTS

REQUIRED FOR EACH CONDUIT
FROM UNDERGROUND AND
ATTACHED TO A STRUCTURE

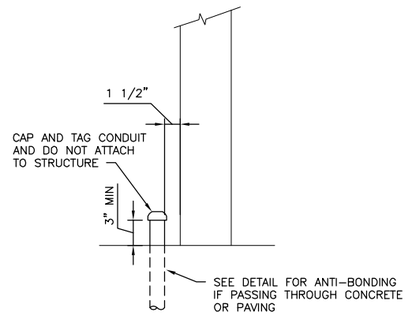

SPARE CONDUIT STUB UP
NTS

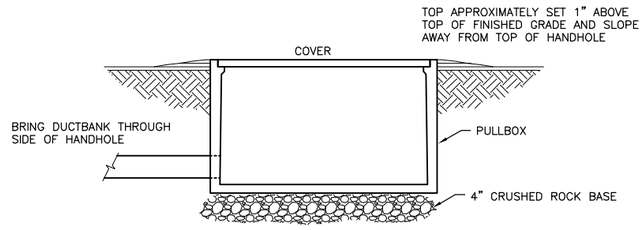

PULLBOX INSTALLATION DETAIL
NTS

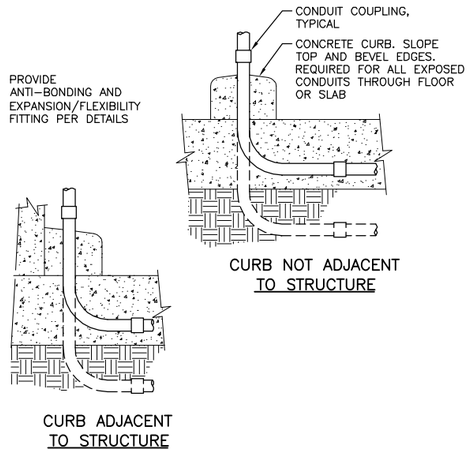

CURB NOT ADJACENT
TO STRUCTURE

CURB ADJACENT
TO STRUCTURE

CONDUIT CURB
NTS

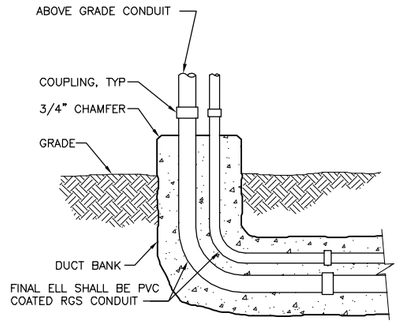

NOTE:
1. SEE DUCT BANK SECTION DETAIL FOR ADDITIONAL REQUIREMENTS.

CONDUIT TRANSITION TO ABOVE GRADE (EXTERIOR)
NTS

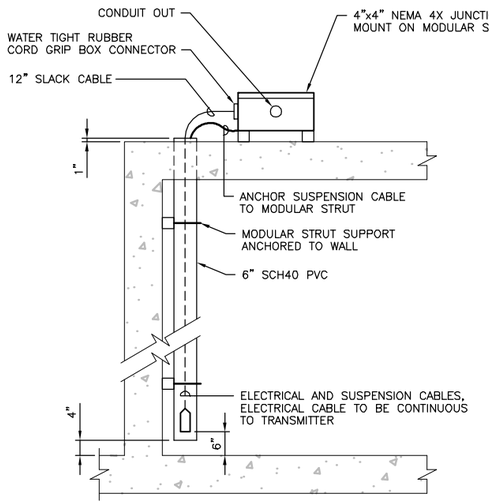

SUBMERSIBLE LEVEL TRANSMITTER
NTS

FILE: 215786–00E034.dwg
DATE: Oct 06, 2015–4:30:10pm, rsnider

HDR Engineering, Inc.

ISSUE	DATE	DESCRIPTION
A	JUNE 2015	ISSUED FOR BID

PROJECT MANAGER	C. OLSON
DESIGNED	W.F. ETTLICH
DESIGNED	
CHECKED	L.D. SMITHEY
DRAWN	E.G. SESPENE
DATE	JUNE 30, 2015
PROJECT NUMBER	215786

REGISTERED PROFESSIONAL ENGINEER
WILLIAM F. ETTLICH
NO. 07625
EXP. 09/30/16
ELECTRICAL
STATE OF CALIFORNIA

CITY OF PINOLE CALIFORNIA 1903

PINOLE/HERCULES
WATER POLLUTION
CONTROL PLANT UPGRADE
CLIENT PN

ELECTRICAL

DETAILS

0 1" 2"

FILENAME	215786–00E034
SCALE	AS SHOWN

SHEET
00E034

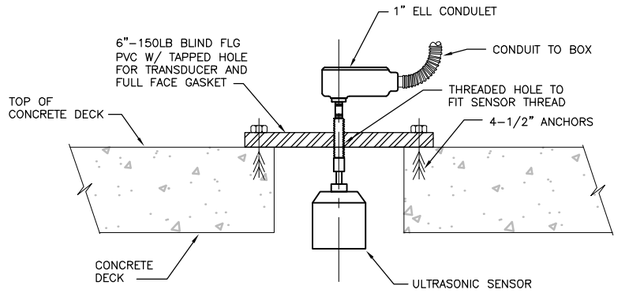

NOTES:

1. CONTRACTOR SHALL VERIFY SIZE OF PENETRATION IN THE CONCRETE TO ACCOMODATE INSTRUMENT INSTALLATION.
2. CONTRACTOR SHALL VERIFY THERE ARE NO VERTICAL OBSTRUCTIONS FOR THE SIGNAL PATH.

STRUCTURE MOUNTING

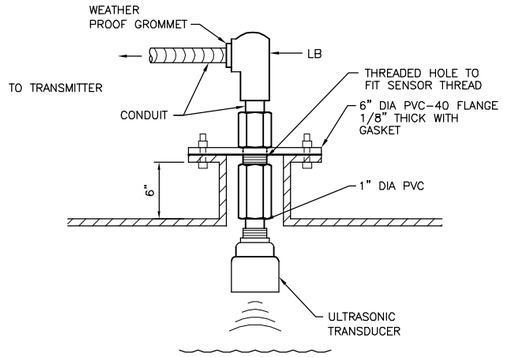

NOTES:

1. PROVIDE FLANGE FOR TRANSDUCER AND INSTALL TRANSDUCER.
2. ALLOW ADEQUATE SLACK IN FLEX CONDUIT AND MANUFACTURER SUPPLIED CABLE TO ALLOW REMOVAL OF TRANSDUCER ASSEMBLY FROM SLEEVE.

ULTRASONIC TRANSDUCER TANK MOUNTING

NTS

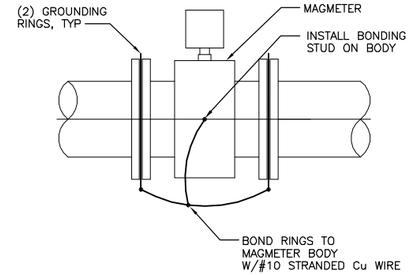

MAGNETIC FLOW METER INSTALLATION

NTS

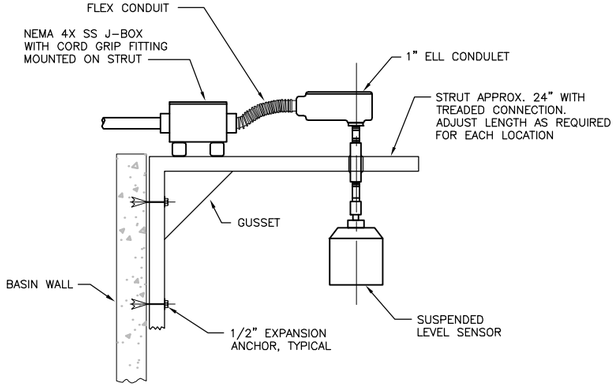

ULTRASONIC LEVEL SENSOR INSTALLATION – WALL

NTS

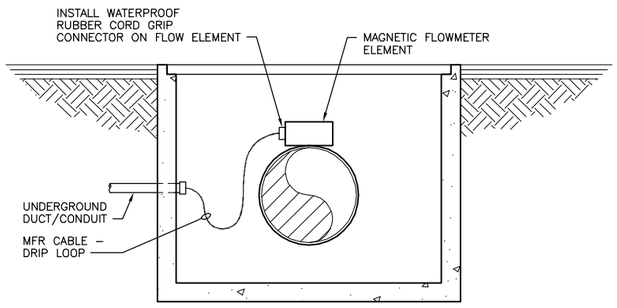

FLOWMETER INSTALLATION IN VAULT

NTS

FOR DIRECT BURIED METER PROVIDE WATER PROOF CONNECTIONS TO THE TERMINAL BOX.

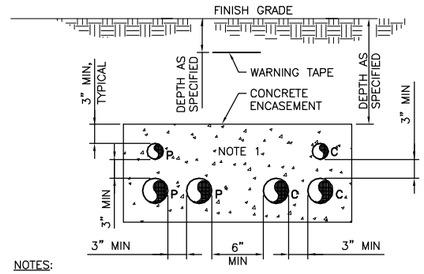

NOTES:

1. NUMBER OF CONDUITS AS REQUIRED FOR THE APPLICATION.
2. P SUBSCRIPT ELECTRICAL POWER OR CONTROL CONDUIT.
3. C SUBSCRIPT COMMUNICATION (TELEPHONE, DATA, INSTRUMENTATION) CONDUIT.

CONCRETE ENCASED DUCT BANK SECTION

NTS

FILE: 215786-00E035.dwg
DATE: Oct 06, 2015-4:30:15pm, rainder

HDR Engineering, Inc.

ISSUE	DATE	DESCRIPTION
A	JUNE 2015	ISSUED FOR BID

PROJECT MANAGER	C. OLSON
DESIGNED	W.F. ETTLICH
DESIGNED	
CHECKED	L.D. SMITHEY
DRAWN	E.G. SESPENE
DATE	JUNE 30, 2015
PROJECT NUMBER	215786

REGISTERED PROFESSIONAL ENGINEER
WILLIAM F. ETTLICH
NO. 07625
EXP. 09/30/16
ELECTRICAL
STATE OF CALIFORNIA
06-30-15

CITY OF PINOLE CALIFORNIA 1903

PINOLE/HERCULES WATER POLLUTION CONTROL PLANT UPGRADE
CLIENT PN

ELECTRICAL

DETAILS

0 1" 2"

FILENAME	215786-00E035
SCALE	AS SHOWN

SHEET **00E035**

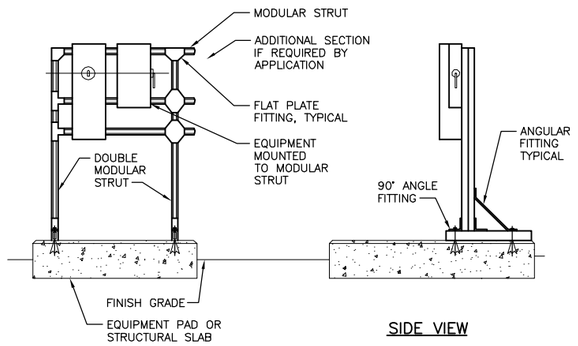

FRONT VIEW

SIDE VIEW

NOTES:

1. COMBINED EQUIPMENT LOADS PER 36" SPAN SHALL NOT EXCEED 500 LBS.
2. PROVIDE GROUNDING FOR OUTDOOR INSTALLATIONS. HOT DIPPED GALVANIZED AFTER FABRICATION.
3. ANCHORS: STAINLESS STEEL, 1/2" DIAMETER, 3 1/2" EMBEDMENT.
4. PROTECT SURFACES WITH DISSIMILAR MATERTIALS IN ACCORDANCE WITH SPECIFICATION 09905.

MODULAR EQUIPMENT RACK
NTS

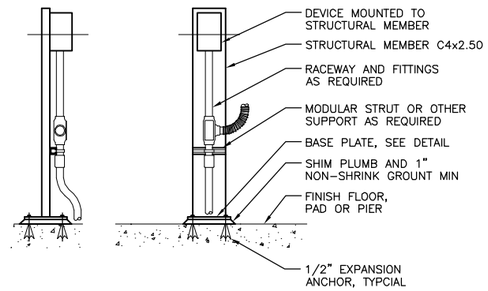

SIDE VIEW FRONT VIEW

SINGLE DEVICE PEDESTAL
NTS

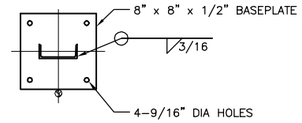

BASE PLATE PLAN VIEW

NOTES:

1. EQUIPMENT LOAD SHALL NOT EXCEED 50 LBS.
2. PEDESTAL ASSEMBLY MATERIAL TYPE: ALUMINUM.
3. ANCHORS: STAINLESS STEEL, 1/2" DIAMETER, 3 1/2" EMBEDMENT.
4. ATTACH MODULAR STRUT TO STRUCTURAL MEMBER WITH A MINIMUM OF TWO 3/8" DIAMTER STAINLESS STEEL ROUND HEAD MACHINE SCREWS WITH LOCK WASHER AND NUT.
5. PROTECT SURFACES WITH DISSIMILAR MATERIALS IN ACCORDANCE WITH SPECIFICATION 09905.

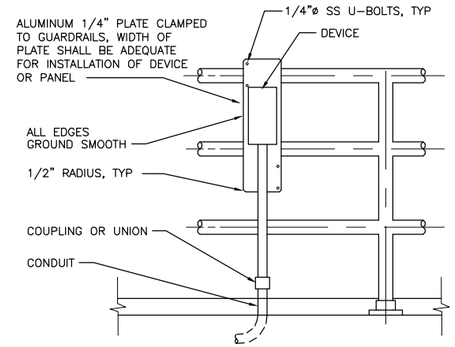

NOTE:
GUARDRAIL SHOWN DIAGRAMMATICALLY.

GUARDRAIL MOUNTED DEVICE
NTS

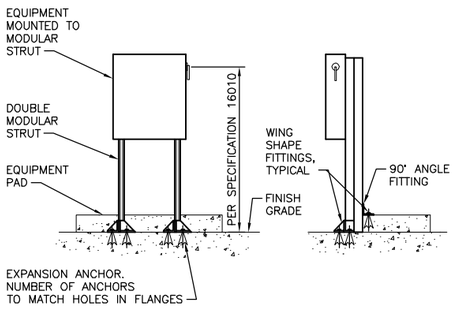

FRONT VIEW SIDE VIEW

NOTES:

1. EQUIPMENT LOAD SHALL NOT EXCEED 200 LBS.
2. HOT DIPPED GALVANIZED AFTER FABRICATION.
3. ANCHORS: STAINLESS STEEL, 3/8" DIAMETER, 3 1/2" EMBEDMENT.
4. PROTECT SURFACES WITH DISSIMILAR MATERIALS IN ACCORDANCE WITH SPECIFICATION 09905.

MODULAR SUPPORT STRUCTURE RACK
NTS

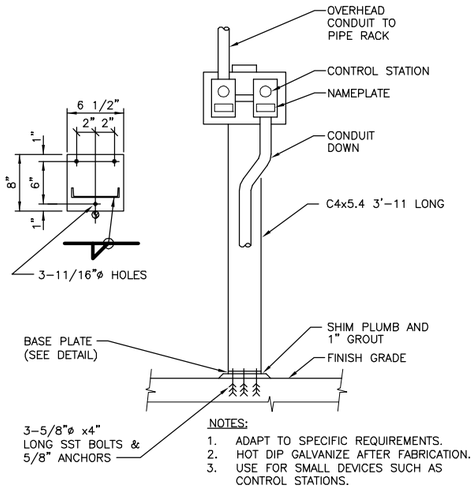

NOTES:

1. ADAPT TO SPECIFIC REQUIREMENTS.
2. HOT DIP GALVANIZE AFTER FABRICATION.
3. USE FOR SMALL DEVICES SUCH AS CONTROL STATIONS.

PEDESTAL MOUNTED CONTROL STATION
NTS

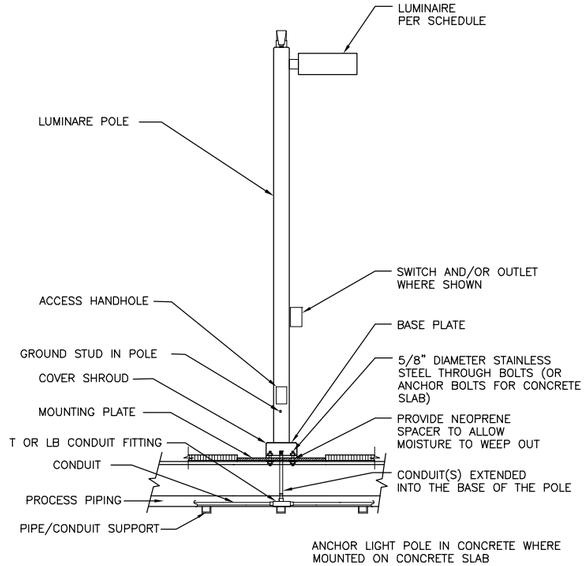

ANCHOR LIGHT POLE IN CONCRETE WHERE MOUNTED ON CONCRETE SLAB

PLATE OR CONCRETE MOUNTED LIGHT POLE BASE
NTS

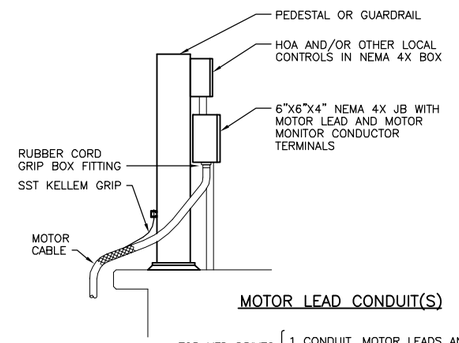

MOTOR LEAD CONDUIT(S)

FOR VFD DRIVES { 1 CONDUIT, MOTOR LEADS AND GROUIND; 1 CONDUIT TSP PLUS CONTROL

NON VFD DRIVES – 1 CONDUIT WITH MOTOR LEADS, GROUND, TSP AND CONTROL LEADS

SUBMERSIBLE PUMP/MIXER CONNECTION DETAIL
NTS
TYPICAL FOR ALL SUBMERSIBLE DRIVES

FILE: 215786-00E036.dwg
DATE: Oct 06, 2015-4:30:20pm, rsnider

HDR Engineering, Inc.

ISSUE	DATE	DESCRIPTION
A	JUNE 2015	ISSUED FOR BID

PROJECT MANAGER	C. OLSON
DESIGNED	W.F. ETTLICH
DESIGNED	
CHECKED	L.D. SMITHEY
DRAWN	E.G. SESPENE
DATE	JUNE 30, 2015
PROJECT NUMBER	215786

REGISTERED PROFESSIONAL ENGINEER WILLIAM F. ETTLICH NO. 07625 EXP. 09/30/16 ELECTRICAL STATE OF CALIFORNIA 06-30-15

CITY OF PINOLE CALIFORNIA 1903

PINOLE/HERCULES WATER POLLUTION CONTROL PLANT UPGRADE CLIENT PN

ELECTRICAL

DETAILS

0 1" 2"

FILENAME	215786-00E036
SCALE	AS SHOWN

SHEET **00E036**

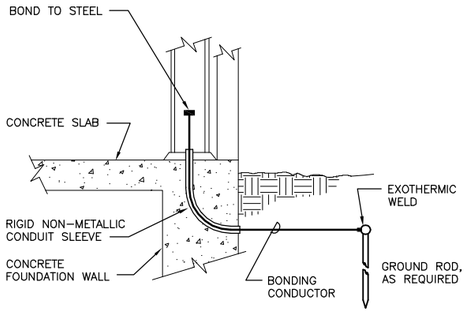

NOTE: ALL CANOPY COLUMNS AND OUTDOOR PANELS ARE TO BE GROUNDED PER THIS DETAIL.

COLUMN GROUND CONNECTION
NTS

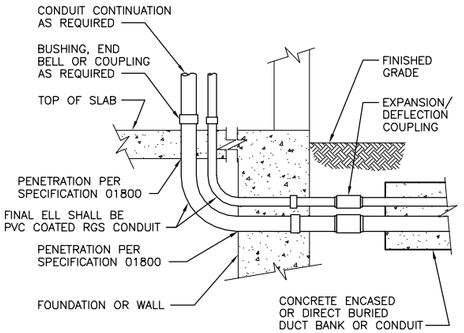

NOTE:
1. SEE DUCT BANK DETAIL FOR ADDITIONAL REQUIREMENTS.

CONDUIT TRANSITION TO ABOVE GRADE (EXTERIOR TO INTERIOR)
NTS

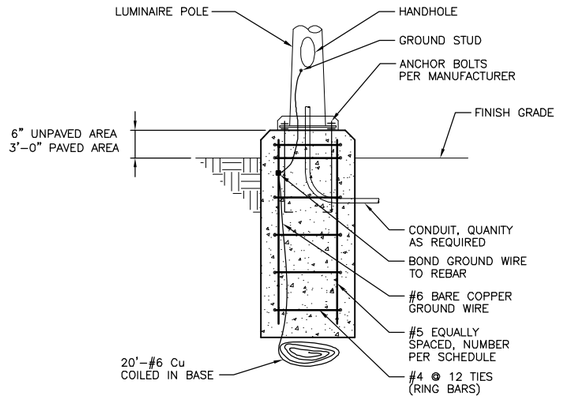

DIMENSION SCHEDULE			
POLE HEIGHT	MINIMUM D	MINIMUM H	VERTICAL REBAR EACH
UP TO 10'	2'-0"	4'-6"	6
11' TO 20'	2'-0"	6'-6"	6
21' TO 30'	2'-0"	8'-6"	6

LIGHT POLE FOUNDATION
NTS

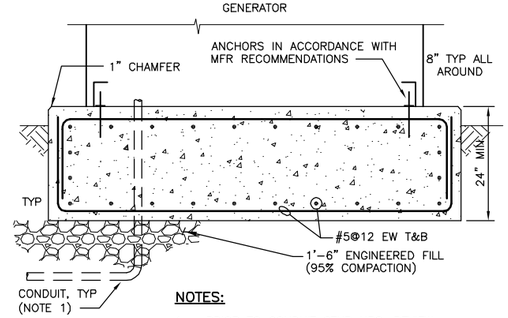

NOTES:

1. PRIOR TO CONDUIT STUB UPS, REVIEW GENERATOR SUBMITTAL FOR ACTUAL LOCATIONS OF ALL ELECTRICAL CONNECTIONS.

GENERATOR PAD
NTS

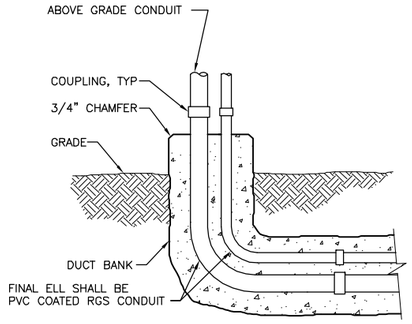

NOTE:
1. SEE DUCT BANK SECTION DETAIL FOR ADDITIONAL REQUIREMENTS.

CONDUIT TRANSITION TO ABOVE GRADE (EXTERIOR)
NTS

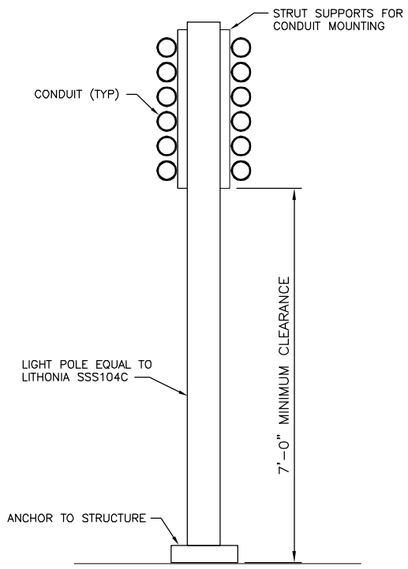

CONTRACTOR TO LAYOUT THE OVERHEAD CONDUIT SUPPORT AND MAY APPLY VARIATIONS TO ACCOMPLISH THE SAME END RESULT

OVERHEAD CONDUIT SUPPORT
NTS

FILE: 215786-00E037.dwg
DATE: Oct 06, 2015-4:30:26pm, rsnider

HDR Engineering, Inc.

ISSUE	DATE	DESCRIPTION
A	JUNE 2015	ISSUED FOR BID

PROJECT MANAGER	C. OLSON
DESIGNED	W.F. ETTLICH
DESIGNED	
CHECKED	L.D. SMITHEY
DRAWN	E.G. SESPENE
DATE	JUNE 30, 2015
PROJECT NUMBER	215786

REGISTERED PROFESSIONAL ENGINEER
WILLIAM F. ETTLICH
NO. 07625
EXP. 09/30/16
ELECTRICAL
STATE OF CALIFORNIA

CITY OF PINOLE CALIFORNIA 1903

PINOLE/HERCULES
WATER POLLUTION
CONTROL PLANT UPGRADE
CLIENT PN

ELECTRICAL

DETAILS

0 1" 2"

FILENAME	215786-00E037
SCALE	AS SHOWN

SHEET
00E037

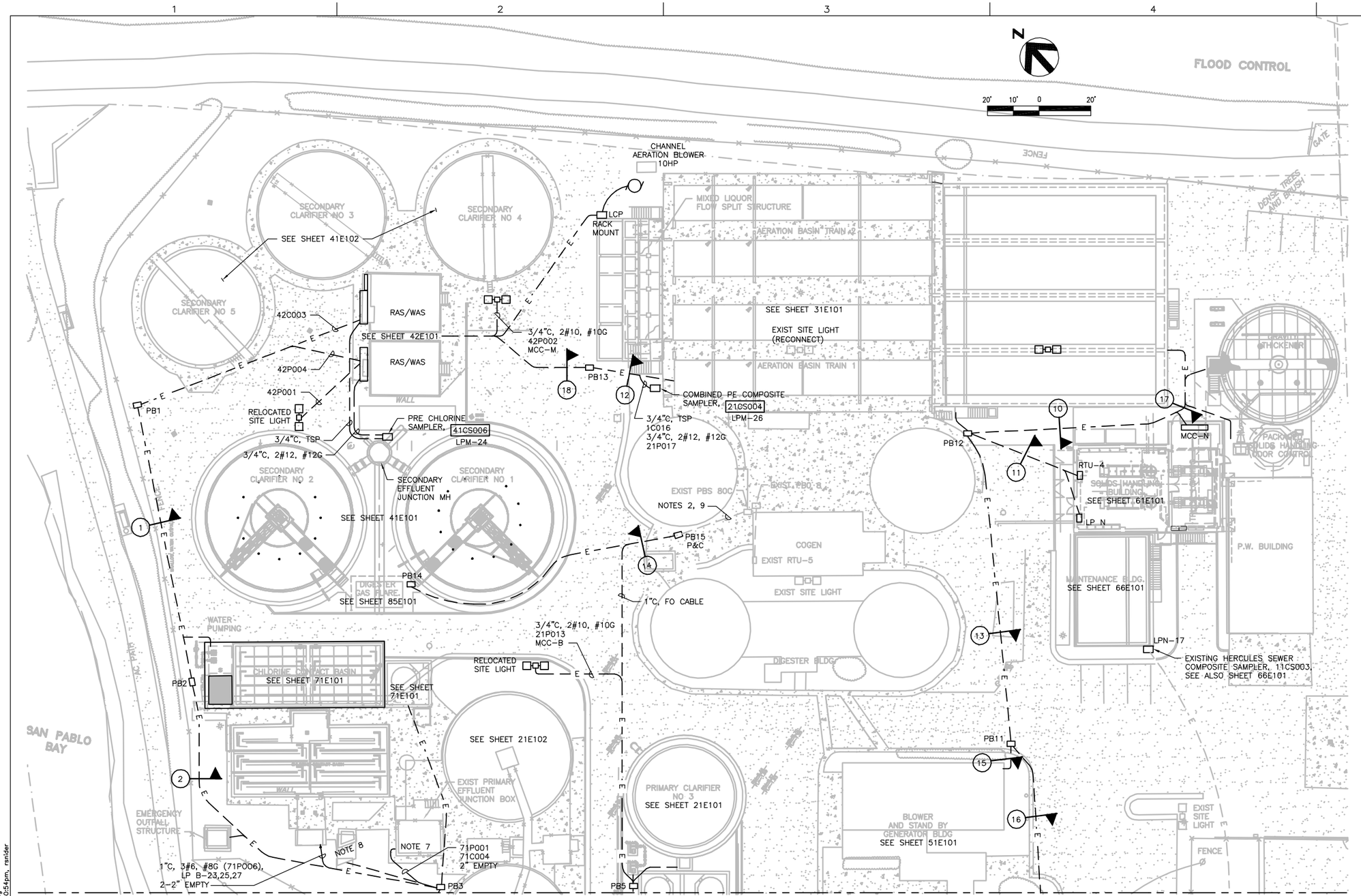

NOTES:

1. ALL STRUCTURES ARE CONSTRUCTED ON PILES AND DUCT BANKS MUST BE ROUTED BETWEEN PILES FOR CONNECTION TO STRUCTURE EQUIPMENT.
2. BREAK INTO EXISTING DUCTBANK, INSTALL PULL BOX AND EXTEND AS SHOWN. PULL CONDUCTORS AS SHOWN TO TERMINATION IN COGEN BUILDING AND TERMINATE.
3. ALL PULL BOXES TO BE 18"x24"x24" DEEP UNLESS OTHERWISE SHOWN. DIVIDE EMPTY CONDUITS EVENLY BETWEEN POWER AND CONTROL PULL BOXES. WHERE "P&C" IS SHOWN FOR A PULL BOX PROVIDE 2 PULL BOXES ONE FOR POWER AND ONE FOR CONTROL.
4. SEE SHEET 00E105 FOR UNDERGROUND DUCT BANK SCHEDULE.
5. ALL SITE LIGHTS FIXTURE TYPE 1, SEE SHEET 00E031 FOR SCHEDULE.
6. EXISTING SITE LIGHTS MAY BE RE USED.
7. RACK MOUNT CHLORINE INDUCTOR LCP AND CONNECT CHLORINE INDUCTOR TO LCP.
8. EXISTING SITE LIGHTS ARE TYPE A AND NEW SITE LIGHTS ARE TO MATCH PER LIGHTING FIXTURE SCHEDULE ON SHEET 00E031.
9. RUN FO CABLE IN EXISTING DUCT AND CONDUITS TO RTU-5 AND CONNECT

MATCHLINE AA – FOR CONTINUATION SEE DWG 00E104

FILE: 215786-00E103.dwg
DATE: Oct 06, 2015-4:30:54pm, rsnider

HDR Engineering, Inc.

ISSUE	DATE	DESCRIPTION
A	JUNE 2015	ISSUED FOR BID

PROJECT MANAGER	C. OLSON
DESIGNED	W.F. ETTLICH
DESIGNED	
CHECKED	L.D. SMITHEY
DRAWN	E.G. SESPENE
DATE	JUNE 30, 2015
PROJECT NUMBER	215786

REGISTERED PROFESSIONAL ENGINEER WILLIAM F. ETTLICH NO. 07625 EXP. 09/30/16 ELECTRICAL STATE OF CALIFORNIA

CITY OF PINOLE CALIFORNIA 1903

PINOLE/HERCULES
WATER POLLUTION
CONTROL PLANT UPGRADE
CLIENT PN

ELECTRICAL

SITE PLAN
NORTH PLANT

0 1" 2"

FILENAME	215786-00E103
SCALE	AS NOTED

SHEET **00E103**

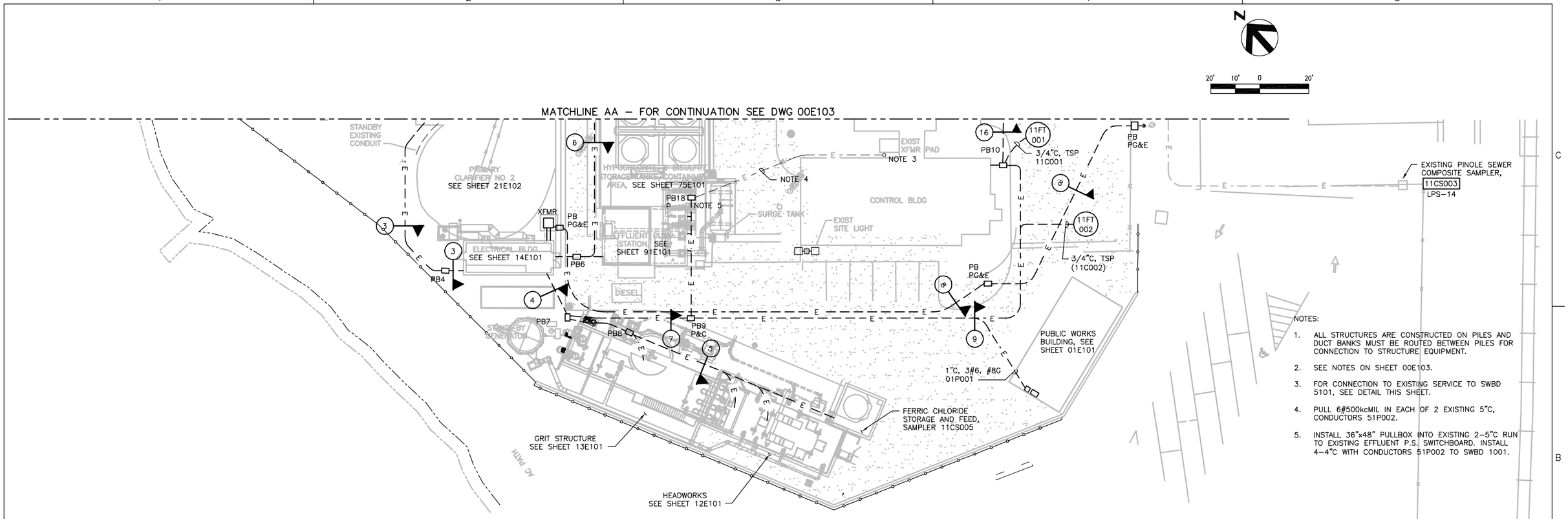

NOTES:

1. ALL STRUCTURES ARE CONSTRUCTED ON PILES AND DUCT BANKS MUST BE ROUTED BETWEEN PILES FOR CONNECTION TO STRUCTURE EQUIPMENT.
2. SEE NOTES ON SHEET 00E103.
3. FOR CONNECTION TO EXISTING SERVICE TO SWBD 5101, SEE DETAIL THIS SHEET.
4. PULL 6#500kcMIL IN EACH OF 2 EXISTING 5"C, CONDUCTORS 51P002.
5. INSTALL 36"x48" PULLBOX INTO EXISTING 2–5"C RUN TO EXISTING EFFLUENT P.S. SWITCHBOARD. INSTALL 4–4"C WITH CONDUCTORS 51P002 TO SWBD 1001.

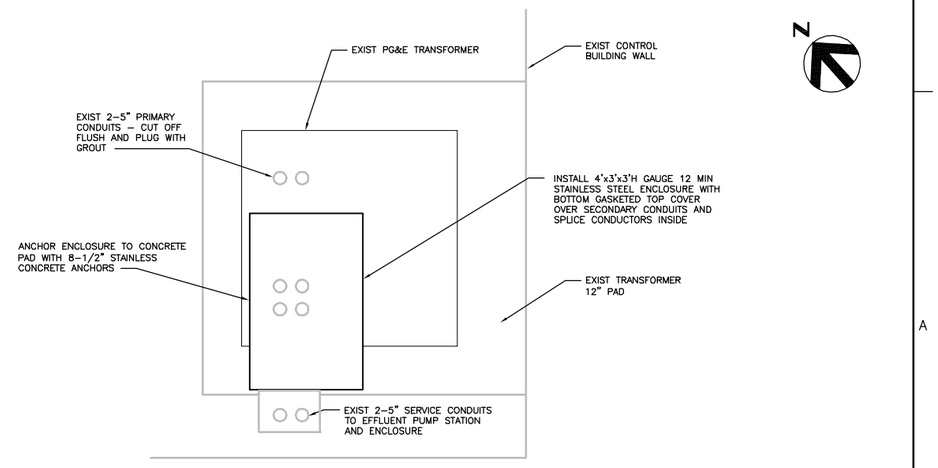

EXISTING TRANSFORMER PAD DETAIL

SCALE: 1/2" = 1'–0"

FILE: 215786–00E104.dwg
DATE: Oct 06, 2015–4:31:07pm, rander

HDR Engineering, Inc.

ISSUE	DATE	DESCRIPTION
A	JUNE 2015	ISSUED FOR BID

PROJECT MANAGER	C. OLSON
DESIGNED	W.F. ETTLICH
DESIGNED	
CHECKED	L.D. SMITHEY
DRAWN	E.G. SESPENE
DATE	JUNE 30, 2015
PROJECT NUMBER	215786

REGISTERED PROFESSIONAL ENGINEER WILLIAM F. ETTLICH NO. 07625 EXP. 09/30/16 ELECTRICAL STATE OF CALIFORNIA 06-30-15

CITY OF PINOLE CALIFORNIA 1903

PINOLE/HERCULES WATER POLLUTION CONTROL PLANT UPGRADE CLIENT PN

ELECTRICAL

SITE PLAN SOUTH PLANT

0 1" 2"

FILENAME	215786–00E104
SCALE	AS NOTED

SHEET **00E104**

DUCTBANK SCHEDULE

SECTION	DUCT SIZE, IN	CONDUCTOR FILL
1	1	42C003
	3	42P004
	3–2"	EMPTY (1–RTU–7, 2–MCC–M)
2	2	42C003, 72C004
	3	42P004
	1 1/2	72P001, 72P002
	3/4	72P003
	4–2"	EMPTY
3	3	42C003, 72C004, 71C002, 71C004, 71C006, 71C007, 77C003, 21C004
	3	42P004
	1	72P002
	3/4	71P001
	1	71P006
	3/4	77P001
	3/4	77P002
	3/4	21P001
	1 1/2	21P002, 21P003
	3/4	21P005
	1	21P006
	1 1/2	21P007, 21P008
	8–2"	EMPTY
4	1 1/2	76C001
	3/4	76P002
	2	11C003
	3/4	12P001
	1	01P001
	3/4	12P004
	1	12P005
	3/4	12P008
	2	12C009, 12C007, 12C006, 12C002, 12C003
	1 1/4	12P010
	1 1/4	12P011
	1 1/4	12P012
	1 1/4	12P013
	1 1/2	12C014
	1 1/2	12C015

DUCTBANK SCHEDULE (continue)

SECTION	DUCT SIZE, IN	CONDUCTOR FILL
	3/4	12P016
	3/4	13P001
	2	13C002
	1 1/2	13P003, 13P004, 13C007, 13C010, 91C010
	3/4	13P005
	3/4	13P006
	1	13P008
	1	13P009
	3/4	91P009
	6–2"	EMPTY (STUB UP AT HEADWORKS)
5	1 1/2	76C001
	3/4	76P002
	1	12P001, 12P004
	1	12C002, 12C003
	1	12P005
	1	12C006
	3/4	12C007
	3/4	12P008
	1 1/4	12C009
	1 1/4	12P010
	1 1/4	12P011
	1 1/4	12P012
	1 1/4	12P013
	1 1/2	12C014
	1 1/2	12C015
	3/4	12P016
	2–2"	EMPTY
6	1	21P009
	3/4	21P010
	1	21P011, 12P012
	3/4	21P013
	3/4	21C014
	1	21P015
	1	75P005, 75P006, 75P007
	1	FO CABLE (RTU–5)
	4–2"	EMPTY
7	1	01P001
	1	11C001, 11C002
	2	11C003
	2–3"	91P001
	2–3"	91P002
	2–3"	91P003
	1	91C004

DUCTBANK SCHEDULE (continue)

SECTION	DUCT SIZE, IN	CONDUCTOR FILL
	3–4"	51P002
	6–2"	EMPTY (STUB UP AT EFFLUENT PUMPS)
8	2–5"	PG&E PRIMARY
9	1	01P001
	1	11C001, 11C002
	2	11C003
	4–2"	EMPTY
10	3/4	31C002
	3/4	31C004
	3/4	31P008
	3/4	31P007
	2 1/2	31C009
	3/4	31P010
	3	61P002
	3/4	31C010
	3/4	61P011
	3/4	61C012
	3/4	61P008
	6–2"	EMPTY (3 STUB UPS AT AB, 3 TO MCC–N)
11	1	61C001
	3/4	31C002
	3/4	31C004
	3/4	31P010
	3/4	61P008
	3/4	61C010
	3/4	61P011
	3/4	61C012
	4–2"	EMPTY (2 STUB UPS TO RTU–4, 2 TO LP–N)
12	3/4	21C016
	3/4	21P017
	3/4	32C001
	1	32P002
	1 1/4	32C003
	1	32P004
	3/4	31P011
	3/4	31P012
	1 1/2	31P013
	1 1/2	31P014
	1	31P015
	1 1/2	31C016
	2	31C017
	1 1/4	31C018
	6–2"	EMPTY
13	3	31C009
	1	61C001
	3	61P002
	6–2"	EMPTY
14		SEE 85E101
	1	FO CABLE TO RTU–5

DUCTBANK SCHEDULES (continue)

SECTION	DUCT SIZE, IN	CONDUCTOR FILL
15	3	31C009
	1	51C001
	3	61P002
	3–2"	EMPTY (STUB UP AT BUILDING)
16	2	61C001, 51C001
	6–2"	EMPTY
17	3/4	31P010
	3/4	61C003
	3/4	61P004
	3/4	61P005
	1	61P006
	1	61P007
	3/4	61P008
	1	61P009
	3/4	61C010
	3/4	61P011
	4–2"	EMPTY (2–MCC–N, 2–RTU–4)
18	3/4	21C016
	3/4	21P017
	3/4	32C001
	1	32P002, 31P012
	1 1/4	32C003
	1	32P004, 31P011
	1 1/2	31P013
	1 1/2	31P014
	1	31P015
	1 1/2	31C016
	2	31C017
	1 1/4	31C018
	6–2"	EMPTY

NOTES:

1. THE TAGGING SYSTEM IS SET UP TO IDENTIFY CONDUCTORS IN UNDERGROUND DUCT BANKS. OTHER CONDUCTORS DO NOT HAVE TAG NUMBERS ASSIGNED.
2. TAG ALL CONDUCTOR GROUPS IN PULL BOXES WITH THE ASSIGNED TAG NUMBERS. CONDUCTORS WITHOUT ASSIGNED NUMBERS SHALL BE TAGGED AT THE DESTINATION (MCC, RTU, ETC) WITH THE FIELD EQUIPMENT TAG ASSOCIATED WITH THE CONDUCTORS.
3. TAG NUMBER PREFIX IS THE PLANT AREA AND THE SUFFIX IS A SEQUENTIAL NUMBER: P = POWER, C = CONTROL.

FILE: 215786–00E105.dwg
DATE: Oct 06, 2015–4:31:13pm, rsnider

HDR Engineering, Inc.

ISSUE	DATE	DESCRIPTION
A	JUNE 2015	ISSUED FOR BID

PROJECT MANAGER	C. OLSON
DESIGNED	W.F. ETTLICH
DESIGNED	
CHECKED	L.D. SMITHEY
DRAWN	E.G. SESPENE
DATE	JUNE 30, 2015
PROJECT NUMBER	215786

REGISTERED PROFESSIONAL ENGINEER
WILLIAM F. ETTLICH
NO. 07625
EXP. 09/30/16
ELECTRICAL
STATE OF CALIFORNIA
06-30-15

CITY OF PINOLE CALIFORNIA 1903

PINOLE/HERCULES
WATER POLLUTION
CONTROL PLANT UPGRADE
CLIENT PN

ELECTRICAL

DUCTBANK SCHEDULES

0 1" 2"

FILENAME	215786–00E105
SCALE	NONE

SHEET **00E105**

CONDUCTOR SCHEDULE

CONDUCTOR TAG	CONDUCTRS	FROM	TO
01P001	3#6, #8G	PW BUILDING	SWBD-1001
11C001	TSP	11FT-001	RTU-2
11C002	TSP	11FT-002	RTU-2
11C003	5-FO CABLE	RTU-2	SCADA CENTRAL
12P001	3#12, #12G	12PPS101	MCC B
12C002	4#16	12PPS101	RTU-2
12C003	4#16	12PPS102	MCC B
12P004	3#12, #12G	12PPS102	MCC B
12P005	3#12, #12G, 8#12	12CVR003	MCC-B
12C006	2 TSP	12LT004, 12LT005	RTU-2
12C007	4#16	12WC006	RTU-2
12P008	3#10, #10G	12WC006	MCC B
12C009	2 TSP, 8#12	12LSH313, 12LT310, 12LSH311, 12LSL313 12LT312, 12LSL311	RTU-2
12P010	3#3, #6G	12PMP301	MCC B
12P011	3#3, #6G	12PMP302	MCC B
12P012	3#3, #6G	12PMP303	MCC B
12P013	3#3, #6G	12PMP304	MCC B
12C014	4TSP, 16#12	RAW SEWAGE PUMPS	MCC B
12C015	6#12, 28#16	GATE ACTUATOR	RTU-2
12C016	3#10, #10G	GATE ACTUATOR	SWBD 1001
13P001	3#8, #10G	12VGR003	MCC B
13C002	6#16	12VGR003	RTU-2
13P003	3#10, #10G, 2#12	14PMP001	MCC B
13P004	3#10, #10G, 2#12	14PMP002	MCC B
13P005	4#12, #12G	LIGHTS AND OUTLETS	LP B
13P006	3#12, #12G	MOTORIZED GATES	MCC B
13C007	14#16	MOTORIZED GATES	RTU-2
13P008	4#10, 2#10G	SITE LIGHT	MCC B
13P009	3#8, #10G	1305001	SWBD 1001
13C010	6#16	1305001	RTU-2
14C001	F.O. CABLE	RTU-2	SCADA CENTRAL
21P001	2#10, #10G	SITE LIGHT	MCC B
21P002	3#12, #12G, 10#12	21C001	MCC B
21P003	3#12, #12G, 10#12	21C002	MCC B
21C004	TSP	23LT005	RTU-2
21P005	3#10, #10G	LIGHTS AND OUTLETS	LP B
21P006	3#10, #10G, 6#12	23PMP001	MCC B
21P007	3#8, #10G, 4#12	25PMP001	MCC B
21P008	3#8, #10G, 4#12	25PMP002	MCC B
21P009	3#12, #12G, 10#12	21C003	MCC B
21P010	3#10, #10G	12C003	LP B
21P011	3#8, #10G, 2#12	25PMP004	MCC B
21P012	3#8, #10G, 2#12	25PMP003	MCC B
21P013	2#10, #10G	SITE LIGHT	MCC B
21C014	TSP	23LT006	RTU-2
21P015	3#10, #10G, 4#12, TSP	23PMP002	MCC B
21C016	TSP	SAMPLER, 21CS004	RTU-7
21P017	2#12, #12G	SAMPLER, 21CS004	LPM

CONDUCTOR SCHEDULE (continue)

CONDUCTOR TAG	CONDUCTRS	FROM	TO
31P007	2#10, #10G	ANALYZER OUTLETS	LP N
31P008	3#10, #10G	DO CONTROL VALVES	MCC N
31C009	18TSP, 12#16	DO CONTROLS AND VALVES	RTU-3
31P010	4#10, 2#10G	LIGHTS	MCC N, LP N
31P011	2#10, #10G	AB ANALYZER OUTLETS	LP M
31P012	3#10, #10G	AB GATE ACTUATORS POWER	MCC M
31P013	6#10, 2#10G, 2TSP, 2#16	AB MIXERS	MCC M
31P014	6#10, 2#10G, 2TSP, 2#16	AB MIXERS	MCC M
31P015	6#10, 2#10G	AB ML RECIRC PUMPS	MCC M
31C016	8TSP	AB ANALYZERS	MCC M
31C017	12#12, 18#16	AB GATE ACTUATORS	RTU-7
31C018	2TSP, 8#12	AB RECIRC PUMPS	MCC M
32C001	2-MFR CABLE	AB RAS FLOW	RTU-7
32P002	2#12, #12G	AB RAS VALVES	MCC M
32C003	9#12, 18#14	AB RAS VALVES	RTU-7
32P004	3#10, #10G	LIGHTS	LP M
42P001	2#10, #10G	SITE LIGHTS	MCC M
42P002	2#10, #10G	SITE LIGHTS	MCC M
42C003	F.O. CABLE	RTU-7	SCADA CENTRAL
42P004	3-300kcMIL, #4G	MCC M	SWBD 1001
51C001	F.O. CABLE	RTU-3	SCADA CENTRAL
51P002	12-500kcMIL	SWBD 1001	SWBD 5101
61C001	F.O. CABLE	RTU-4	SCADA CENTRAL
61P002	3-500kcMIL, #3G	SWBD 5101	MCC N
61C003	8#12	PUMP CONTROL	MCC N
61P004	3#12, #12G	61PMP024	MCC N
61P005	3#12, #12G	61PMP025	MCC N
61P006	3#12, #12G, 4#12	61PMP030	MCC N
61P007	3#12, #12G, 10#12	61GT022	MCC N
61P008	3#10, #10G	GT LIGHTS & OUTLETS	LP N
61P009	3#8, #10G	610S007	MCC N
61C010	6#16	610S007	RTU-4
61P011	4#10, 2#10G	SITE LIGHTS	MCC N, LP-N
61C012	TSP	61LT029	RTU-4
71P001	3#10, #10G	71CI006	MCC B
71C002	TSP	SAMPLER, 71CS019	RTU-2
71P003	4#12, #12G	PUMPS	LP-BA
71C004	2#12, 6#16G	71CI006	RTU-2
71P005	2#12, #12G	SAMPLER, 71CS019	LP-BA
71P006	3#6, #8G	LPBA	LP-B
71C007	4#16	FLOW SWITCH	RTU-2
71C008	4#16	FLOW SWITCH	RTU-2

CONDUCTOR SCHEDULE (continue)

CONDUCTOR TAG	CONDUCTRS	FROM	TO
72P001	3#8, #10G, 2#12	72PMPI001	MCC B
72P002	3#8, #10G, 2#12	72PMP002	MCC B
72P003	3#10, #10G	120 VOLT	LP-B
72C004	3TSP, 8#16	CONTROL	RTU-2
75P001	2#12, #12G	HEAT TRACE OUTLETS	LP-D
75C002	4#16	75LSH107, 75LSH007	RTU-8
75C003	4TSP	TANK LEVELS	RTU-8
75C004	2#16	75FSH009	RTU-8
75P005	4#10, 2#10G	SITE LIGHT	MCC B, LP B
75P006	2#12, #10G	75T103 HEATER	LPB-13
75P007	2#12, #10G	75T104 HEATER	LPB-15
75P008	2#10, #10G	75LSH007, 75LSH107	LP D
75P009	6#12, 4#12G	TANK MOV POWER	LP D
75C010	28#16	TANK MOV CONTROL	RTU-8
76C001	8TSP, 16 #16	FERRIC CHLORIDE STORAGE	RTU-2
76P002	5#10, 2#10G	FERRIC CHLORIDE FEED	LP B
77P001	2#12, #12G	TANK HEATER	LPBA-11
77P002	5#10, #10G	SHO CHEMICAL AREA, 120V	LP B
77C003	7TSP, 12#16, 2#12	SHO CHEMICAL AREA	RTU-2
91P001	3-350kcMIL, 1#1/0G (2 SETS)	91PMP001	VFD
91P002	3-350kcMIL, 1#1/0G (2 SETS)	91PMP002	VFD
91P003	3-350kcMIL, 1#1/0G (2 SETS)	91PMP003	VFD
91C004	18#12	91PMP001, 002, 003	VFD
91C005	F.O. CABLE	RTU-8	SCADA CONTROL BLDG
91C006	20#12, DATA CABLES	STANDBY GENERATOR	SYNCHRONIZER PANEL
91P007	3-350kcMIL, #1/0N, #2/0G (3 SETS)	STANDBY GENERATOR	ATS
91P008	3#8, #10G	XFMR D	SWBD 1001
91P009	3#10, #10G	AIR COMPRESSOR	SWBD 1001
91C010	6#16	AIR COMPRESSOR	RTU-2

FILE: 215786-00E106.dwg
DATE: Oct 06, 2015-4:31:18pm, ranider

HDR Engineering, Inc.

ISSUE	DATE	DESCRIPTION
A	JUNE 2015	ISSUED FOR BID

PROJECT MANAGER	C. OLSON
DESIGNED	W.F. ETTLICH
DESIGNED	
CHECKED	L.D. SMITHEY
DRAWN	E.G. SESPENE
DATE	JUNE 30, 2015
PROJECT NUMBER	215786

REGISTERED PROFESSIONAL ENGINEER
WILLIAM F. ETTLICH
NO. 07625
EXP. 09/30/16
ELECTRICAL
STATE OF CALIFORNIA
06-30-15

CITY OF PINOLE CALIFORNIA 1903

PINOLE/HERCULES
WATER POLLUTION
CONTROL PLANT UPGRADE
CLIENT PN

ELECTRICAL

CONDUCTOR SCHEDULES

0 1" 2"

FILENAME	215786-00E106
SCALE	NONE

SHEET **00E106**

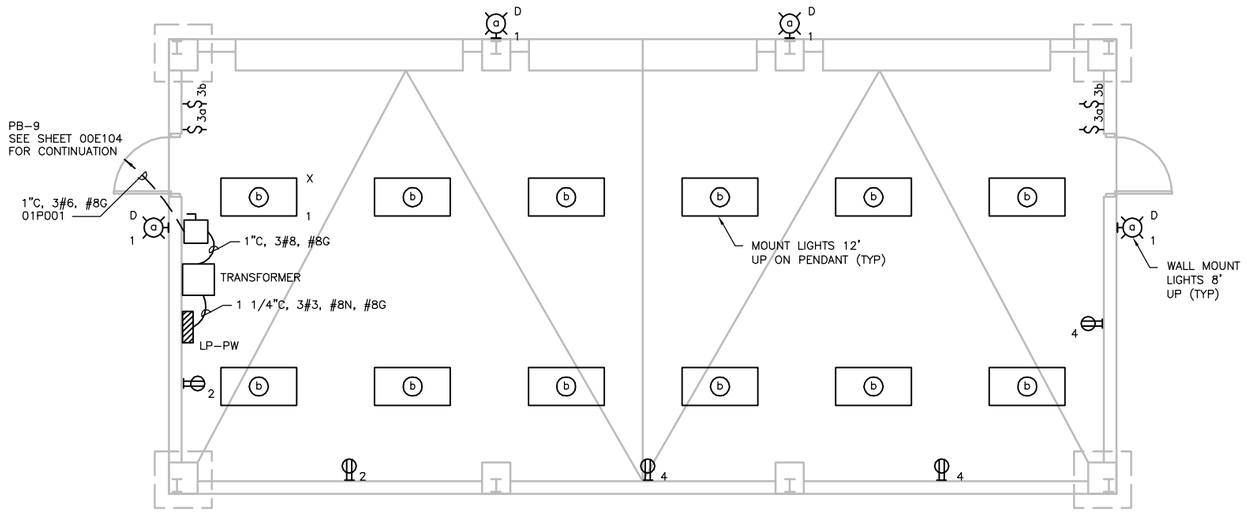

ELECTRICAL PLAN

FILE: 215786-01E101.dwg
DATE: Oct 06, 2015-4:31:24pm, rsnider

HDR Engineering, Inc.

ISSUE	DATE	DESCRIPTION
A	JUNE 2015	ISSUED FOR BID

PROJECT MANAGER	C. OLSON
DESIGNED	W.F. ETTLICH
DESIGNED	
CHECKED	L.D. SMITHEY
DRAWN	E.G. SESPENE
DATE	JUNE 30, 2015
PROJECT NUMBER	215786

REGISTERED PROFESSIONAL ENGINEER
WILLIAM F. ETTLICH
NO. 07625
EXP. 09/30/16
ELECTRICAL
STATE OF CALIFORNIA

CITY OF PINOLE CALIFORNIA 1903

PINOLE/HERCULES
WATER POLLUTION
CONTROL PLANT UPGRADE
CLIENT PN

ELECTRICAL

PUBLIC WORKS
ELECTRICAL PLAN

0 1" 2"

FILENAME	215786-01E101
SCALE	ELECTRICAL PLAN

SHEET
01E101

NEMA 4X RELAY ENCLOSURE RACK MOUNTED, LPB-30

NOTES:

1. THERE ARE 5 CONTROL DEVICES ON EACH SCREEN EACH REQUIRING 2#12 WIRES WIRED BACK TO THE LCP.
2. THERE ARE 6 CONTROL DEVICES ON THE SCREENING WASHER/COMPACTOR EACH REQUIRING 2#12 WIRES WIRED BACK TO THE LCP.
3. ALL STRUCTURES ARE CONSTRUCTED ON PILES AND DUCT BANKS MUST BE ROUTED BETWEEN PILES FOR CONNECTION TO STRUCTURE EQUIPMENT.

HEADWORKS UPPER LEVEL AREA IS CLASS 1 DIV 2 18" ABOVE CONCRETE DECK AND 18" ABOVE GRADE EXTENDING 10' OUT FROM EDGE OF DECK IN ALL DIRECTIONS. OUTDOOR AREA IS WET

ELECTRICAL PLAN

FILE: 215786-12E101.dwg
DATE: Oct 06, 2015-4:31:36pm, rsnider

HDR Engineering, Inc.

ISSUE	DATE	DESCRIPTION
A	JUNE 2015	ISSUED FOR BID

PROJECT MANAGER	C. OLSON
DESIGNED	W.F. ETTLICH
DESIGNED	
CHECKED	L.D. SMITHEY
DRAWN	E.G. SESPENE
DATE	JUNE 30, 2015
PROJECT NUMBER	215786

REGISTERED PROFESSIONAL ENGINEER WILLIAM F. ETTLICH NO. 07625 EXP. 09/30/16 ELECTRICAL STATE OF CALIFORNIA 06-30-15

CITY OF PINOLE CALIFORNIA 1903

PINOLE/HERCULES WATER POLLUTION CONTROL PLANT UPGRADE CLIENT PN

ELECTRICAL

HEADWORKS ELECTRICAL PLAN

0 1" 2"

FILENAME	215786-12E101
SCALE	3/8"=1'-0"

SHEET 12E101

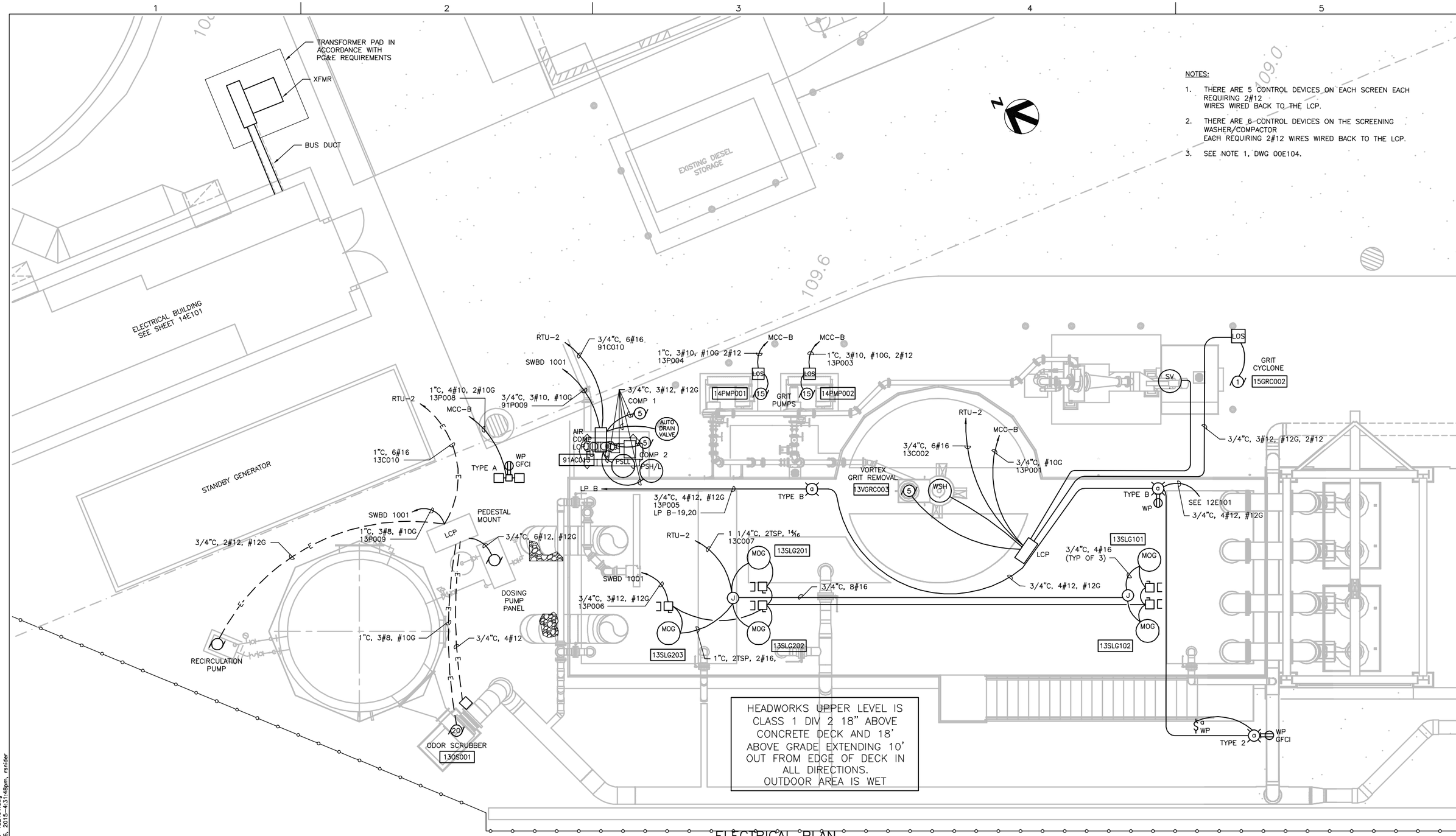

NOTES:

1. THERE ARE 5 CONTROL DEVICES ON EACH SCREEN EACH REQUIRING 2#12 WIRES WIRED BACK TO THE LCP.
2. THERE ARE 6 CONTROL DEVICES ON THE SCREENING WASHER/COMPACTOR EACH REQUIRING 2#12 WIRES WIRED BACK TO THE LCP.
3. SEE NOTE 1, DWG 00E104.

ELECTRICAL PLAN

FILE: 215786-13E101.dwg
DATE: Oct 06, 2015-4:31:48pm, rsnider

HDR
HDR Engineering, Inc.

ISSUE	DATE	DESCRIPTION
A	JUNE 2015	ISSUED FOR BID

PROJECT MANAGER	C. OLSON
DESIGNED	W.F. ETTLICH
DESIGNED	
CHECKED	L.D. SMITHEY
DRAWN	E.G. SESPENE
DATE	JUNE 30, 2015
PROJECT NUMBER	215786

REGISTERED PROFESSIONAL ENGINEER WILLIAM F. ETTLICH NO. 07625 EXP. 09/30/16 ELECTRICAL STATE OF CALIFORNIA 06-30-15

CITY OF PINOLE CALIFORNIA 1903

PINOLE/HERCULES WATER POLLUTION CONTROL PLANT UPGRADE CLIENT PN

ELECTRICAL

GRIT ELECTRICAL PLAN

0 1" 2"

FILENAME	215786-13E101
SCALE	1/8"=1'-0"

SHEET 13E101

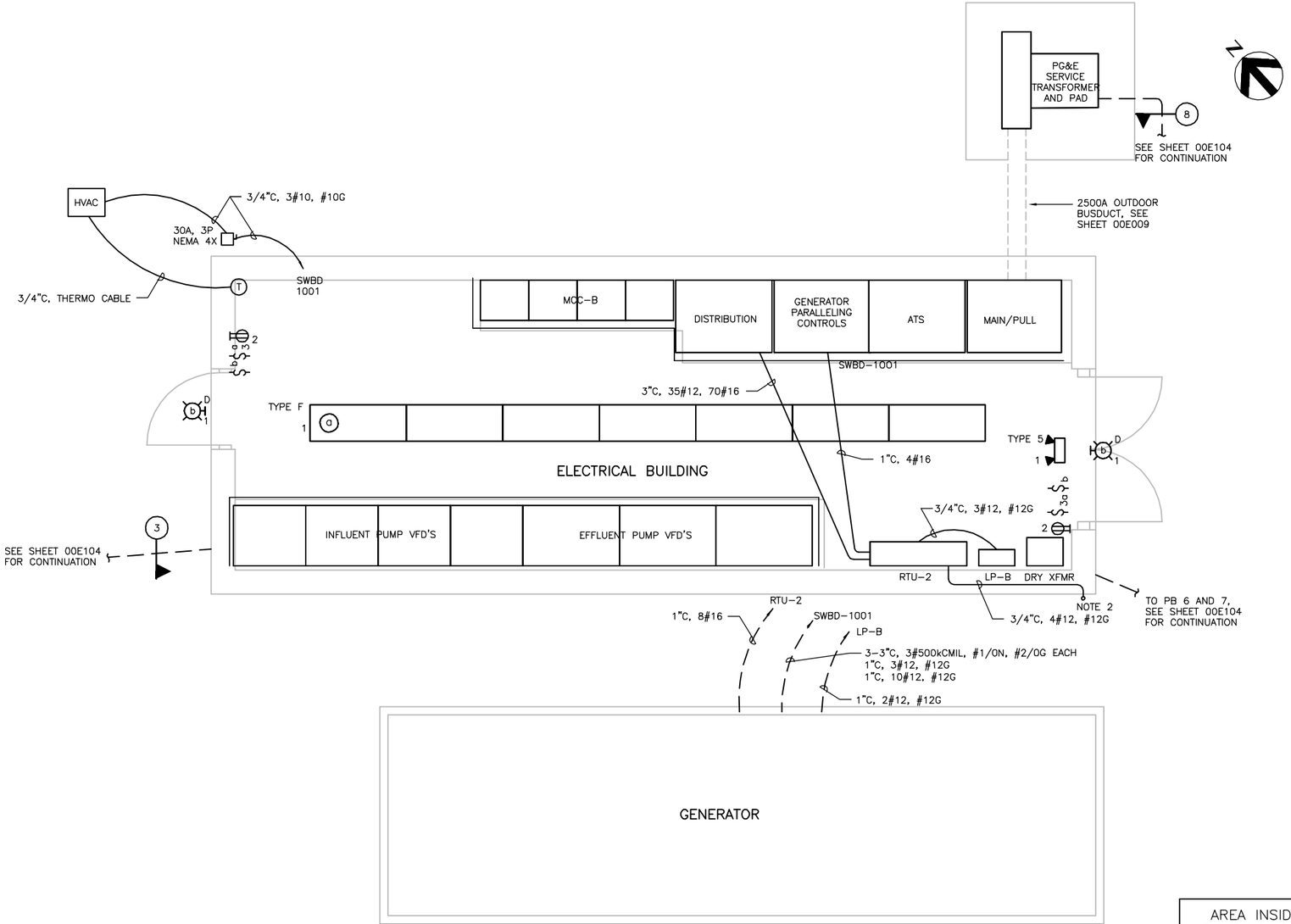

NOTES:

1. ALL STRUCTURES ARE CONSTRUCTED ON PILES AND DUCT BANKS MUST BE ROUTED BETWEEN PILES FOR CONNECTION TO STRUCTURE EQUIPMENT. DO NOT ENCASE DUCTS AND CONDUITS UNDER THE BUILDINGS.
2. MOUNT PHOTO ELECTRIC CELL FOR SITE LIGHTING ON 1" CONDUIT ON SIDE OF THE BUILDING.

AREA INSIDE ELECTRICAL BUILDING IS DRY. OUTSIDE AREAS ARE WET

ELECTRICAL PLAN

FILE: 215786-14E101.dwg
DATE: Oct 06, 2015-4:31:55pm, ranider

HDR Engineering, Inc.

ISSUE	DATE	DESCRIPTION
A	JUNE 2015	ISSUED FOR BID

PROJECT MANAGER	C. OLSON
DESIGNED	W.F. ETTLICH
DESIGNED	
CHECKED	L.D. SMITHEY
DRAWN	E.G. SESPENE
DATE	JUNE 30, 2015
PROJECT NUMBER	215786

REGISTERED PROFESSIONAL ENGINEER WILLIAM F. ETTLICH NO. 07625 EXP. 09/30/16 ELECTRICAL STATE OF CALIFORNIA 06-30-15

CITY OF PINOLE CALIFORNIA 1903

PINOLE/HERCULES
WATER POLLUTION
CONTROL PLANT UPGRADE
CLIENT PN

ELECTRICAL

ELECTRICAL BUILDING GENERATOR AREA ELECTRICAL PLAN

0 1" 2"

FILENAME	215786-14E101
SCALE	3/8"=1'-0"

SHEET **14E101**

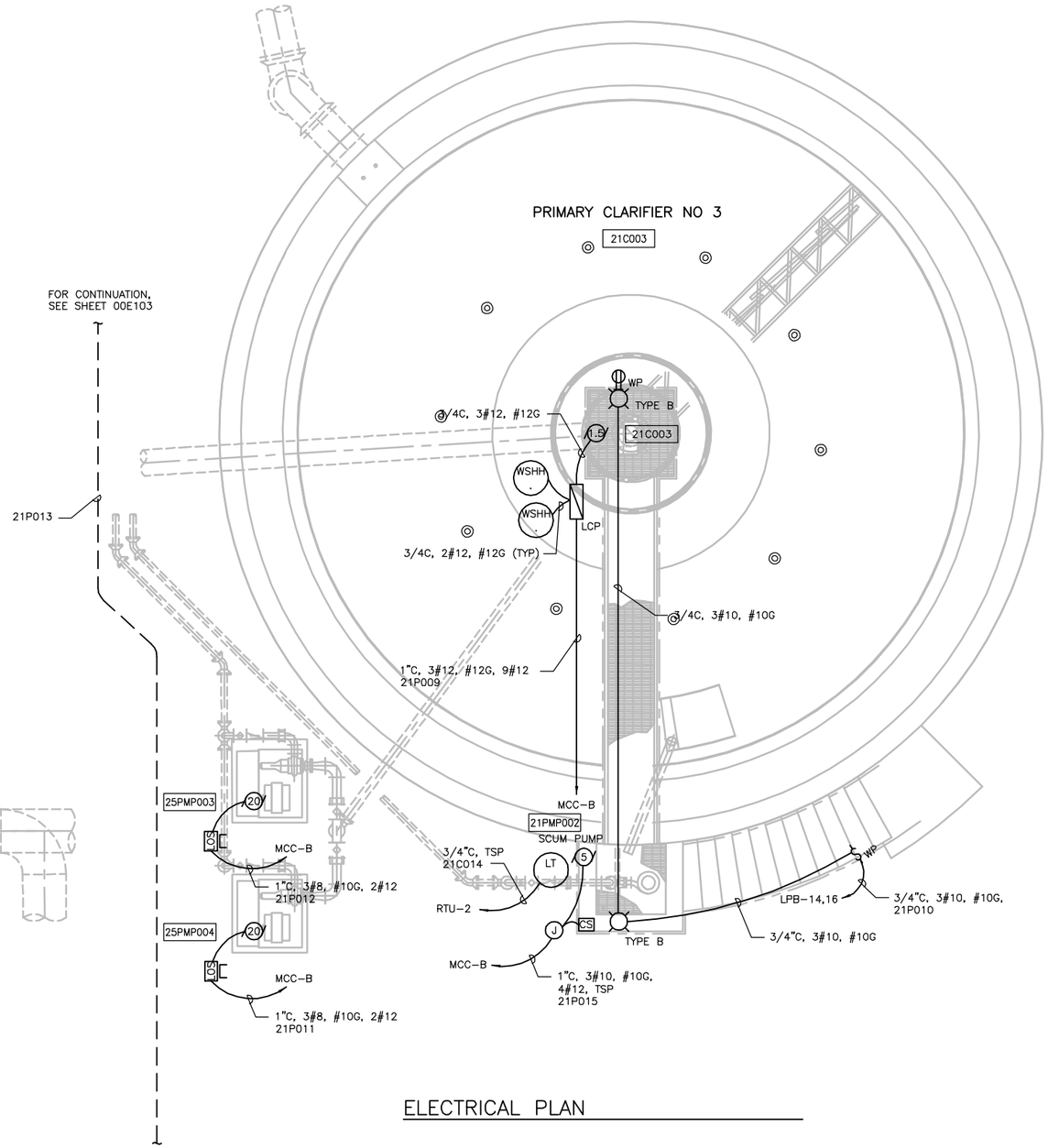

ELECTRICAL PLAN

ALL OUTDOOR AREAS CLASSIFIED WET. PRIMARY CLARIFIIERS CLASSIFIED CLASS 1 DIV 2 WITH IN CLARIFIER TO 18" ABOVE TOP OF CONCRETE WALL AND 18" ABOVE GRADE FOR 10' OUT FROM CLARIFIER WALLS

FILE: 215786-21E101.dwg
DATE: Oct 06, 2015-4:32:01pm, ramider

HDR Engineering, Inc.

ISSUE	DATE	DESCRIPTION
A	JUNE 2015	ISSUED FOR BID

PROJECT MANAGER	C. OLSON
DESIGNED	F.W. ETTLICH
DESIGNED	
CHECKED	L.D. SMITHEY
DRAWN	E.G. SESPENE
DATE	JUNE 30, 2015
PROJECT NUMBER	215786

REGISTERED PROFESSIONAL ENGINEER
WILLIAM F. ETTLICH
NO. 07625
EXP. 09/30/16
ELECTRICAL
STATE OF CALIFORNIA
06-30-15

CITY OF PINOLE CALIFORNIA 1903

PINOLE/HERCULES
WATER POLLUTION
CONTROL PLANT UPGRADE
CLIENT PN

ELECTRICAL

PRIMARY CLARIFIER NO. 3
ELECTRICAL PLAN

0 1" 2"

FILENAME	215786-21E101
SCALE	1/4"=1'-0"

SHEET **21E101**

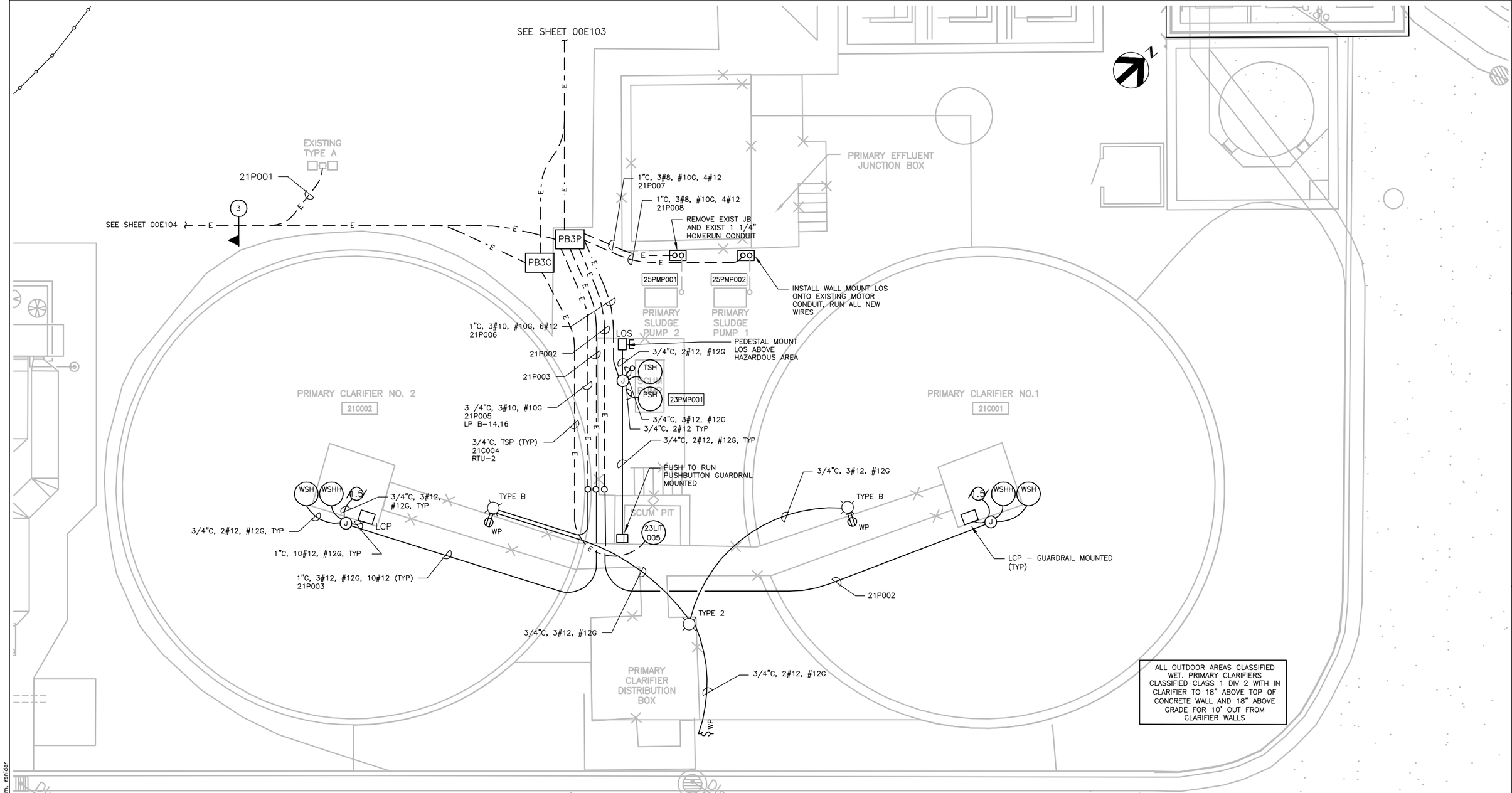

ELECTRICAL PLAN

FILE: 215786-21E102.dwg
DATE: Oct 06, 2015--4:32:12pm, ranider

HDR Engineering, Inc.

ISSUE	DATE	DESCRIPTION
A	JUNE 2015	ISSUED FOR BID

PROJECT MANAGER	C. OLSON
DESIGNED	F.W. ETTLICH
DESIGNED	
CHECKED	L.D. SMITHEY
DRAWN	E.G. SESPENE
DATE	JUNE 30, 2015
PROJECT NUMBER	215786

REGISTERED PROFESSIONAL ENGINEER
WILLIAM F. ETTLICH
NO. 07625
EXP. 09/30/16
ELECTRICAL
STATE OF CALIFORNIA

CITY OF PINOLE CALIFORNIA 1903

PINOLE/HERCULES
WATER POLLUTION
CONTROL PLANT UPGRADE
CLIENT PN

ELECTRICAL

PRIMARY CLARIFIERS NO 1 AND NO 2 ELECTRICAL PLAN

0 1" 2"

FILENAME	215786-21E102
SCALE	1"=5'-0"

SHEET **21E102**

NOTES:

1. SUPPORT IN GUARDRAIL EVERY 6' MAXIMUM USING STRUT, SEE DETAIL SHEET XXEXXX.
2. CONDUITS MAY BE RUN ON WALL BELOW DECK ON STRUT.
3. TYPICAL FOR ALL ANALYZERS, PROVIDE WATERPROOF DUPLEX OUTLET AND CORD AND PLUG ON ANALYZERS.
4. INTERCEPT EXISTING CONDUIT AND WIRE FOR EXISTING FIXTURE AND EXTEND AS SHOWN, 3/4"C, 4#10, #10G.
5. CONDUITS TO BE RUN ON OVERHEAD SUPPORTS. COMBINE WIRING TO PRODUCE FINAL CONDUIT/CONDUCTOR RUNS SHOWN.

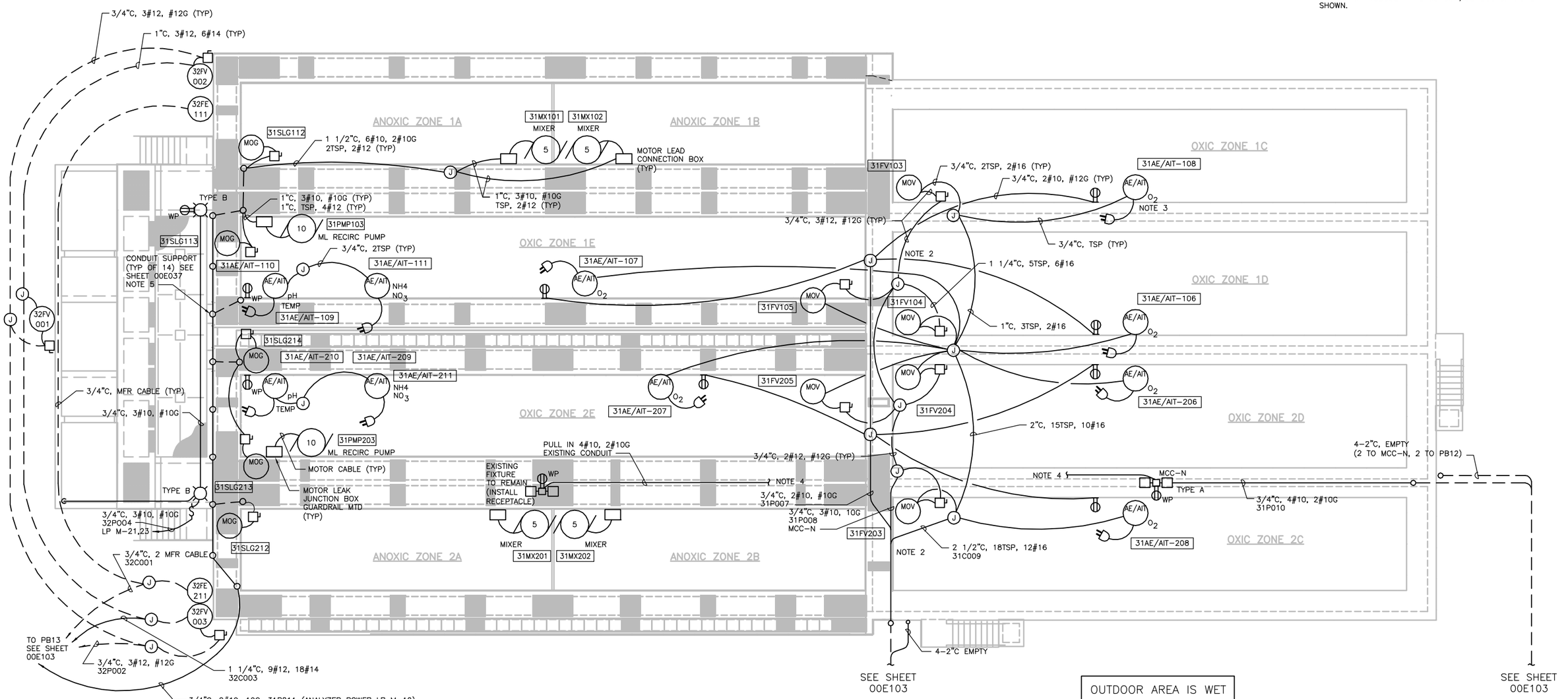

- 3/4"C, 2#10, 10G, 31P011 (ANALYZER POWER LP M-19)
- 3/4"C, 3#10, 10G, 31P012 (GATE ACTUATORS 31SLG112,113,212,213)
- 1 1/2"C, 6#10, 2#10G, 2TSP, 2#16, 31P013 (2-MIXERS)
- 1 1/2"C, 6#10, 2#10G, 2TSP, 2#16, 31P014 (2-MIXERS)
- 1"C, 6#10, 10G, 31P015 (2-RECIRC PUMPS)
- 1 1/4"C,2TSP, 8 #12, 31C018 (RECIRC PUMPS)
- 1 1/2"C, 8TSP, 31C016 (ANALYZERS)
- 2"C, 12#12, 18#16, 31C017 (GATE CONTROL-31SLG112,113,212,213)

ELECTRICAL PLAN

FILE: 215786-31E101.dwg
DATE: Oct 06, 2015-4:32:19pm, ranider

HDR Engineering, Inc.

ISSUE	DATE	DESCRIPTION
A	JUNE 2015	ISSUED FOR BID

PROJECT MANAGER	C. OLSON
DESIGNED	W.F. ETTLICH
DESIGNED	
CHECKED	L.D. SMITHEY
DRAWN	E.G. SESPENE
DATE	JUNE 30, 2015
PROJECT NUMBER	215786

REGISTERED PROFESSIONAL ENGINEER WILLIAM F. ETTLICH NO. 07625 EXP. 09/30/16 ELECTRICAL STATE OF CALIFORNIA 06-30-15

CITY OF PINOLE CALIFORNIA 1903

PINOLE/HERCULES
WATER POLLUTION
CONTROL PLANT UPGRADE
CLIENT PN

ELECTRICAL

AERATION BASIN DECK LEVEL ELECTRICAL PLAN

0 1" 2"

FILENAME	215786-31E101
SCALE	1/8"=1'-0"

SHEET 31E101

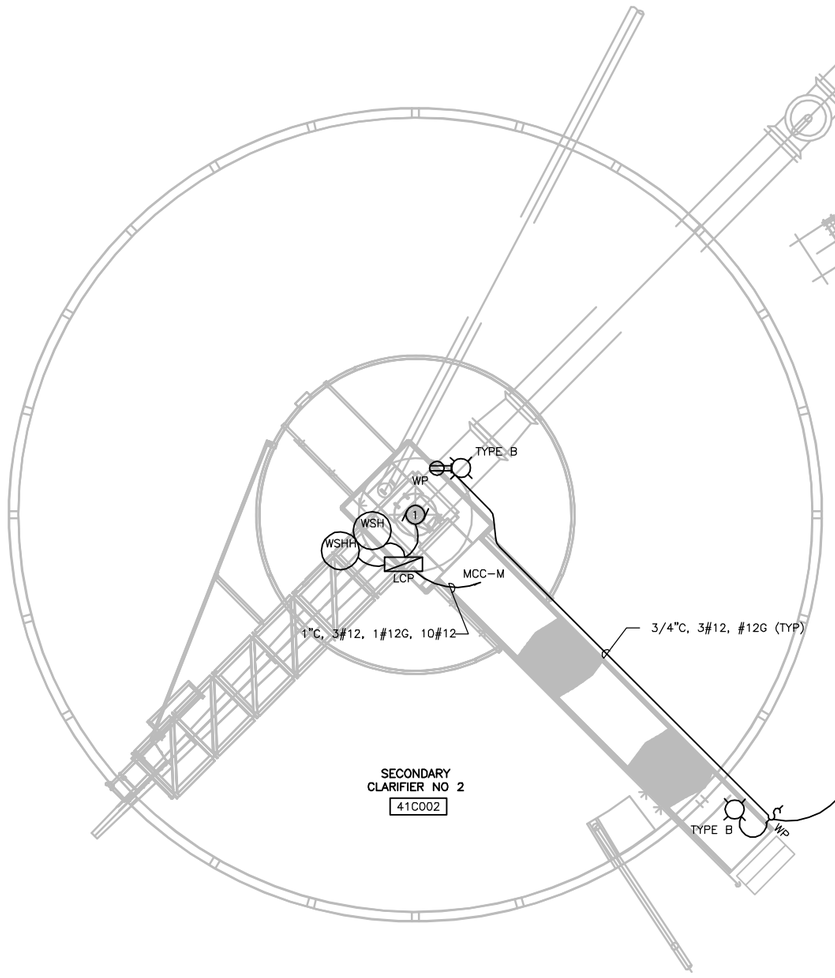

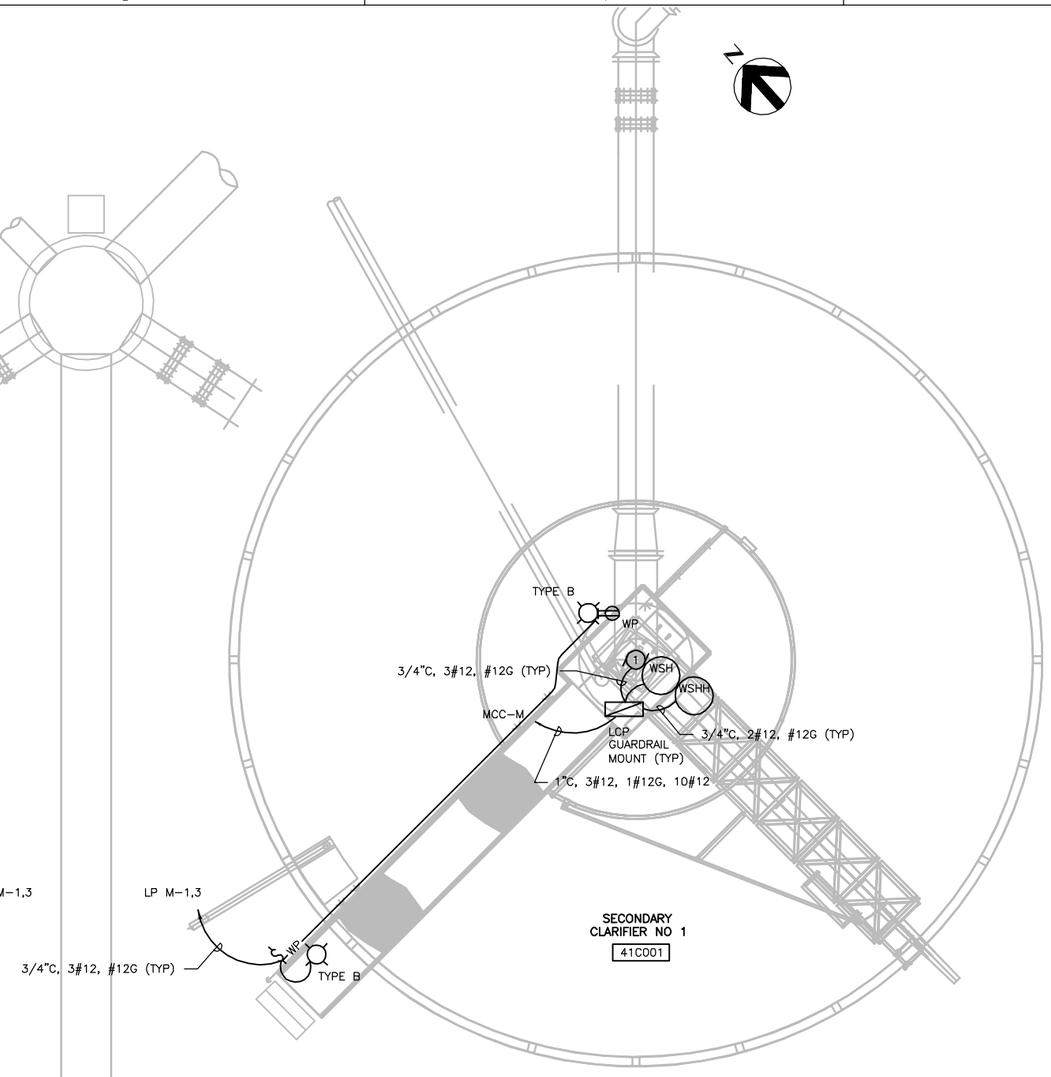

OUTDOOR AREA IS WET

ELECTRICAL PLAN

FILE: 215786–41E101.dwg
DATE: Oct 06, 2015–4:32:26pm, rsnider

HDR Engineering, Inc.

ISSUE	DATE	DESCRIPTION
A	JUNE 2015	ISSUED FOR BID

PROJECT MANAGER	C. OLSON
DESIGNED	F.W. ETTLICH
DESIGNED	
CHECKED	L.D. SMITHEY
DRAWN	E.G. SESPENE
DATE	JUNE 30, 2015
PROJECT NUMBER	215786

REGISTERED PROFESSIONAL ENGINEER
WILLIAM F. ETTLICH
NO. 07625
EXP. 09/30/16
ELECTRICAL
STATE OF CALIFORNIA
06-30-15

CITY OF PINOLE CALIFORNIA 1903

PINOLE/HERCULES
WATER POLLUTION
CONTROL PLANT UPGRADE
CLIENT PN

ELECTRICAL

SECONDARY CLARIFIERS NO 1 AND NO 2
ELECTRICAL PLAN

0 1" 2"

FILENAME	215786–41E101
SCALE	3/16"=1'–0"

SHEET
41E101

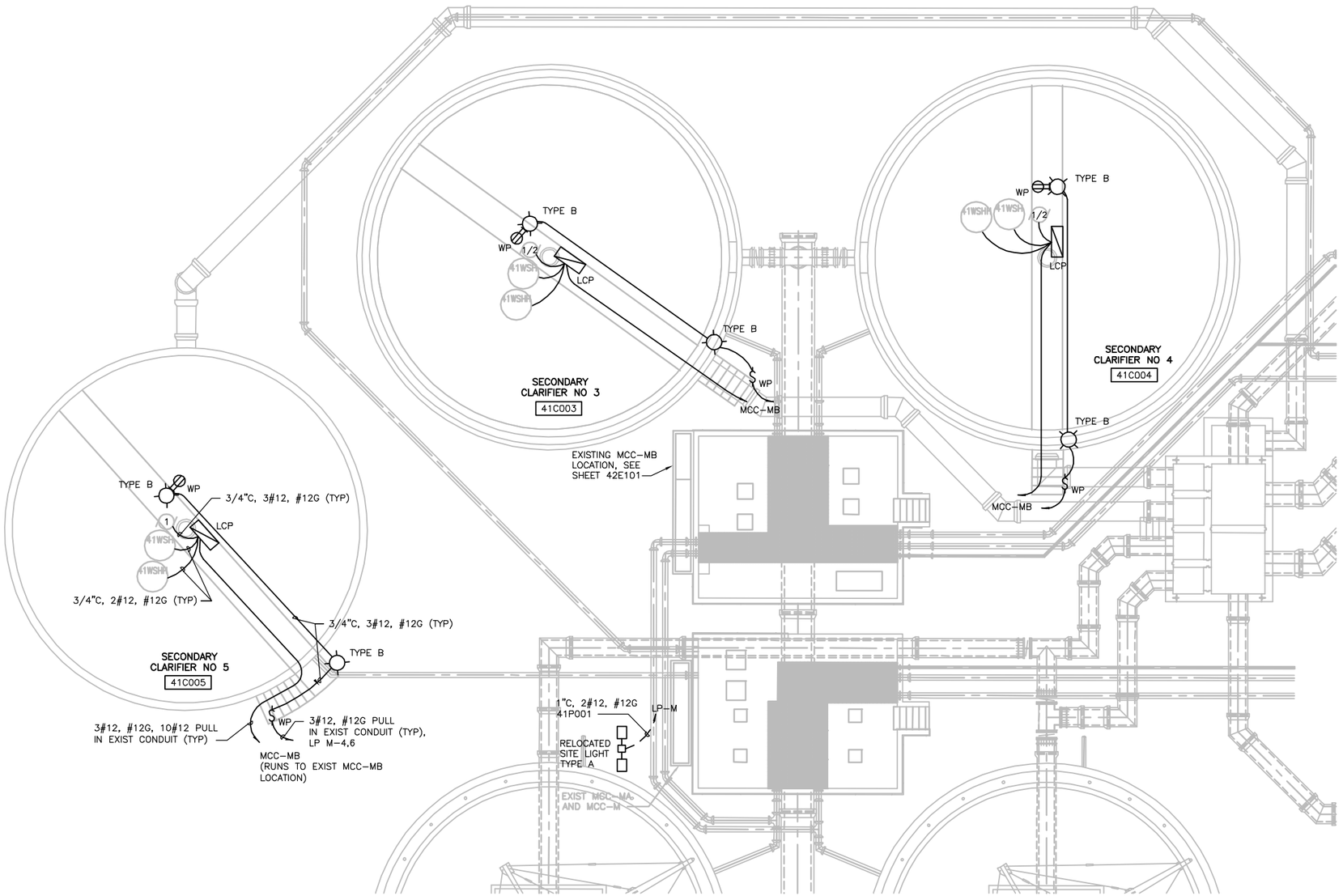

OUTDOOR AREA IS WET

ELECTRICAL PLAN

FILE: 215786-41E102.dwg
DATE: Oct 06, 2015-4:32:33pm, rsnider

HDR Engineering, Inc.

ISSUE	DATE	DESCRIPTION
A	JUNE 2015	ISSUED FOR BID

PROJECT MANAGER	C. OLSON
DESIGNED	F.W. ETTLICH
DESIGNED	
CHECKED	L.D. SMITHEY
DRAWN	E.G. SESPENE
DATE	JUNE 30, 2015
PROJECT NUMBER	215786

REGISTERED PROFESSIONAL ENGINEER
WILLIAM F. ETTLICH
NO. 07625
EXP. 09/30/16
ELECTRICAL
STATE OF CALIFORNIA
06-30-15

CITY OF PINOLE CALIFORNIA 1903

PINOLE/HERCULES
WATER POLLUTION
CONTROL PLANT UPGRADE
CLIENT PN

ELECTRICAL

EXISTING SECONDARY CLARIFIERS NO. 3, 4 & 5 ELECTRICAL PLAN

0 1" 2"

FILENAME	215786-41E102
SCALE	1/8"=1'-0"

SHEET **41E102**

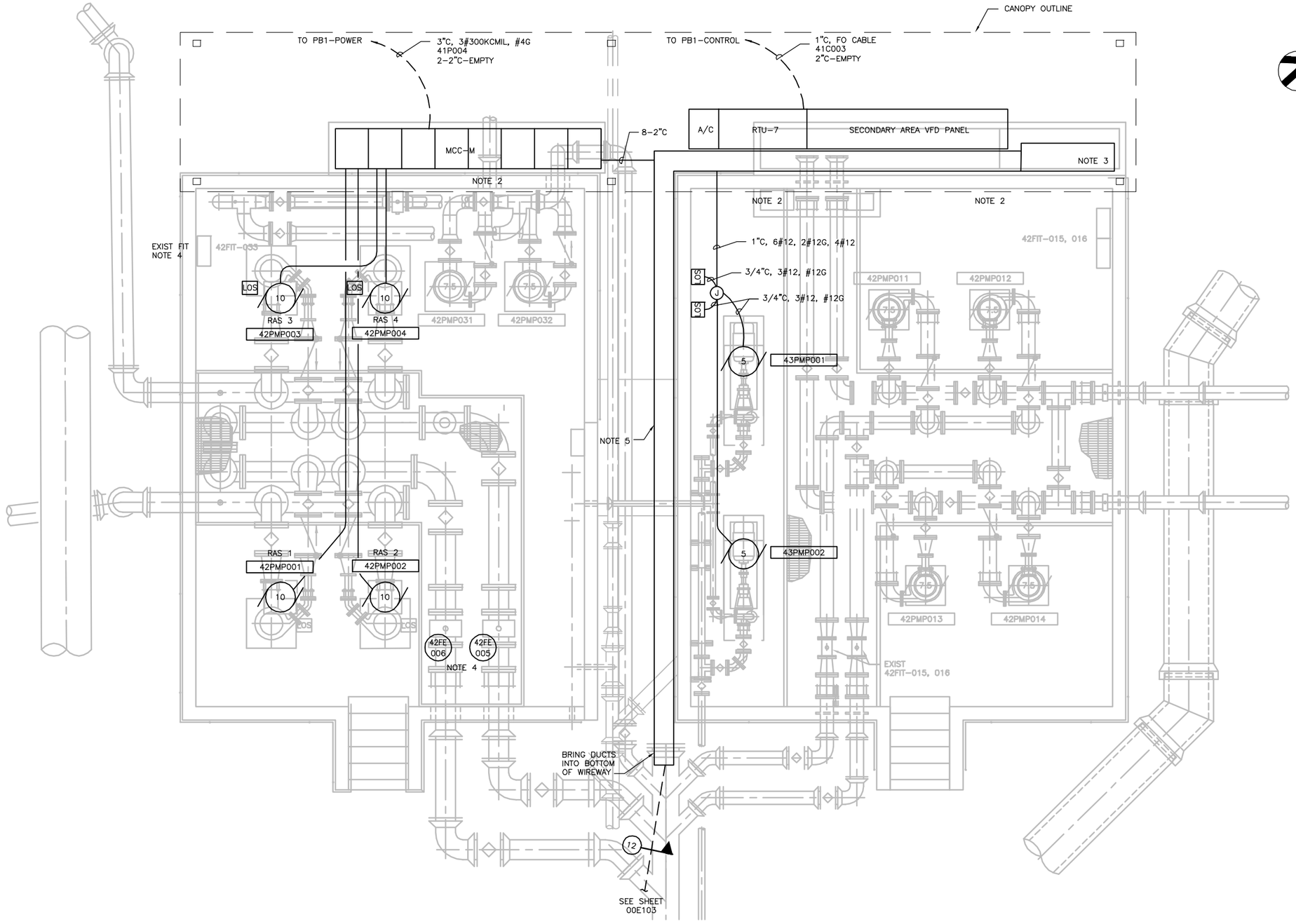

NOTES:

1. REMOVE RAS 4 PUMP LOS PEDESTAL. MOUNT RAS 4 PUMP LOS ON RAS 3 PUMP 3 LOS PEDESTAL AND WIRE BACK TO JUNCTION BOX AS SHOWN.
2. DISCONNECT AND RECONNECT ALL EXISTING CONDUITS AND WIRES TO REPLACEMENT VFD PANEL, RTU-7 AND MCC-M. TAG WIRES BEFORE REMOVAL OF WIRING FROM EXISTING PANELS.
3. EXISTING MCC-MB LOCATION. MOUNT WIREWAY OVER EXISTING MCC-MB CONDUITS STUBBED UP FROM CONCRETE, SEE SHEET 00E033.
4. REPLACE EXISTING FLOW METERS, EXTEND AND CONNECT EXISTING CONDUITS, PULL NEW MFR CABLES FROM FE'S TO FIT'S AND INSTALL AND CONNECT NEW FIT'S IN EXISTING ENCLOSURE.
5. INSTALL 12"x12" NEMA 4X WIREWAY WITH GASKETED REMOVABLE TOP COVER AND DIVIDING WALL ALONG MIDDLE OF WIREWAY TO FORM POWER AND INSTRUMENT WIREWAYS.

ELECTRICAL PLAN

HDR Engineering, Inc.

ISSUE	DATE	DESCRIPTION
A	JUNE-2015	ISSUED FOR BID

PROJECT MANAGER	C. OLSON
DESIGNED	F.W. ETTLICH
DESIGNED	
CHECKED	L.D. SMITHEY
DRAWN	E.G. SESPENE
DATE	JUNE 30, 2015
PROJECT NUMBER	215786

PINOLE/HERCULES
WATER POLLUTION
CONTROL PLANT UPGRADE
CLIENT PN

ELECTRICAL

EXISTING RAS/WAS PUMPING STATIONS ELECTRICAL PLAN

0 1" 2"

FILENAME	215786-41E103
SCALE	3/8"=1'-0"

SHEET **41E103**

FILE: 215786-41E103.dwg
DATE: Oct 06, 2015-4:32:39pm, rsnider

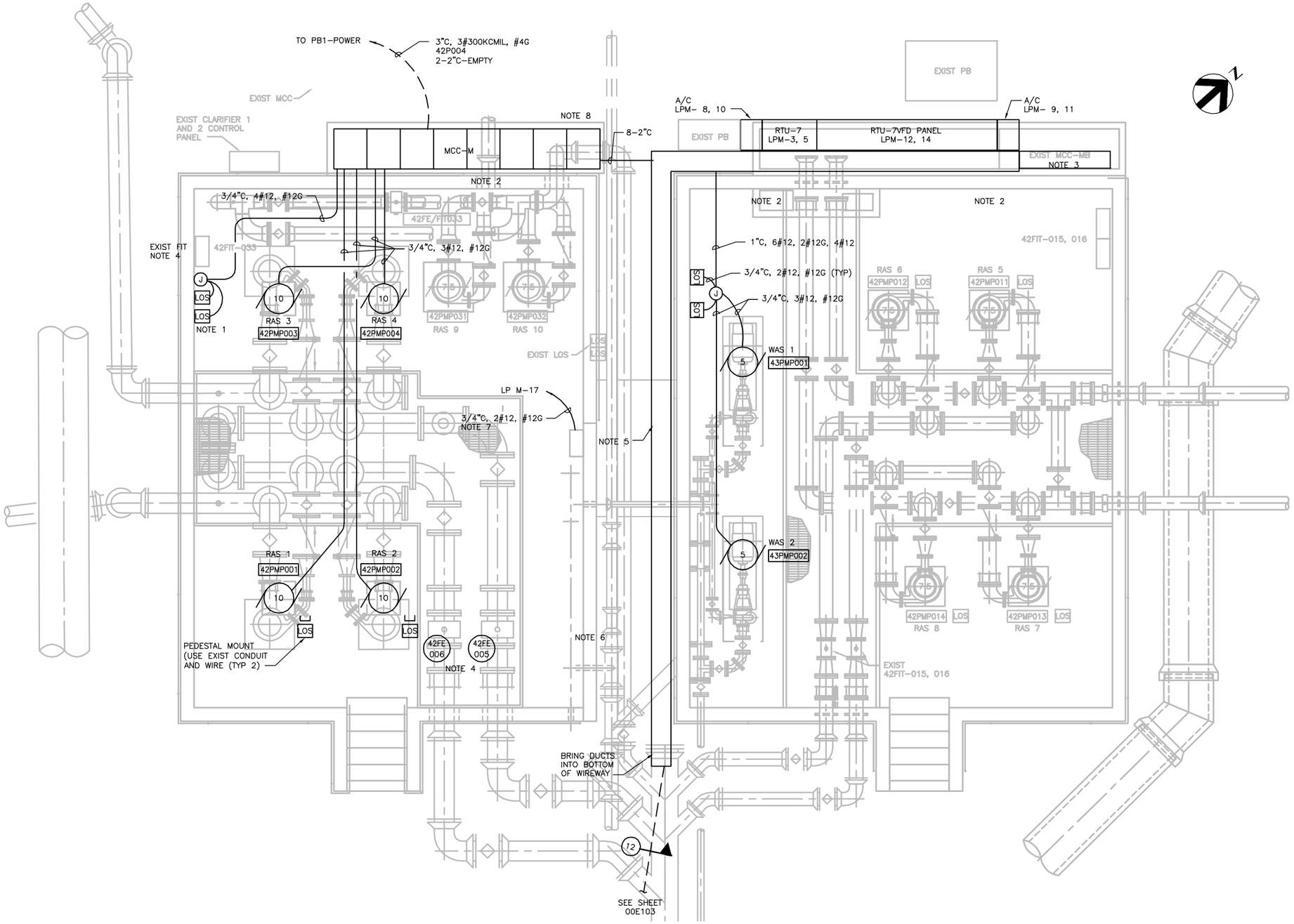

NOTES:

1. REMOVE RAS 3 AND 4 PUMP LOS PEDESTALS. WALL MOUNT RAS SWITCHES AND WIRE BACK TO MCC AS SHOWN.
2. DISCONNECT AND RECONNECT ALL EXISTING CONDUITS AND WIRES TO REPLACEMENT VFD PANEL, RTU–7 AND MCC–M AS REQUIRED. TAG WIRES BEFORE REMOVAL OF WIRING FROM EXISTING PANELS.
3. EXISTING MCC–MB LOCATION. MOUNT WIREWAY OVER EXISTING MCC–MB CONDUITS STUBBED UP FROM CONCRETE, SEE SHEET 00E033.
4. REPLACE EXISTING FLOW METERS AND TRANSMITTERS, EXTEND AND CONNECT EXISTING CONDUITS, PULL MFR CABLES FROM FE'S TO FIT'S AND INSTALL AND CONNECT FIT'S IN EXISTING ENCLOSURE.
5. INSTALL 12"x12" NEMA 4X WIREWAY WITH GASKETED REMOVABLE TOP COVER AND DIVIDING WALL ALONG MIDDLE OF WIREWAY TO FORM POWER AND INSTRUMENT WIREWAYS.
6. CONNECT EXISTING WAS CONTROL VALVES, 43FCV009, 010 I/O TO RTU–7 AND POWER TO LPM–20.
7. CONNECT POWER TO EXISTING WAS FLOW TRANSMITTERS, 43FIT007, 008 AS SHOWN.
8. MCC–M TO BE INSTALLED IN 2 STEPS, SEE CONSTRUCTION SEQUENCE.
9. CONNECT EXIST 2–2" AND 1"C INTO RTU–7 AND RECONNECT WIRES TO RTU–7.

ELECTRICAL PLAN

ISSUE	DATE	DESCRIPTION
A	JUNE 2015	ISSUED FOR BID

PROJECT MANAGER	C. OLSON
DESIGNED	F.W. ETTLICH
DESIGNED	
CHECKED	L.D. SMITHEY
DRAWN	E.G. SESPENE
DATE	JUNE 30, 2015
PROJECT NUMBER	215786

REGISTERED PROFESSIONAL ENGINEER
WILLIAM F. ETTLICH
NO. 07625
EXP. 09/30/16
ELECTRICAL
STATE OF CALIFORNIA

HDR Engineering, Inc.

CITY OF PINOLE CALIFORNIA 1903

PINOLE/HERCULES
WATER POLLUTION
CONTROL PLANT UPGRADE
CLIENT PN

ELECTRICAL

EXISTING RAS PUMP STATION ELECTRICAL PLAN

0 1" 2"

FILENAME	215786–42E101
SCALE	3/8"=1'–0"

SHEET **42E101**

FILE: 215786–42E101.dwg
DATE: Oct 06, 2015–4:32:45pm rsnider

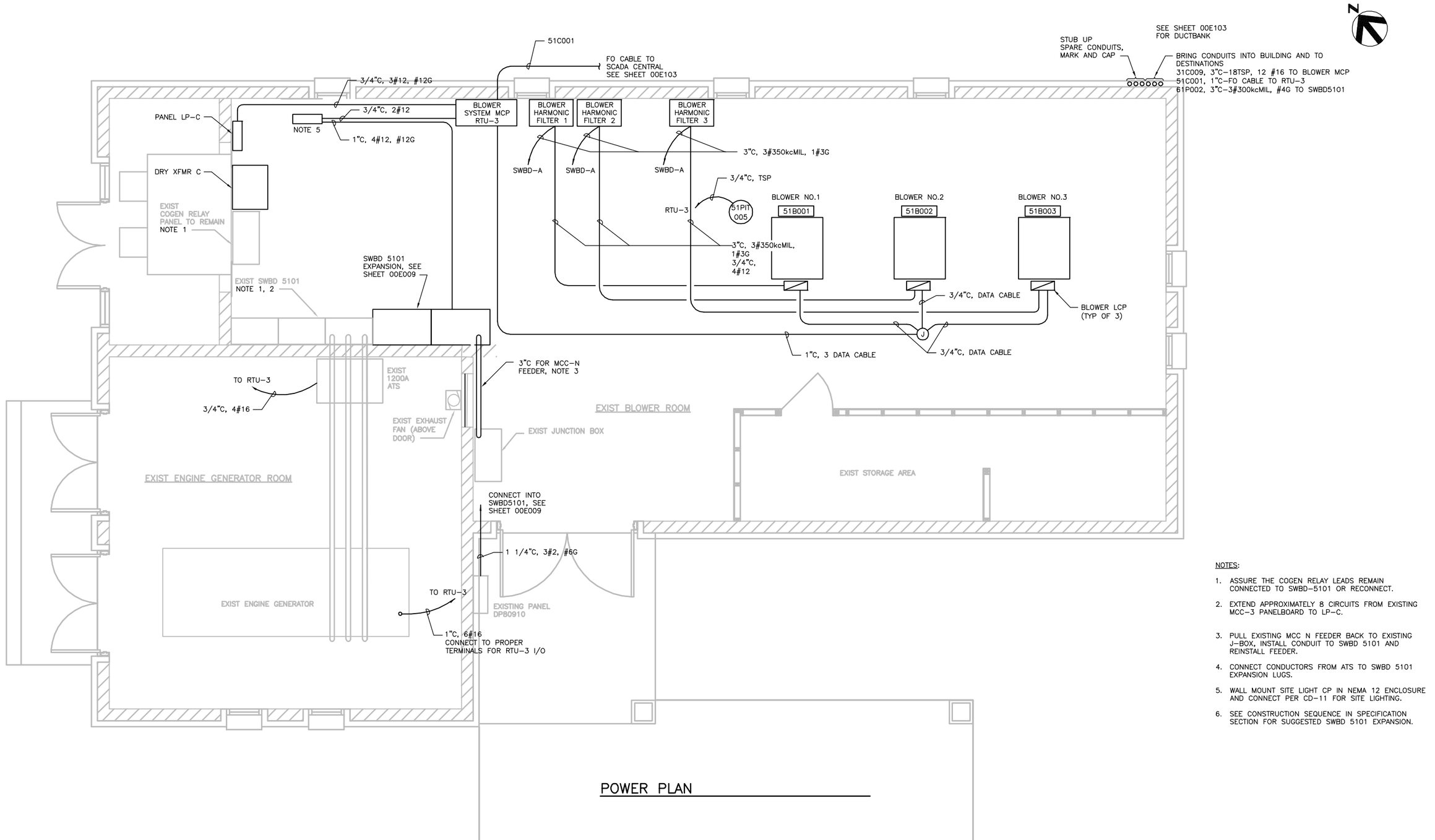

POWER PLAN

NOTES:

1. ASSURE THE COGEN RELAY LEADS REMAIN CONNECTED TO SWBD–5101 OR RECONNECT.
2. EXTEND APPROXIMATELY 8 CIRCUITS FROM EXISTING MCC–3 PANELBOARD TO LP–C.
3. PULL EXISTING MCC N FEEDER BACK TO EXISTING J–BOX, INSTALL CONDUIT TO SWBD 5101 AND REINSTALL FEEDER.
4. CONNECT CONDUCTORS FROM ATS TO SWBD 5101 EXPANSION LUGS.
5. WALL MOUNT SITE LIGHT CP IN NEMA 12 ENCLOSURE AND CONNECT PER CD–11 FOR SITE LIGHTING.
6. SEE CONSTRUCTION SEQUENCE IN SPECIFICATION SECTION FOR SUGGESTED SWBD 5101 EXPANSION.

FILE: 215786–51E101.dwg
DATE: Oct 06, 2015–4:32:51 pm, ranider

HDR Engineering, Inc.

ISSUE	DATE	DESCRIPTION
A	JUNE 2015	ISSUED FOR BID

PROJECT MANAGER	C. OLSON
DESIGNED	W.F. ETTLICH
DESIGNED	
CHECKED	L.D. SMITHEY
DRAWN	E.G. SESPENE
DATE	JUNE 30, 2015
PROJECT NUMBER	215786

REGISTERED PROFESSIONAL ENGINEER WILLIAM F. ETTLICH NO. 07625 EXP. 09/30/16 ELECTRICAL STATE OF CALIFORNIA 06-30-15

CITY OF PINOLE CALIFORNIA 1903

PINOLE/HERCULES
WATER POLLUTION
CONTROL PLANT UPGRADE
CLIENT PN

ELECTRICAL

EXISTING BLOWER BUILDING POWER PLAN

0 1" 2"

FILENAME	215786–51E101
SCALE	3/8"=1'–0"

SHEET **51E101**

POLYMER

65FSH 007
3/4"C, 2#16
RTU-4

LPN-9 65PBU001
LPN-11 65PBU002
LPN-16 65PBU003
LPN-18 65PBU004
3/4"C, 2#12, #12G (TYP 4)
RTU-4
1"C, TSP, 6#16 (TYP 4)

61FE 028
3/4"C, MFR CABLE

LCP 1
61PSH
LIT
61TSH
RTU-4
3/4"C, TSP (TYP)
3/4"C, 4#12 (TYP)

LCP 1
5
3/4"C, 3#12, #12G (TYP)
61PMP003
THICKENED SLUDGE FEED PUMP 1

RDT-1
61RDT001

3/4"C, 7#12 (TYP)
LCP 1
MOV
PSL
1
MIXER
61MX002
3/4"C, 2#12 (TYP)
3/4"C, 3#12, #12G
3/4"C, 3#12, #12G (TYP)
3
DRUM DRIVER
LCP 1
FLOCCULATION TANK
61T002
LCP 1
5
WATER BOOSTER (IF REQ'D)

THIS ROOM CLASSIFIED WET

RTU-4
3/4"C, 3#12, #12G
PB N-5,7
SEE SHEET 00E103 61C001 61C010 61C012 31C002 31C004 2-2"C EMPTY

LCP 2
THICKENED SLUDGE FEED PUMP 2
61PMP013
5
LCP 2
TSH
PSH
LIT
RTU-4

RDT-2
61RDT010

LCP 2
MOV
PSL
LCP 2
3/4"C, 3#12, #12G
DRUM DRIVER
3
1
MIXER
61MX012
LCP 2
FLOCCULATION TANK
61T012
3/4"C, 3#12, #12G (TYP)
5
WATER BOOSTER (IF REQ'D)

SEE SHEET 00E103
61P008 61P011 31P010 2-2"C EMPTY
3/4"C, CAT6 CABLE (TYP)
PANELBOARD N
XFMR-N

RTU-4
MCC-N
RTU-4
MCC-N
3/4"C, 3#10, #10G (TYP)
LCP 1
LCP 2
2

10
WP
2
10
WP
2
10
WP
2

LINE VOLTAGE COOLING THERMOSTAT
T
MCC-N
3/4"C, 2#12, #12G

THIS ROOM CLASSIFIED WET

N

ELECTRICAL PLAN

FILE: 215786-61E101.dwg
DATE: Oct 06, 2015-4:32:57pm, ranider

HDR Engineering, Inc.

ISSUE	DATE	DESCRIPTION
A	JUNE 2015	ISSUED FOR BID

PROJECT MANAGER	C. OLSON
DESIGNED	W.F. ETTLICH
DESIGNED	
CHECKED	L.D. SMITHEY
DRAWN	E.G. SESPENE
DATE	JUNE 30, 2015
PROJECT NUMBER	215786

REGISTERED PROFESSIONAL ENGINEER
WILLIAM F. ETTLICH
NO. 07625
EXP. 09/30/16
ELECTRICAL
STATE OF CALIFORNIA
06-30-15

CITY OF PINOLE CALIFORNIA 1903

PINOLE/HERCULES
WATER POLLUTION
CONTROL PLANT UPGRADE
CLIENT PN

ELECTRICAL

SOLIDS HANDLING BUILDING GROUND FLOOR ELECTRICAL PLAN

0 1" 2"

FILENAME	215786-61E101
SCALE	3/8"=1'-0"

SHEET
61E101

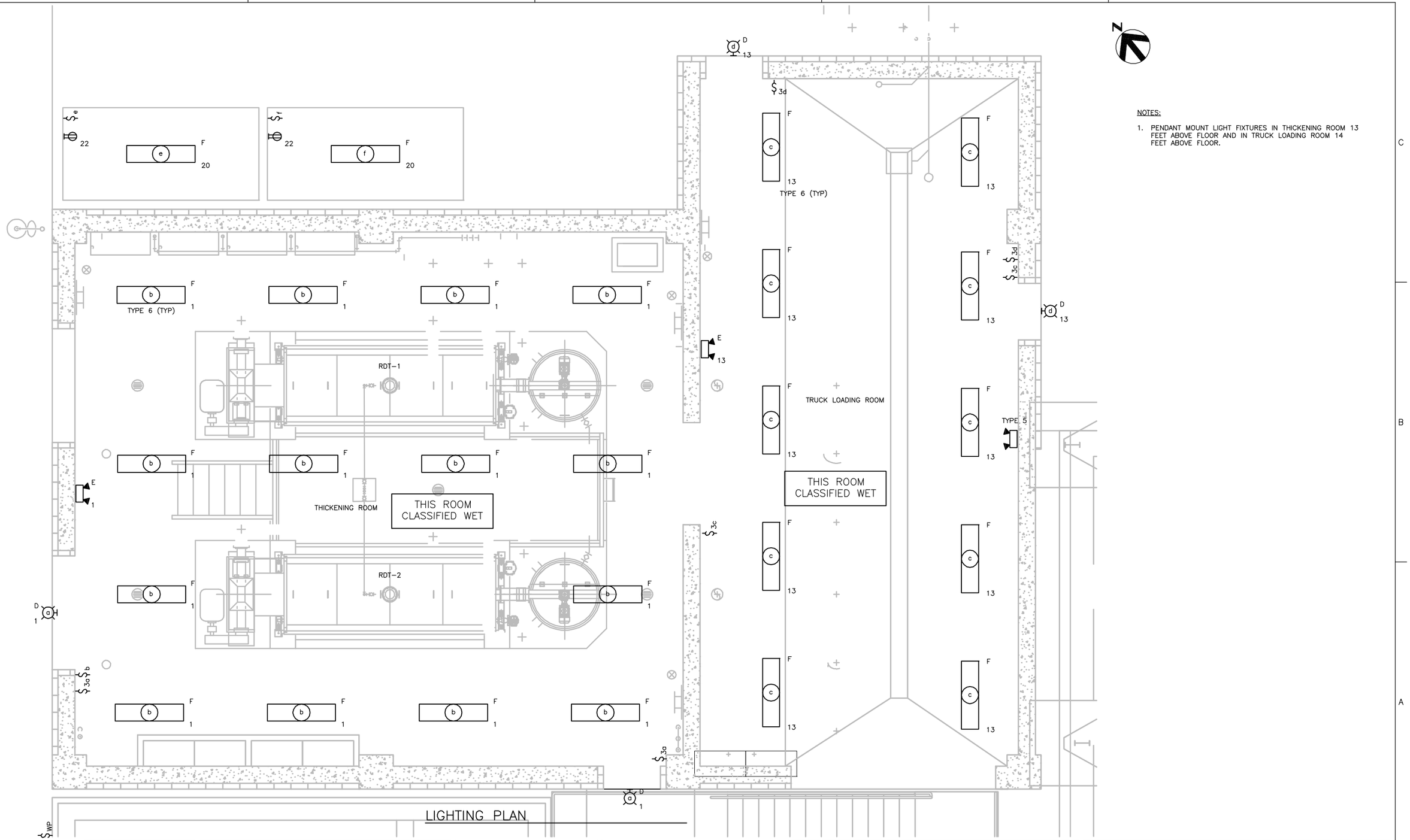

NOTES:

1. PENDANT MOUNT LIGHT FIXTURES IN THICKENING ROOM 13 FEET ABOVE FLOOR AND IN TRUCK LOADING ROOM 14 FEET ABOVE FLOOR.

FILE: 215786-61E102.dwg
DATE: Oct 06, 2015-4:35:05pm, rander

HDR Engineering, Inc.

ISSUE	DATE	DESCRIPTION
A	JUNE 2015	ISSUED FOR BID

PROJECT MANAGER	C. OLSON
DESIGNED	W.F. ETTLICH
DESIGNED	
CHECKED	L.D. SMITHEY
DRAWN	E.G. SESPENE
DATE	JUNE 30, 2015
PROJECT NUMBER	215786

REGISTERED PROFESSIONAL ENGINEER WILLIAM F. ETTLICH NO. 07625 EXP. 09/30/16 ELECTRICAL STATE OF CALIFORNIA

PINOLE/HERCULES WATER POLLUTION CONTROL PLANT UPGRADE CLIENT PN

ELECTRICAL

SOLIDS HANDLING BUILDING GROUND FLOOR LIGHTING PLAN

0 1" 2"

FILENAME	215786-61E102
SCALE	3/8"=1'-0"

SHEET **61E102**

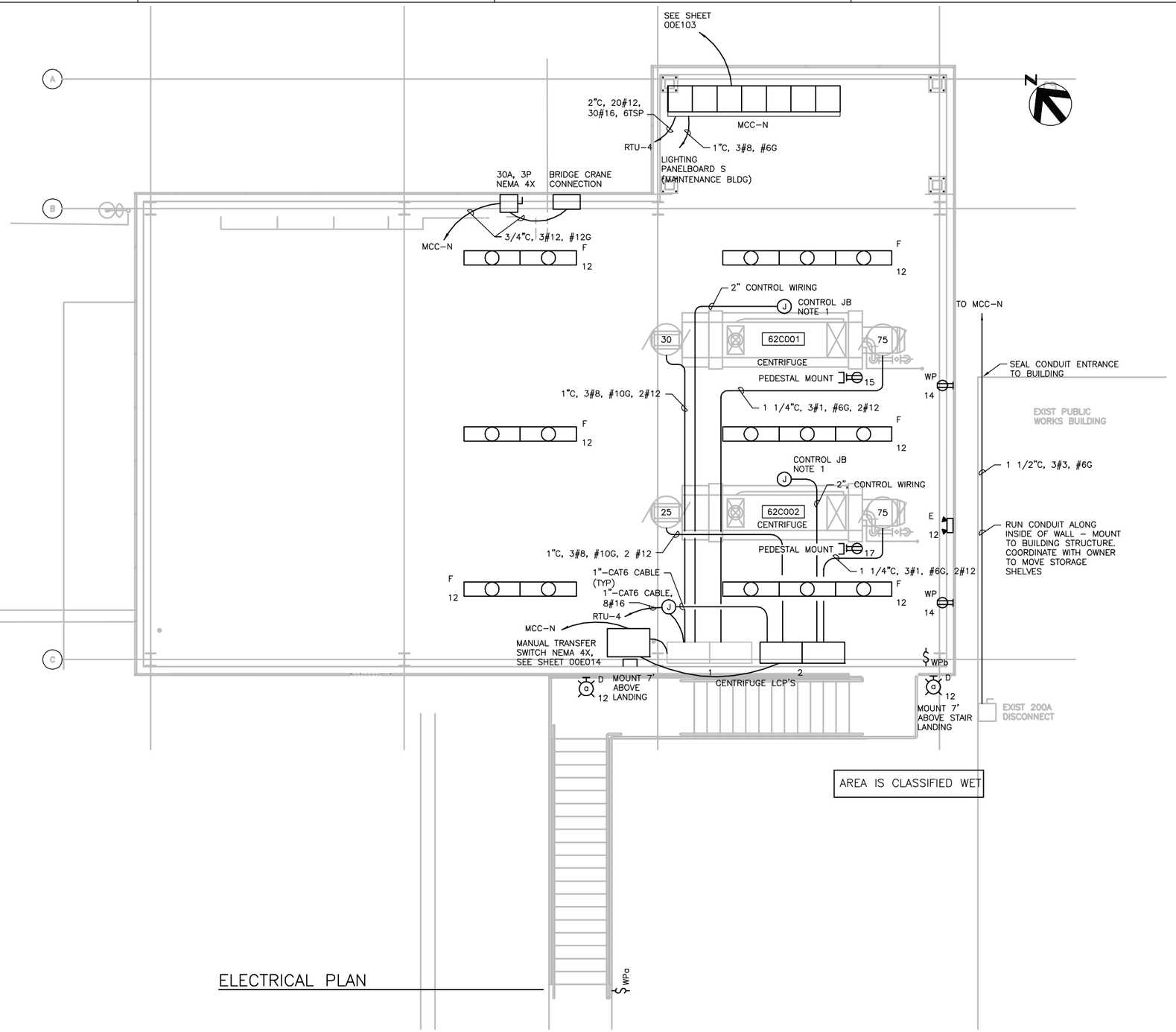

NOTES:

1. WIRE CENTRIFUGE CONTROLS TO JUNCTION BOX AND RUN CONTROL CONDUCTORS IN CONDUIT TO RESPECTIVE LCP.
2. MOUNT LIGHT FIXTURES IN DEWATERING AREA UNDER CEILING ABOVE BRIDGE CRANE.

ELECTRICAL PLAN

FILE: 215786-61E103.dwg
DATE: Oct 06, 2015-4:33:13pm, ranider

HDR Engineering, Inc.

ISSUE	DATE	DESCRIPTION
A	JUNE 2015	ISSUED FOR BID

PROJECT MANAGER	C. OLSON
DESIGNED	W.F. ETTLICH
DESIGNED	
CHECKED	L.D. SMITHEY
DRAWN	E.G. SESPENE
DATE	JUNE 30, 2015
PROJECT NUMBER	215786

REGISTERED PROFESSIONAL ENGINEER WILLIAM F. ETTLICH NO. 07625 EXP. 09/30/16 ELECTRICAL STATE OF CALIFORNIA 06-30-15

CITY OF PINOLE CALIFORNIA 1903

PINOLE/HERCULES
WATER POLLUTION
CONTROL PLANT UPGRADE
CLIENT PN

ELECTRICAL

SOLIDS HANDLING BUILDING SECOND FLOOR ELECTRICAL PLAN

0 1" 2"

FILENAME	215786-61E103
SCALE	1/4"=1'-0"

SHEET **61E103**

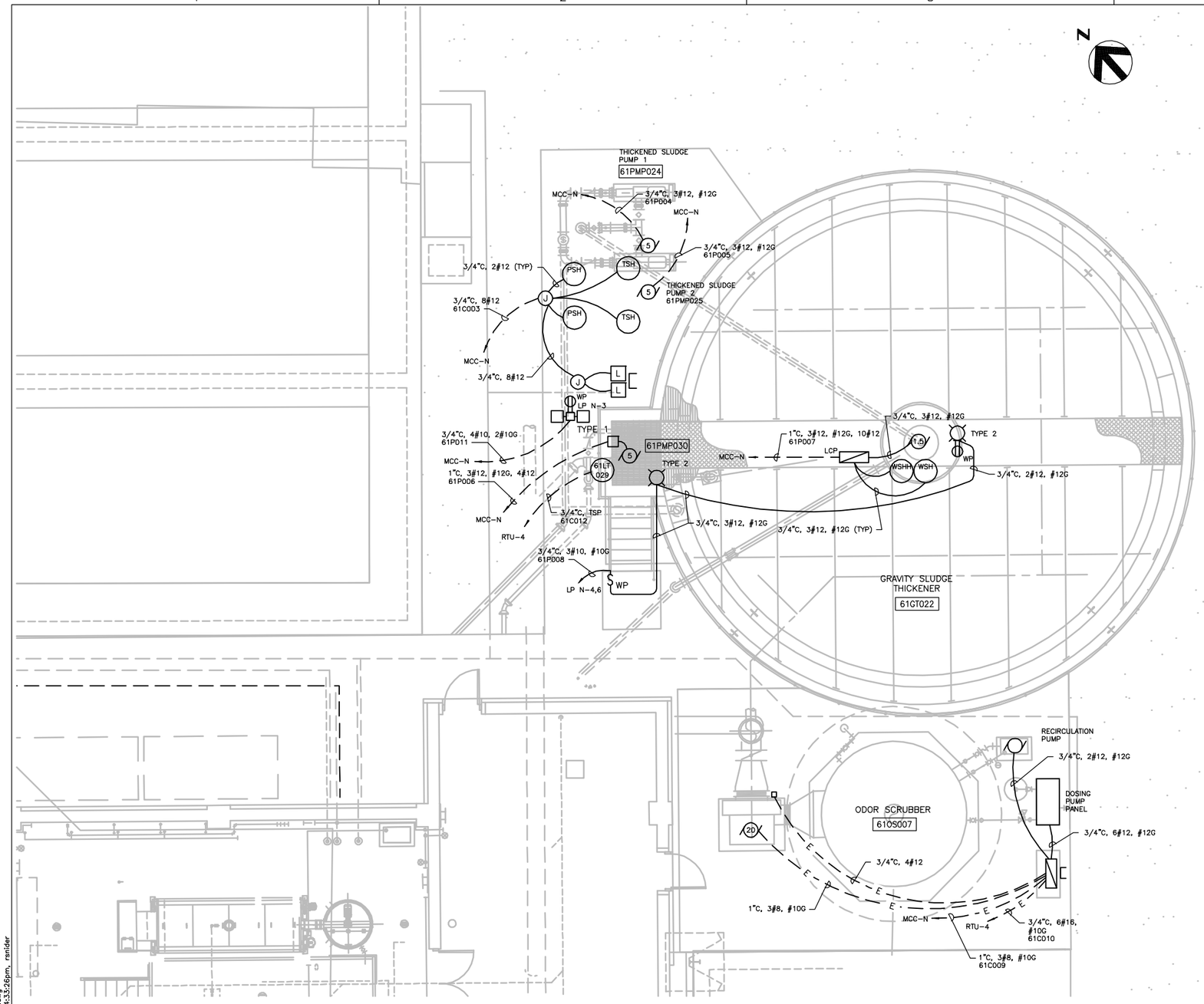

ELECTRICAL PLAN

FILE: 215786-61E104.dwg
DATE: Oct 06, 2015-4:33:26pm, rsnider

HDR Engineering, Inc.

ISSUE	DATE	DESCRIPTION
A	JUNE 2015	ISSUED FOR BID

PROJECT MANAGER	C. OLSON
DESIGNED	W.F. ETTLICH
DESIGNED	
CHECKED	L.D. SMITHEY
DRAWN	E.G. SESPENE
DATE	JUNE 30, 2015
PROJECT NUMBER	215786

REGISTERED PROFESSIONAL ENGINEER
WILLIAM F. ETTLICH
NO. 07625
EXP. 09/30/16
ELECTRICAL
STATE OF CALIFORNIA
06-30-15

CITY OF PINOLE CALIFORNIA 1903

PINOLE/HERCULES
WATER POLLUTION
CONTROL PLANT UPGRADE
CLIENT PN

ELECTRICAL

GRAVITY SLUDGE THICKENER ELECTRICAL PLAN

0 1" 2"

FILENAME	215786-61E104
SCALE	1"=5'-0"

SHEET
61E104

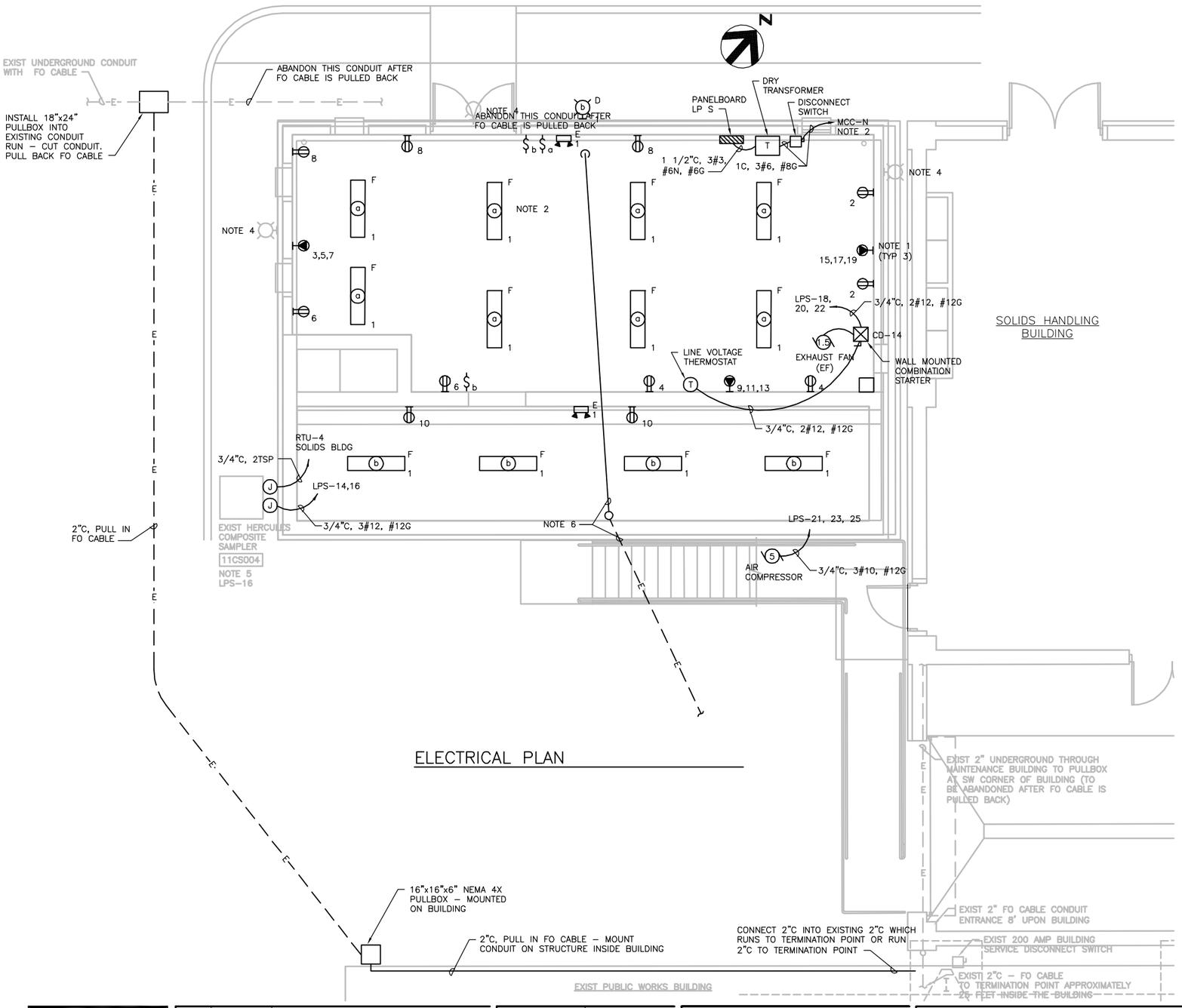

ELECTRICAL PLAN

NOTES:

1. 20A, 3ø OUTLETS FOR 120/208V, 3ø WITH GROUND.
2. CONTRACTOR MAY REUSE EXISTING LIGHTING BOXES, CONDUITS AND SWITCHES.
3. LINE VOLTAGE COOLING THERMOSTAT.
4. REMOVE 3 EXISTING LIGHT FIXTURES AND CONDUITS ON BUILDING.
5. HERCULES AND PINOLE SEWERS COMPOSITE SAMPLERS SIGNAL AND POWER WIRING ARE TO BE EXTENDED AS SHOWN. PINOLE SAMPLER IS SHOWN ON SHEET 00E104 BUT POWER AND SIGNAL WIRING IS BROUGHT TO THE HERCULES SAMPLER.
6. RUN TEMPORARY 1 1/2"C, 3#3, #8G FROM DISCONNECT IN EXIST MCC–N TO SERVICE DISCONNECT IN EXISTING PUBLIC WORKS BUILDING FOR TEMPORARY SERVICE UNTIL PERMANENT SERVICE FROM MCC–N IS INSTALLED AND THEN REMOVE. SEE SHEET 00E014.
7. REMOVE ALL UNUSED EXISTING CONDUITS AND WIRE.

FILE: 215786–66E101.dwg
DATE: Oct 06, 2015–4:33:33pm, rsnider

HDR Engineering, Inc.

ISSUE	DATE	DESCRIPTION
A	JUNE 2015	ISSUED FOR BID

PROJECT MANAGER	C. OLSON
DESIGNED	W. ETTLICH
DESIGNED	
CHECKED	L. SMITHEY
DRAWN	R. SNIDER
DATE	JUNE 30, 2015
PROJECT NUMBER	215786

REGISTERED PROFESSIONAL ENGINEER
WILLIAM F. ETTLICH
NO. 07625
EXP. 09/30/16
ELECTRICAL
STATE OF CALIFORNIA

CITY OF PINOLE CALIFORNIA 1903

PINOLE/HERCULES
WATER POLLUTION
CONTROL PLANT UPGRADE
CLIENT PN

ELECTRICAL

MAINTENANCE BUILDING ELECTRICAL PLAN

0 1" 2"

FILENAME	215786–66E101
SCALE	1/4"=1'–0"

SHEET **66E101**

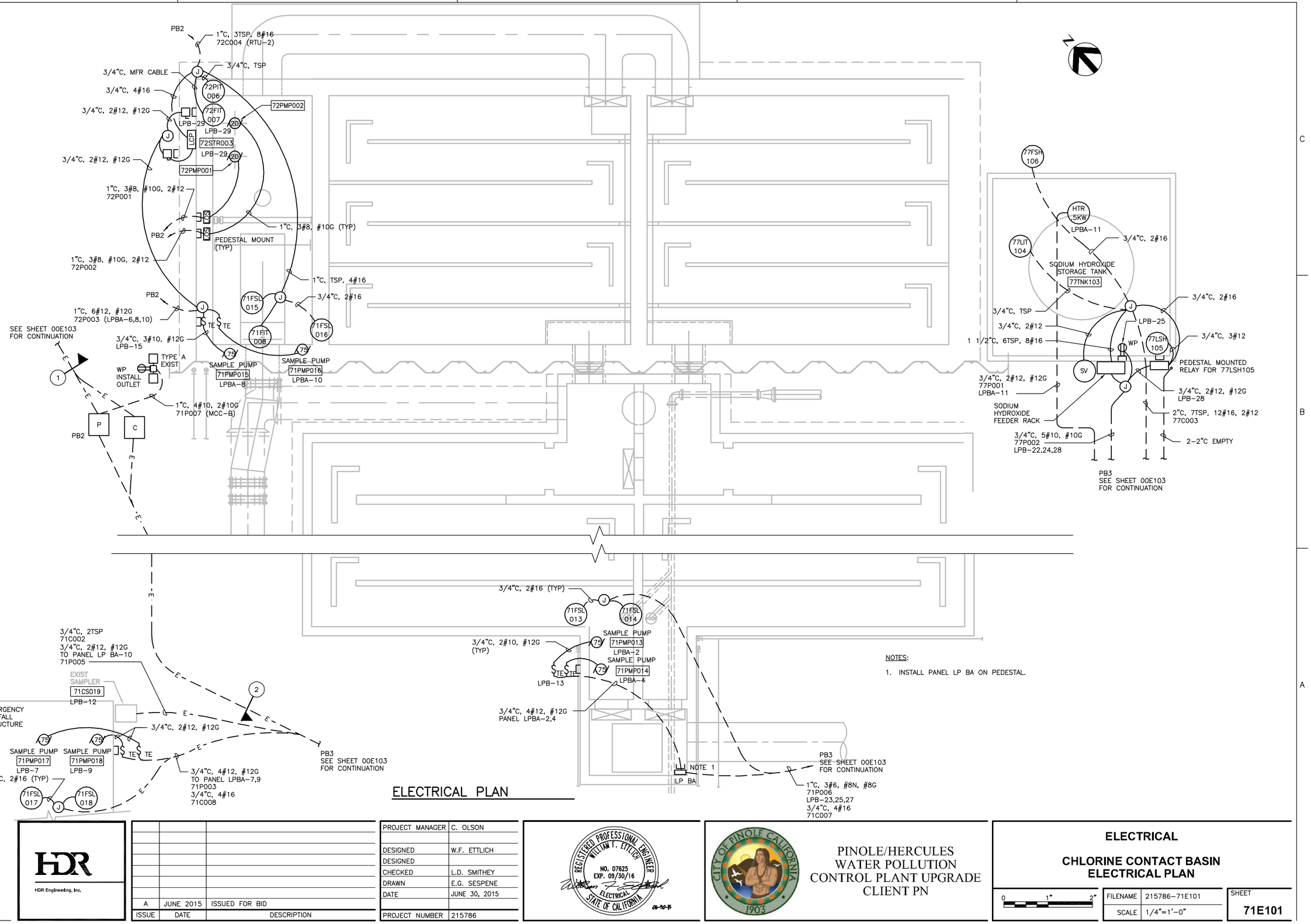

ELECTRICAL PLAN

FILE: 215786-71E101.dwg
DATE: Oct 06, 2015-4:33:39pm, rsnider

HDR Engineering, Inc.

ISSUE	DATE	DESCRIPTION
A	JUNE 2015	ISSUED FOR BID

PROJECT MANAGER	C. OLSON
DESIGNED	W.F. ETTLICH
DESIGNED	
CHECKED	L.D. SMITHEY
DRAWN	E.G. SESPENE
DATE	JUNE 30, 2015
PROJECT NUMBER	215786

REGISTERED PROFESSIONAL ENGINEER
WILLIAM F. ETTLICH
NO. 07625
EXP. 09/30/16
ELECTRICAL
STATE OF CALIFORNIA

CITY OF PINOLE CALIFORNIA 1903

PINOLE/HERCULES
WATER POLLUTION
CONTROL PLANT UPGRADE
CLIENT PN

ELECTRICAL

CHLORINE CONTACT BASIN ELECTRICAL PLAN

0 1" 2"

FILENAME	215786-71E101
SCALE	1/4"=1'-0"

SHEET **71E101**

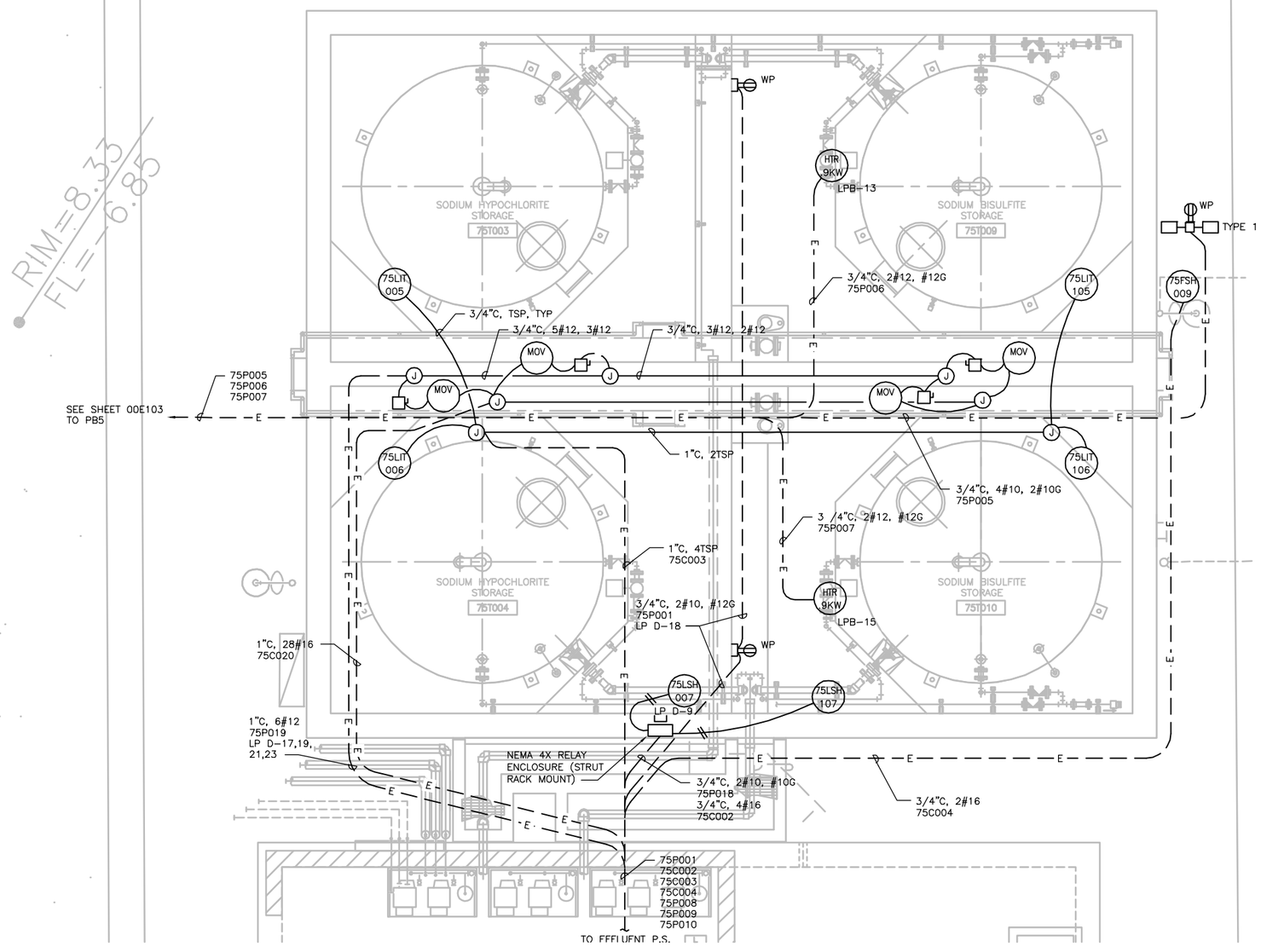

ELECTRICAL PLAN 1

FILE: 215786-75E101.dwg
DATE: Oct 06, 2015-4:33:45pm, rsnider

HDR Engineering, Inc.

ISSUE	DATE	DESCRIPTION
A	JUNE 2015	ISSUED FOR BID

PROJECT MANAGER	C. OLSON
DESIGNED	W.F. ETTLICH
DESIGNED	
CHECKED	L.D. SMITHEY
DRAWN	E.G. SESPENE
DATE	JUNE 30, 2015
PROJECT NUMBER	215786

REGISTERED PROFESSIONAL ENGINEER
THEODORE H. KONTOKOSTAS
NO. 29378
EXP. 06/30/17
MECHANICAL
STATE OF CALIFORNIA
06-30-15

CITY OF PINOLE CALIFORNIA 1903

PINOLE/HERCULES
WATER POLLUTION
CONTROL PLANT UPGRADE
CLIENT PN

ELECTRICAL

CHEMICAL STORAGE ELECTRICAL PLAN 1

0 1" 2"

FILENAME	215786-75E101
SCALE	3/8"=-1'-0"

SHEET **75E101**

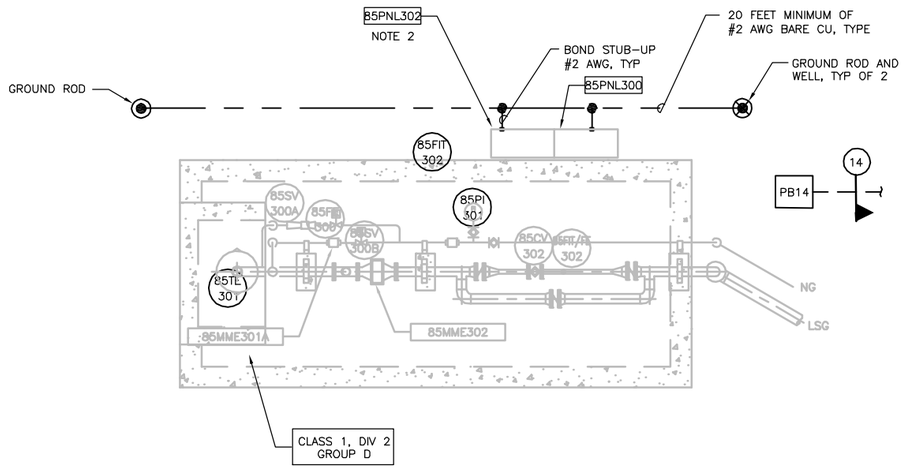

ELECTRICAL PLAN

NOTES:

1. NOT ALL CONDUITS ARE SHOWN. SEE SINGLE LINE DIAGRAMS FOR CABLE AND CONDUIT REQUIREMENTS.
2. PROVIDE EQUIPMENT RACK, FACE ALL PANELS NORTH.
3. LOCATION OF EXISTING DUCT BANK IS APPROXIMATE. CONTRACTOR SHALL USE CAUTION WHEN EXCAVATING. ROUTE NEW DUCT BANK UNDER EXISTING DUCT BANK.
4. GROUND ALL METAL AND EXPOSED PIPES.
5. PRIOR TO DISASSEMBLY OF THE DIGESTER GAS FLARE SYSTEM THE CONTRACTOR SHALL AS-BUILT THE EXISTING SYSTEM INCLUDING ALL INTERCONNECTING AND FEEDER CONDUITS, WIRES AND NOTE ALL WIRE CONNECTION POINTS INCLUDING TERMINAL NUMBERS SO SYSTEM CAN BE REASSEMBLED AND WIRED AS IT WAS PRIOR TO DISASSEMBLY.

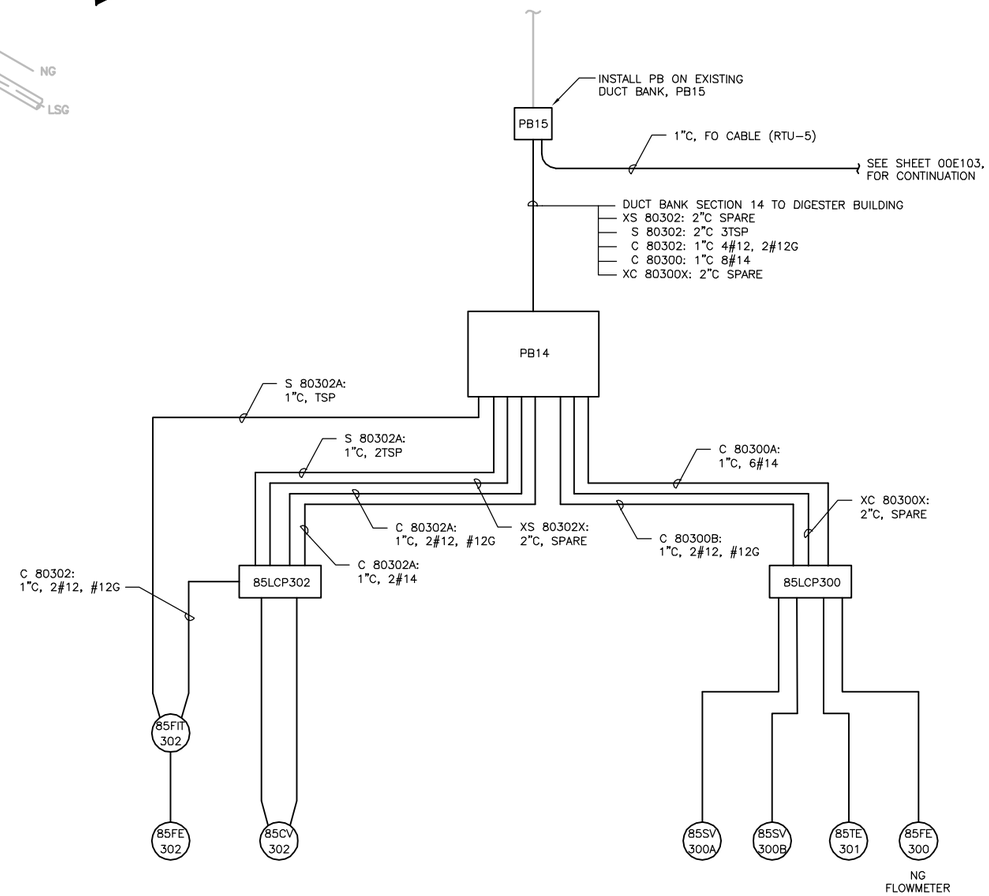

DIGESTER GAS FLARE ELECTRICAL WIRING BLOCK DIAGRAM

SCALE: NTS

(BASED ON BEST AVAILABLE DRAWINGS)
CONTRACTOR IS TO AS-BUILT THE ELECTRICAL CONDUIT, WIRING AND TERMINAL CONNECTIONS FOR THE EXISTING FLARE SYSTEM PRIOR TO DISMANTELING. CONDUIT NUMBERS BASED ON ORIGINAL B & C DRAWINGS.

FILE: 215786-85E101.dwg
DATE: Oct 06, 2015-4:33:51pm, rsnider

HDR Engineering, Inc.

ISSUE	DATE	DESCRIPTION
A	JUNE 2015	ISSUED FOR BID

PROJECT MANAGER	C. OLSON
DESIGNED	W.F. ETTLICH
DESIGNED	
CHECKED	L.D. SMITHEY
DRAWN	E.G. SESPENE
DATE	JUNE 30, 2015
PROJECT NUMBER	215786

REGISTERED PROFESSIONAL ENGINEER
THEODORE H. KONTOYIANNIS
NO. 29378
EXP. 06/30/17
MECHANICAL
STATE OF CALIFORNIA
06-30-15

CITY OF PINOLE CALIFORNIA 1903

PINOLE/HERCULES
WATER POLLUTION
CONTROL PLANT UPGRADE
CLIENT PN

ELECTRICAL

DIGESTER GAS BURNER ELECTRICAL PLAN

0 1" 2"

FILENAME	215786-85E101
SCALE	3/8"=1'-0"

SHEET **85E101**

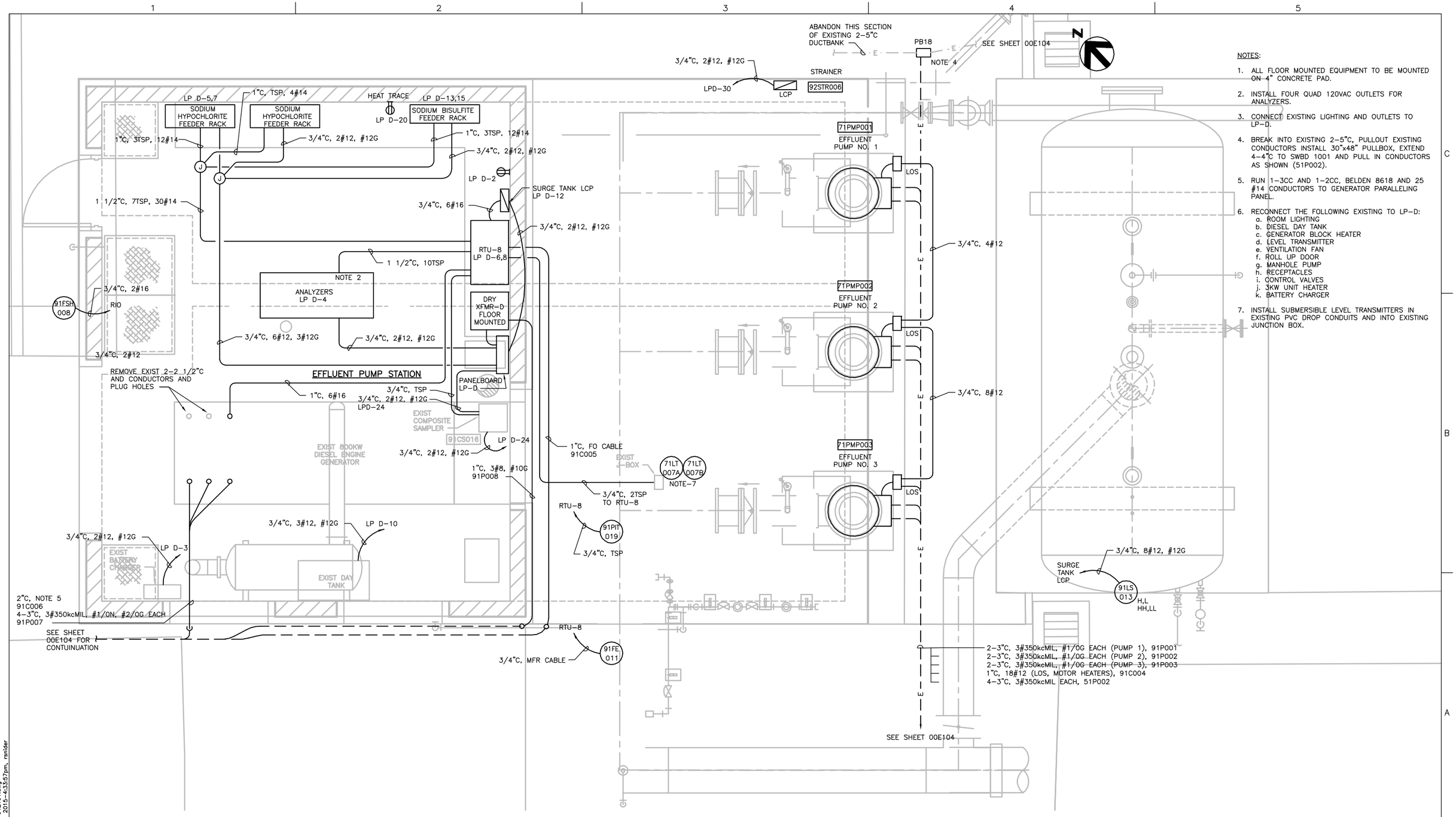

NOTES:

1. ALL FLOOR MOUNTED EQUIPMENT TO BE MOUNTED ON 4" CONCRETE PAD.
2. INSTALL FOUR QUAD 120VAC OUTLETS FOR ANALYZERS.
3. CONNECT EXISTING LIGHTING AND OUTLETS TO LP-D.
4. BREAK INTO EXISTING 2-5"C, PULLOUT EXISTING CONDUCTORS INSTALL 30"x48" PULLBOX, EXTEND 4-4"C TO SWBD 1001 AND PULL IN CONDUCTORS AS SHOWN (51P002).
5. RUN 1-3CC AND 1-2CC, BELDEN 8618 AND 25 #14 CONDUCTORS TO GENERATOR PARALLELING PANEL.
6. RECONNECT THE FOLLOWING EXISTING TO LP-D:
   a. ROOM LIGHTING
   b. DIESEL DAY TANK
   c. GENERATOR BLOCK HEATER
   d. LEVEL TRANSMITTER
   e. VENTILATION FAN
   f. ROLL UP DOOR
   g. MANHOLE PUMP
   h. RECEPTACLES
   i. CONTROL VALVES
   j. 3KW UNIT HEATER
   k. BATTERY CHARGER
7. INSTALL SUBMERSIBLE LEVEL TRANSMITTERS IN EXISTING PVC DROP CONDUITS AND INTO EXISTING JUNCTION BOX.

ELECTRICAL PLAN

FILE: 215786-91E101.dwg
DATE: Oct 06, 2015-4:33:57pm, rsnider

HDR Engineering, Inc.

ISSUE	DATE	DESCRIPTION
A	JUNE 2015	ISSUED FOR BID

PROJECT MANAGER	C. OLSON
DESIGNED	W.F. ETTLICH
DESIGNED	
CHECKED	L.D. SMITHEY
DRAWN	E.G. SESPENE
DATE	JUNE 30, 2015
PROJECT NUMBER	215786

REGISTERED PROFESSIONAL ENGINEER
THEODORE H. KONTOYERAS
NO. 29378
EXP. 06/30/17
MECHANICAL
STATE OF CALIFORNIA
06-30-15

CITY OF PINOLE CALIFORNIA 1903

PINOLE/HERCULES
WATER POLLUTION
CONTROL PLANT UPGRADE
CLIENT PN

ELECTRICAL

EFFLUENT PUMP STATION ELECTRICAL PLAN

0 1" 2"

FILENAME	215786-91E101
SCALE	1/2"=1'-0"

SHEET **91E101**

INSTRUMENT SYMBOLOGY

- LOCALLY MOUNTED FIELD INSTRUMENTATION
- MOUNTED ON PANEL FRONT
- MOUNTED INSIDE PANEL
- FRONT PANEL MOUNTED ON AUXILIARY PANEL (SUBSCRIPT INDICATES PANEL)
- MOUNTED INSIDE AUXILIARY PANEL
- PILOT LIGHT
- INSTRUMENT FUNCTIONS SHARING COMMON HOUSING
- COMPLEX INTERLOCK AS DEFINED IN CONTROL DIAGRAM OR IN SPECIFICATIONS
- SHARED DISPLAY, SHARED CONTROL, FIELD MOUNTED
- SHARED DISPLAY, SHARED CONTROL AT PRIMARY LOCATION – NORMALLY ACCESSIBLE TO OPERATOR (SCADA WORKSTATION)
- SHARED DISPLAY, SHARED CONTROL AT AUXILLIARY LOCATION – NORMALLY ACCESSIBLE TO OPERATOR (IPC, HMI)
- PROGRAMMABLE LOGIC CONTROL, PRIMARY LOCATION – NORMALLY INACCESSIBLE TO OPERATOR

PRIMARY ELEMENT SYMBOLOGY

- MAGNETIC FLOWMETER
- FLUME
- TEMPERATURE ELEMENT WITH THERMOWELL
- SIGHT FLOW GLASS
- CHEMICAL SEAL
- SUBMERSIBLE PUMP
- PROGRESSIVE CAVITY PUMP
- CENTRIFUGAL PUMP
- VERTICAL TURBINE PUMP
- METERING PUMP
- GATE

INSTRUMENT IDENTIFICATION LETTERS

	FIRST LETTER		SUCCEEDING LETTERS		
	MEASURED OR INITIATING VARIABLE	MODIFIER	READOUT OR PASSIVE FUNCTION	OUTPUT FUNCTION	MODIFIER
A	ANALYSIS		ALARM		
B	BURNER, COMBUSTION				
C				CONTROL	CLOSED
D		DIFFERENTIAL			
E	VOLTAGE		SENSOR (PRIMARY ELEMENT)		
F	FLOW RATE	RATIO (FRACTION)			
G			GLASS, VIEWING DEVICE		
H	HAND				HIGH
I	CURRENT (ELECTRICAL)		INDICATE		
J	POWER	SCAN			
K	TIME, TIME SCHEDULE	TIME; RATE OF CHANGE		CONTROL STATION	
L	LEVEL		LIGHT		LOW
M		MOMENTARY			MIDDLE, INTERMEDIATE
N					
O			ORIFICE, RESTRICTION		
P	PRESSURE, VACUUM		POINT (TEST) CONNECTION		
Q	QUANTITY	INTEGRATE, TOTALIZE			
R	RADIATION		RECORD		
S	SPEED, FREQUENCY	SAFETY		SWITCH	
T	TEMPERATURE			TRANSMIT	
U	MULTIVARIABLE		MULTIFUNCTION	MULTIFUNCTION	MULTIFUNCTION
V	VIBRATION, MECH. ANALYSIS			VALVE DAMPER, LOUVER	
W	WEIGHT, FORCE		WELL		
X		X–AXIS			
Y	EVENT, STATE OR PRESENCE	Y–AXIS		RELAY, COMPUTE, CONVERT	
Z	POSITION, DIMENSION	Z–AXIS		DRIVER, ACTUATOR UNCLASSIFIED FINAL CONTROL ELEMENT	

ACTUATOR SYMBOLOGY

- OPERATOR ABBREVIATIONS: M = MOTOR, P = PNEUMATIC, S = SOLENOID
- FLOAT OPERATOR
- SPRING–OPPOSED SINGLE–ACTING PNEUMATIC CYLINDER
- DOUBLE–ACTING PNEUMATIC CYLINDER
- PNEUMATIC DIAPHRAGM
- PNEUMATIC DIAPHRAGM WITH POSITIONER

TYPES OF POWER SUPPLY

A	PLANT COMPRESSED AIR
IA	INSTRUMENT AIR
ES	ELECTRICAL SUPPLY
NG	NATURAL GAS
HYD	HYDRAULIC

- AC – 120VAC POWER
- 480 – 480VAC POWER
- DC – 24VDC POWER

PLC INTERFACES

- ANALOG INPUT (4–20mA DC)
- ANALOG OUTPUT (4–20mA DC)
- DISCRETE INPUT (24VDC)
- DISCRETE OUTPUT (DRY CONTACT 120VAC)

CONTROL SWITCH NOTATION ABBREVIATIONS

XXX

ACK	ACKNOWLEDGE
ESTOP	EMERGENCY STOP
FAIL	FAILURE
FOR	FORWARD–OFF–REVERSE
FR	FORWARD–REVERSE
FS	FAST–SLOW
HA	HAND–AUTO
HOA	HAND–OFF–AUTO
HOR	HAND–OFF–REMOTE
HSE	EMERGENCY STOP
LL	LEAD–LAG
LLS	LEAD–LAG–STANDBY
LOR	LOCAL–OFF–REMOTE
LR	LOCAL–REMOTE
LS	LEAD–STANDBY
MA	MANUAL–AUTO
OAC	OPEN–AUTO–CLOSE
OC	OPEN–CLOSE
OO	ON–OFF
OSC	OPEN–STOP–CLOSE
RJ	RUN–JOG
RJR	RUN–JOG–REVERSE
SIL	SILENCE

VALVE AND GATE SYMBOLOGY

- AIR–RELEASE VACUUM VALVE (ARV = AIR RELEASE VALVE, VAC = VACUUM)
- BV – BALL VALVE
- BFV – BUTTERFLY VALVE
- CNV – CONE VALVE
- CV – CHECK VALVE
- DDCV – DOUBLE–DISK CHECK VALVE
- BCV – BALL CHECK VALVE
- DV – DIAPHRAGM VALVE
- GV – GATE VALVE
- GLV – GLOBE VALVE
- KGV – KNIFE GATE VALVE
- NV – NEEDLE VALVE
- PNV – PINCH VALVE
- PV – PLUG VALVE
- PRV – PRESSURE–REDUCING VALVE
- PRV – PRESSURE–REGULATING VALVE
- OR PRV – PRESSURE–RELIEF VALVE
- TWCV – THREE–WAY CONTROL VALVE
- Y–STRAINER
- FLEX COUPLING
- DRAIN
- SOLENOID VALVE
- ROTAMETER WITH BALL INDICATOR AND FLOW ADJUSTMENT

PROCESS AND INSTRUMENTATION ABBREVIATIONS

3W	CHLORINATED PLANT WATER
4W	NON–CHLORINATED PLANT WATER
ABI	AERATION BASIN INFLUENT
AI	ANALOG INPUT
AO	ANALOG OUTPUT
BNR	BIOLOGICAL NITROGEN REMOVAL
BSCR	BANDSCREEN
BYP	BYPASS
CA	COMPRESSED AIR
CHEMD	CHEMICAL DRAIN
CL2	CHLORINE (ANALYZER MODIFIER)
CLS	CHLORINE SOLUTION
CMP	COMPACTOR
CND	CONDENSER
COND	CONDUCTIVITY (ANALYZER MODIFIER)
CS	CONTACT STABILIZATION
CSL	CAUSTIC SOLUTION
CW	CITY WATER
D	DRAIN
DEN	DENSITY
DG	DIGESTER GAS
DI	DIGITAL INPUT
DO	DIGITAL OUTPUT
DO	DISSOLVED OXYGEN (ANALYZER MODIFIER)
DS	DIGESTED SLUDGE
E/P	VOLTAGE TO PNEUMATIC
FA	FOUL AIR
FECL3	FERRIC CHLORIDE
FE	FILTER EFFLUENT
FF	FILTER FEED
FO	FUEL OIL
FW	FEED WATER
GR	GRIT
GTSL	GRAVITY THICKENED SLUDGE
HPA	HIGH PRESSURE AIR
HW	HOT WATER
HWR	HOT WATER RETURN
HWS	HOT WATER SUPPLY
I/O	INPUT/OUTPUT
I/P	CURRENT TO PNEUMATIC
IA	INSTRUMENT AIR
LCP	LOCAL CONTROL PANEL
LO	LUBE OIL
LOX	LIQUID OXYGEN
LPA	LOW PRESSURE AIR
LPDG	LOW PRESSURE DIGESTER AIR
LSG	LOW PRESSURE SLUDGE GAS
MA	MURIATIC ACID
ML	MIXED LIQUOR
MXR	MIXER
N2	NITROGEN GAS
NC	NORMALLY CLOSE
NG	NATURAL GAS
NO	NORMALLY OPEN
OF	OVERFLOW
OF	OVERFLOW
OG	OFF GAS
OI	OPERATOR INTERFACE
P&ID	PROCESS AND INSTRUMENTATION DIAGRAM
PD	PLANT DRAIN
PE	PRIMARY EFFLUENT
PERM	PERMEATE
PI	PRIMARY INFLUENT
PSC	PRIMARY SCUM
PMP	PUMP
POL	POLYMER
POTW	POTABLE WATER
PS	PRIMARY SLUDGE
PW	PLANT WATER
RAS	RETURN ACTIVATED SLUDGE
REC	RECIRCULATION
RS	RAW SEWAGE
RW	RECLAIMED WATER
SAM	SAMPLE
SBS	SODIUM BISULFATE
SC	SCUM
SCR	SCREENINGS
SD	SANITARY DRAIN
SE	SECONDARY EFFLUENT
SEW	SEWER
SHC	SODIUM HYPOCHLORITE
SI	SECONDARY INFLUENT
SLG	SLIDE GATE, SLUICE GATE
SN	SUPERNATANT
SO	SLOPE OIL
SOD	SLOPE OIL DRAIN
SS	SUSPENDED SOLIDS (ANALYZER MODIFIER)
SWR	SOFTENED WATER
T	TANK
TS	THICKENED SLUDGE
TURB	TURBIDITY (ANALYZER MODIFIER)
TWAS	THICKENED WASTE ACTIVATED SLUDGE
V	VENT
WAS	WASTE ACTIVATED SLUDGE
WW	WASH WATER

LINE TYPES

- MAIN PROCESS LINE
- SECONDARY PROCESS LINE
- AUXILIARY PROCESS LINE
- DIRECTION OF FLOW
- PNEUMATIC SIGNAL
- ELECTRICAL SIGNAL
- 480V POWER
- HYDRAULIC SIGNAL
- SOFTWARE OR DATA LINK
- SIGNAL CONNECTION
- CROSSOVER – NO CONNECTION
- CAPILLARY
- MECHANICAL LINK
- ETHERNET I/O DATA LINK
- DEVICENET DATA LINK
- SERIAL RS232 LINK
- FIBER OPTIC

CROSS REFERENCE SYMBOLOGY

- SEQUENCE NUMBER
- CONTINUATION FROM DRAWING XXIXXX
- SEQUENCE NUMBER
- CONTINUATION TO DRAWING XXIXXX

GENERAL NOTES

1. THIS IS A STANDARD INSTRUMENTATION SYMBOLOGY AND ABBREVIATIONS SHEET. LISTING OF SYMBOLS AND ABBREVIATIONS DOES NOT IMPLY ALL SYMBOLS AND ABBREVIATIONS HAVE BEEN USED ON THIS PROJECT.
2. SEE PROCESS, MECHANICAL AND PLUMBING LEGEND DRAWINGS FOR MISCELLANEOUS PIPING SYMBOLS.
3. SCREENING OR SHADING OF WORK IS USED TO INDICATE EXISTING COMPONENTS OR TO DE–EMPHASIZE PROPOSED IMPROVEMENTS TO HIGHLIGHT SELECTED TRADE WORK. REFER TO CONTEXT OF EACH DRAWING FOR USAGE.
4. VALVE SYMBOLS SHOWN HERE ARE APPLICABLE ONLY TO INSTRUMENTATION DIAGRAMS. SEE PROCESS, MECHANICAL AND PLUMBING LEGEND SHEET FOR VALVE SYMBOLS USED ELSEWHERE ON THE DRAWINGS.

FILE: 215786–001001.dwg
DATE: Oct 06, 2015–4:36:19pm, rsnider

HDR Engineering, Inc.

ISSUE	DATE	DESCRIPTION
A	JUNE–2015	ISSUED FOR BID

PROJECT MANAGER	C. OLSON
DESIGNED	W.F. ETTLICH
DESIGNED	
CHECKED	L.D. SMITHEY
DRAWN	E.G. SESPENE
DATE	JUNE 30, 2015
PROJECT NUMBER	215786

REGISTERED PROFESSIONAL ENGINEER — WILLIAM F. ETTLICH — NO. 07625 EXP. 09/30/16 — ELECTRICAL — STATE OF CALIFORNIA — 06-30-15

CITY OF PINOLE CALIFORNIA 1903

PINOLE/HERCULES WATER POLLUTION CONTROL PLANT UPGRADE
CLIENT PN

INSTRUMENTATION

PROCESS AND INSTRUMENTATION DIAGRAM SYMBOLS LEGEND AND ABBREVIATIONS

0 1" 2"

FILENAME	215786–001001
SCALE	NTS

SHEET 00I001

NOTES:

1. TERMINATE ALL FO CABLE FIBERS AT BOTH ENDS.

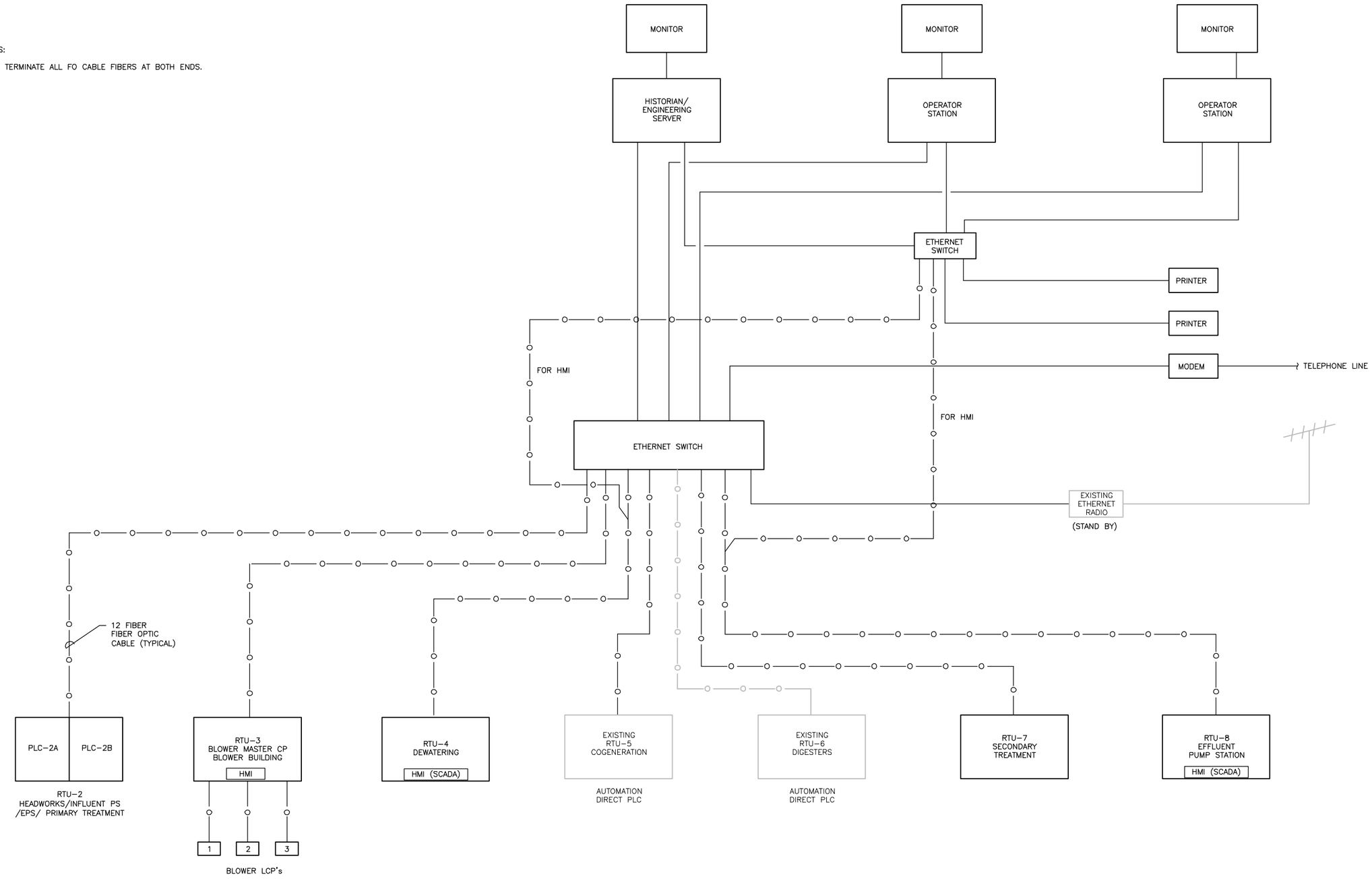

FILE: 215786-001006.dwg
DATE: Oct 06, 2015--4:36:24pm, rsnider

HDR Engineering, Inc.

ISSUE	DATE	DESCRIPTION
A	JUNE 2015	ISSUED FOR BID

PROJECT MANAGER	C. OLSON
DESIGNED	W.F. ETTLICH
DESIGNED	
CHECKED	L.D. SMITHEY
DRAWN	E.G. SESPENE
DATE	JUNE 30, 2015
PROJECT NUMBER	215786

REGISTERED PROFESSIONAL ENGINEER
WILLIAM F. ETTLICH
NO. 07625
EXP. 09/30/16
ELECTRICAL
STATE OF CALIFORNIA
06-30-15

CITY OF PINOLE CALIFORNIA 1903

PINOLE/HERCULES
WATER POLLUTION
CONTROL PLANT UPGRADE
CLIENT PN

INSTRUMENTATION

PROCESS AND INSTRUMENTATION DIAGRAM SCADA BLOCK DIAGRAM

0 1" 2"

FILENAME	215786-001006
SCALE	NTS

SHEET **001006**

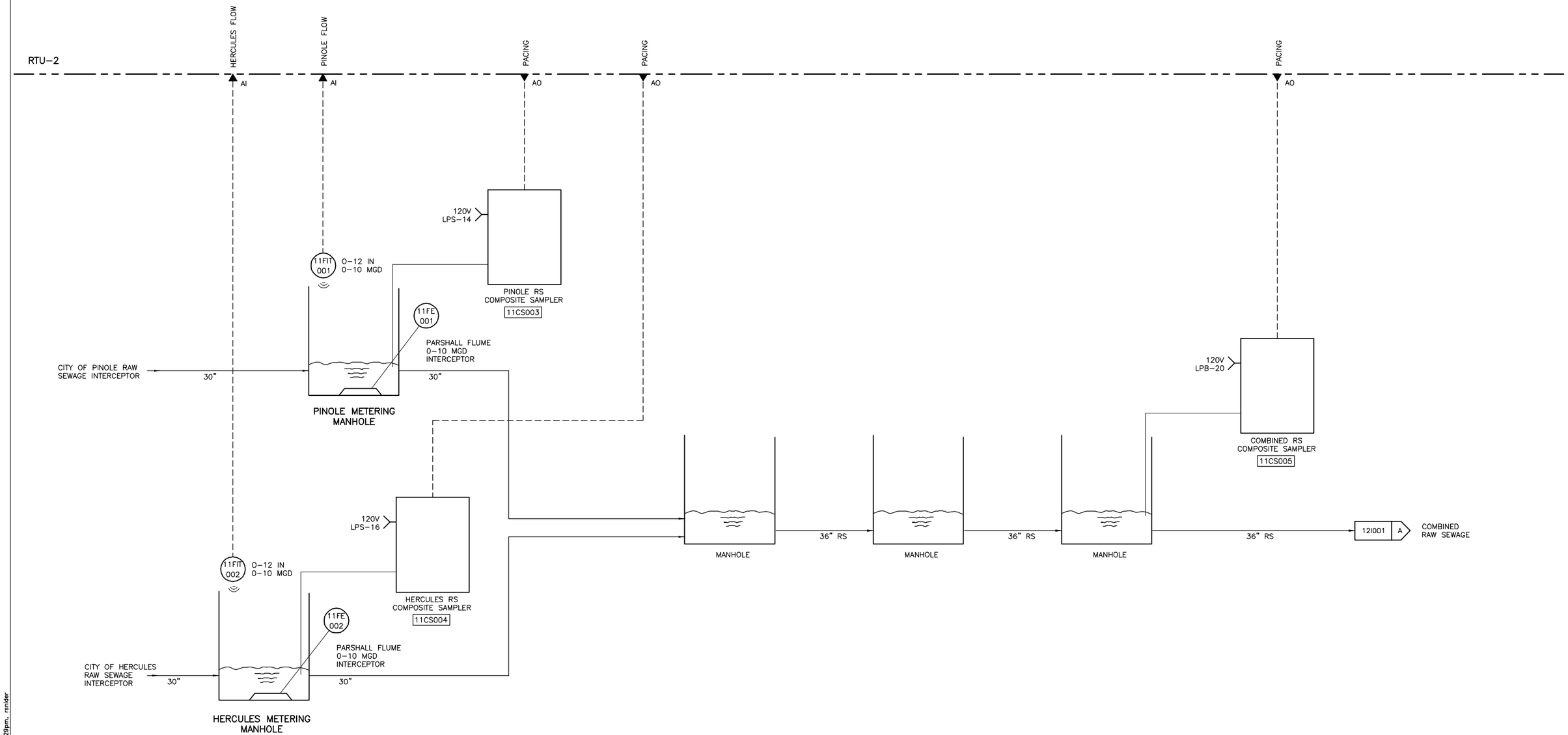

FILE: 215786–11I101.dwg
DATE: Oct 06, 2015–4:36:29pm, rsnider

HDR Engineering, Inc.

ISSUE	DATE	DESCRIPTION
A	JUNE 2015	ISSUED FOR BID

PROJECT MANAGER	C. OLSON
DESIGNED	W.F. ETTLICH
DESIGNED	
CHECKED	L.D. SMITHEY
DRAWN	E.G. SESPENE
DATE	JUNE 30, 2015
PROJECT NUMBER	215786

REGISTERED PROFESSIONAL ENGINEER
WILLIAM F. ETTLICH
NO. 07625
EXP. 09/30/16
ELECTRICAL
STATE OF CALIFORNIA
06-30-15

CITY OF PINOLE CALIFORNIA 1903

PINOLE/HERCULES
WATER POLLUTION
CONTROL PLANT UPGRADE
CLIENT PN

INSTRUMENTATION

PROCESS AND INSTRUMENTATION DIAGRAM
RAW SEWAGE FLOW

0 1" 2"

FILENAME	215786–11I101
SCALE	NTS

SHEET **11I101**

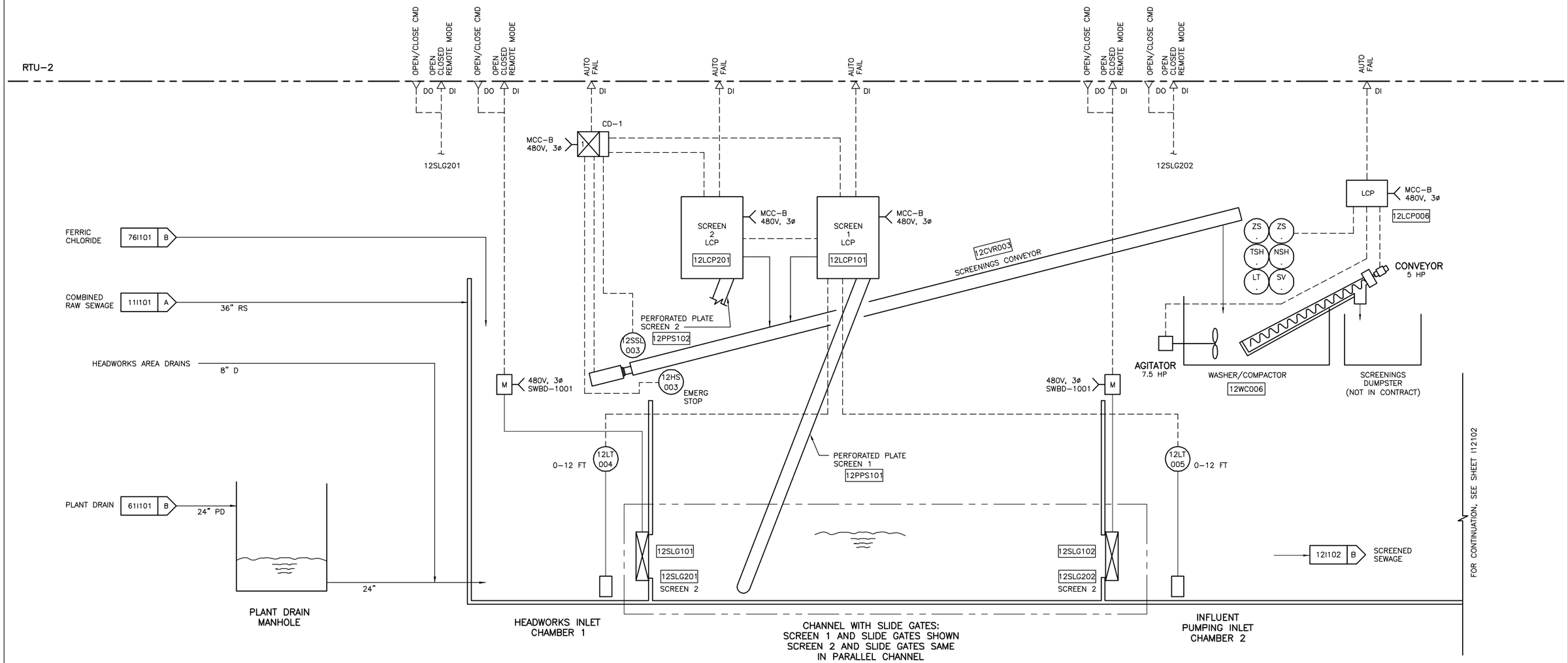

FILE: 215786–12I101.dwg
DATE: Oct 06, 2015–4:36:34pm, rander

HDR Engineering, Inc.

ISSUE	DATE	DESCRIPTION
A	JUNE 2015	ISSUED FOR BID

PROJECT MANAGER	C. OLSON
DESIGNED	W.F. ETTLICH
DESIGNED	
CHECKED	L.D. SMITHEY
DRAWN	E.G. SESPENE
DATE	JUNE 30, 2015
PROJECT NUMBER	215786

REGISTERED PROFESSIONAL ENGINEER
WILLIAM F. ETTLICH
NO. 07625
EXP. 09/30/16
ELECTRICAL
STATE OF CALIFORNIA
06-30-15

CITY OF PINOLE CALIFORNIA 1903

PINOLE/HERCULES
WATER POLLUTION
CONTROL PLANT UPGRADE
CLIENT PN

INSTRUMENTATION

PROCESS AND INSTRUMENTATION DIAGRAM
RAW SEWAGE SCREENING

0 1" 2"

FILENAME	215786–12I101
SCALE	NTS

SHEET **12I101**

RTU-2

OPEN DI | CLOSED DI | OPEN DI | CLOSED DI

480V, 3ø — M — M — 480V, 3ø

FOR CONTINUATION, SEE SHEET 12I101

12SLG204

12SLG203

SCREENED SEWAGE — 12I101 B

INFLUENT PUMPING
INLET CHAMBER 2

WETWELL 1A HIGH LEVEL DI | WETWELL 1A LOW LEVEL DI | WETWELL 1A LEVEL AI | SPEED CMD AO | START/STOP DO | AUTO RUN FAIL DI | SPEED AI | SPEED CMD AO | START/STOP DO | AUTO RUN FAIL DI | SPEED AI

VFD 480V, 3ø — MCC–B CD–2 CD–13

VFD 480V, 3ø — MCC–B CD–2 CD–13

12LT 310 0–16 FT

12LSL 311

12LSH 311

SET: EL103

TSH

MSH

TSH

MSH

SET: EL

18" RS — 13I101 C — TO GRIT REMOVAL

18" RS — 13I101 D

INFLUENT PUMP 1 60 HP — 12PMP301

INFLUENT PUMP 2 60 HP — 12PMP302

INFLUENT PUMPING
WETWELL 1A

WETWELL 1B HIGH LEVEL DI | WETWELL 1B LOW LEVEL DI | WETWELL 1B LEVEL AI | SPEED CMD AO | START/STOP DO | AUTO RUN FAIL DI | SPEED AI | SPEED CMD AO | START/STOP DO | AUTO RUN FAIL DI | SPEED AI

VFD 480V, 3ø — MCC–B CD–2 CD–13

VFD 480V, 3ø — MCC–B CD–2 CD–13

12LT 312 0–16 FT

12LSL 313

12LSH 313

SET: EL103

TSH

MSH

TSH

MSH

SET: EL

18" RS — 13I101 E — TO GRIT REMOVAL

18" RS — 13I101 F

INFLUENT PUMP 3 60 HP — 12PMP303

INFLUENT PUMP 4 60 HP — 12PMP304

INFLUENT PUMPING
WETWELL 1B

FILE: 215786-12I102.dwg
DATE: Oct 06, 2015-4:36:39pm, rsnider

HDR Engineering, Inc.

ISSUE	DATE	DESCRIPTION
A	JUNE 2015	ISSUED FOR BID

PROJECT MANAGER	C. OLSON
DESIGNED	W.F. ETTLICH
DESIGNED	
CHECKED	L.D. SMITHEY
DRAWN	E.G. SESPENE
DATE	JUNE 30, 2015
PROJECT NUMBER	215786

REGISTERED PROFESSIONAL ENGINEER
WILLIAM F. ETTLICH
NO. 07625
EXP. 09/30/16
ELECTRICAL
STATE OF CALIFORNIA
06-30-15

CITY OF PINOLE CALIFORNIA 1903

PINOLE/HERCULES
WATER POLLUTION
CONTROL PLANT UPGRADE
CLIENT PN

INSTRUMENTATION

PROCESS AND INSTRUMENTATION DIAGRAM
INFLUENT PUMP STATION

0 1" 2"

FILENAME	215786-12I102
SCALE	NTS

SHEET 12I102

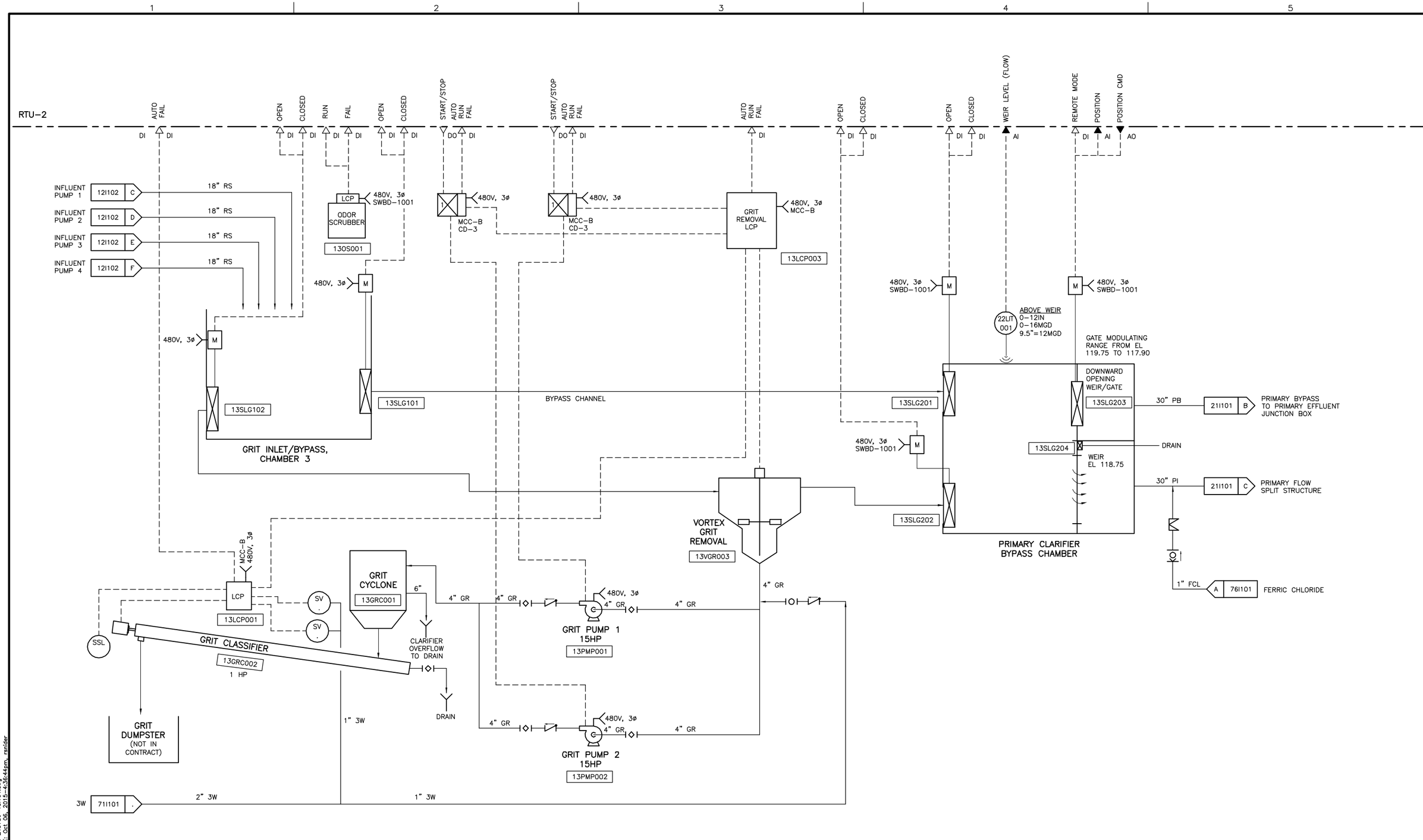

FILE: 215786-13I101.dwg
DATE: Oct 06, 2015-4:36:44pm, rsnider

HDR
HDR Engineering, Inc.

ISSUE	DATE	DESCRIPTION
A	JUNE 2015	ISSUED FOR BID

PROJECT MANAGER	C. OLSON
DESIGNED	W.F. ETTLICH
DESIGNED	
CHECKED	L.D. SMITHEY
DRAWN	E.G. SESPENE
DATE	JUNE 30, 2015
PROJECT NUMBER	215786

REGISTERED PROFESSIONAL ENGINEER
WILLIAM F. ETTLICH
NO. 07625
EXP. 09/30/16
ELECTRICAL
STATE OF CALIFORNIA
06-30-15

CITY OF PINOLE CALIFORNIA 1903

PINOLE/HERCULES
WATER POLLUTION
CONTROL PLANT UPGRADE
CLIENT PN

INSTRUMENTATION

PROCESS AND INSTRUMENTATION DIAGRAM
GRIT REMOVAL

0 1" 2"

FILENAME	215786-13I101
SCALE	NTS

SHEET
13I101

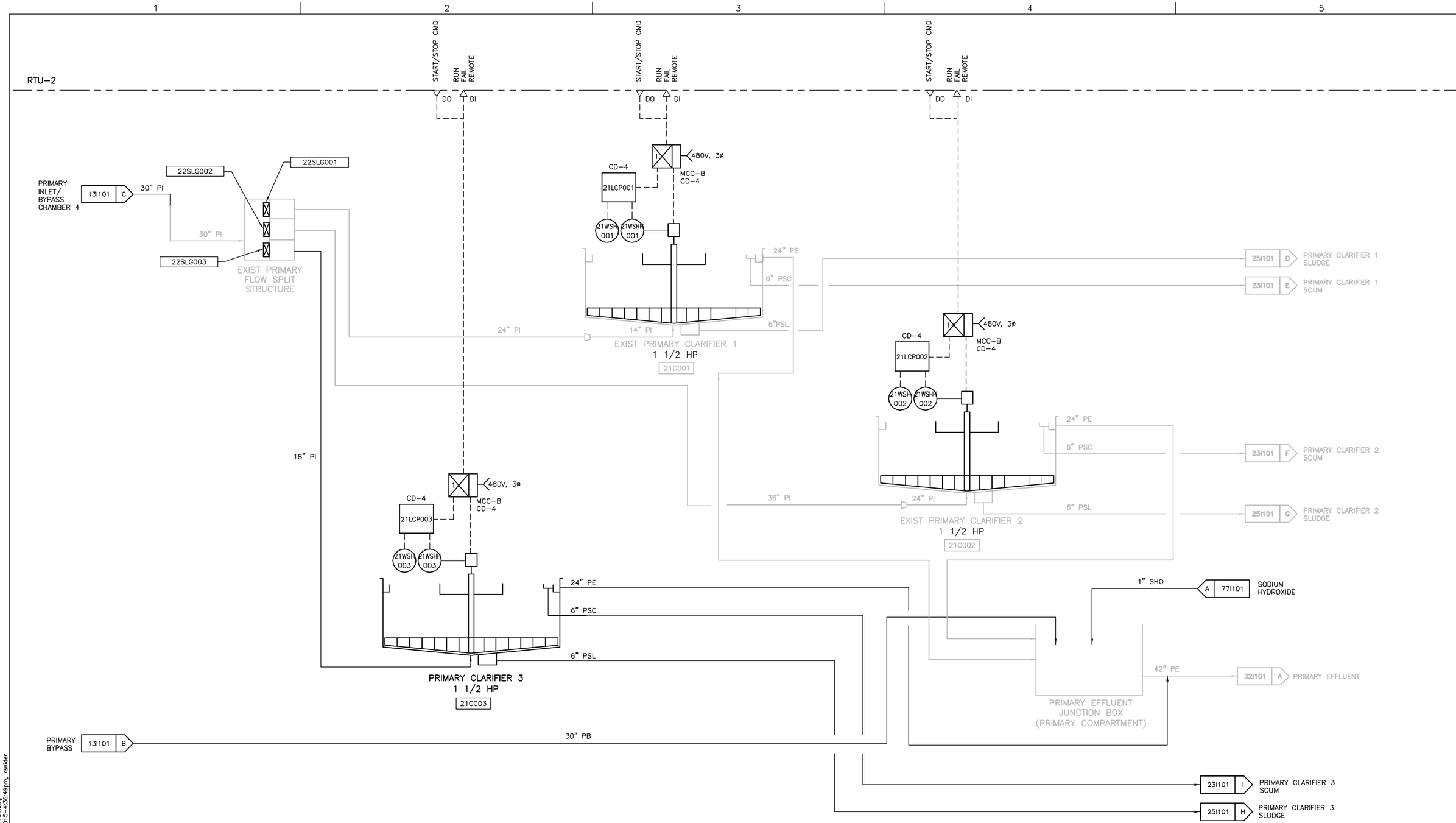

FILE: 215786-21I101.dwg
DATE: Oct 06, 2015-4:36:49pm, rsnider

HDR
HDR Engineering, Inc.

ISSUE	DATE	DESCRIPTION
A	JUNE 2015	ISSUED FOR BID

PROJECT MANAGER	C. OLSON
DESIGNED	W.F. ETTLICH
DESIGNED	
CHECKED	L.D. SMITHEY
DRAWN	E.G. SESPENE
DATE	JUNE 30, 2015
PROJECT NUMBER	215786

REGISTERED PROFESSIONAL ENGINEER
WILLIAM F. ETTLICH
NO. 07625
EXP. 09/30/16
ELECTRICAL
STATE OF CALIFORNIA
06-30-15

CITY OF PINOLE CALIFORNIA 1903

PINOLE/HERCULES
WATER POLLUTION
CONTROL PLANT UPGRADE
CLIENT PN

INSTRUMENTATION

PROCESS AND INSTRUMENTATION DIAGRAM
PRIMARY CLARIFICATION

0 1" 2"

FILENAME	215786-21I101
SCALE	NTS

SHEET
21I101

RTU 2

LEVEL
AI

START CYCLE
AUTO
RUN
FAIL
DO
DI

480V, 3ø
MCC–B
CD–5

23LT
005
0–10 FT

EXIST PRIMARY SCUM
PIT 1

PRIMARY CLARIFIER 1
SCUM
211101 E
6" PSC

PRIMARY CLARIFIER 2
SCUM
211101 F
6" PSL

PRIMARY CLARIFIER 3
SCUM
211101 I
6" PSC

23HS
002A
LOS

23HS
002B
LOCAL
RUN

0–15 FT
23LT
006

TSH

PRIMARY
SCUM PUMP 2
5 HP
23PMP002

PRIMARY SCUM PIT 2

23HS
001B
LOCAL
RUN

480V, 3ø
MCC–B
CD–6

23HS
001A
LOS

6" PSC

23TSH
001

PRIMARY SCUM PUMP 1
5 HP
23PMP001

SET
40PSI
23PSH
008

23PI
008
0–60PSI

1" ARV

4" PSC

4" PSC

SCUM TO
DIGESTERS

4" PSC
H 611101
SCUM FROM GRAVITY
SLUDGE THICKENER

23PI
009
0–60 PSI

1" ARV

4" PSC

FILE: 215786–23I101.dwg
DATE: Oct 06, 2015–4:36:54pm, rsnider

HDR Engineering, Inc.

ISSUE	DATE	DESCRIPTION
A	JUNE 2015	ISSUED FOR BID

PROJECT MANAGER	C. OLSON
DESIGNED	W.F. ETTLICH
DESIGNED	
CHECKED	L.D. SMITHEY
DRAWN	E.G. SESPENE
DATE	JUNE 30, 2015
PROJECT NUMBER	215786

REGISTERED PROFESSIONAL ENGINEER
WILLIAM F. ETTLICH
NO. 07625
EXP. 09/30/16
ELECTRICAL
STATE OF CALIFORNIA

CITY OF PINOLE CALIFORNIA 1903

PINOLE/HERCULES
WATER POLLUTION
CONTROL PLANT UPGRADE
CLIENT PN

INSTRUMENTATION

PROCESS AND INSTRUMENTATION DIAGRAM
PRIMARY SCUM PUMPING

0 1" 2"

FILENAME	215786–23I101
SCALE	NTS

SHEET
23I101

1 2 3 4 5

RTU-2

START/STOP CMD
AUTO
RUN
FAIL
DO DI

480V, 3ø
MCC-B
CD-3

25PI 007 0-60PSI
25HS 001 LOS
6" PSL
4" PSL
PRIMARY SLUDGE PUMP 1
20 HP
25PMP001

PRIMARY CLARIFIER 1 SLUDGE
21I101 D 6" PSL
N.O.
PRIMARY CLARIFIER 2 SLUDGE
21I101 D 6" PSL

25PI 008 0-60PSI
25HS 002 LOS
6" PSL
4" PSL
PRIMARY SLUDGE PUMP 2
20 HP
25PMP002

PRIMARY CLARIFIER 3 SLUDGE
21I101 H 6" PSL

25PI 009 0-60PSI
25HS 003 LOS
6" PSL
4" PSL
PRIMARY SLUDGE PUMP 3
20 HP
25PMP003

25PI 010 0-60PSI
25HS 004 LOS
6" PSL
4" PSL
PRIMARY SLUDGE PUMP 4
20 HP
25PMP004

4" PSL
61I101 A TO GRAVITY THICKENING

FILE: 215786-25I101.dwg
DATE: Oct 06, 2015-4:36:59pm, ranider

HDR Engineering, Inc.

ISSUE	DATE	DESCRIPTION
A	JUNE 2015	ISSUED FOR BID

PROJECT MANAGER	C. OLSON
DESIGNED	W.F. ETTLICH
DESIGNED	
CHECKED	L.D. SMITHEY
DRAWN	E.G. SESPENE
DATE	JUNE 30, 2015
PROJECT NUMBER	215786

REGISTERED PROFESSIONAL ENGINEER
WILLIAM F. ETTLICH
NO. 07625
EXP. 09/30/16
ELECTRICAL
STATE OF CALIFORNIA
06-30-15

CITY OF PINOLE CALIFORNIA 1903

PINOLE/HERCULES
WATER POLLUTION
CONTROL PLANT UPGRADE
CLIENT PN

INSTRUMENTATION

PROCESS AND INSTRUMENTATION DIAGRAM
PRIMARY SLUDGE PUMPING

0 1" 2"

FILENAME	215786-25I101
SCALE	NTS

SHEET
25I101

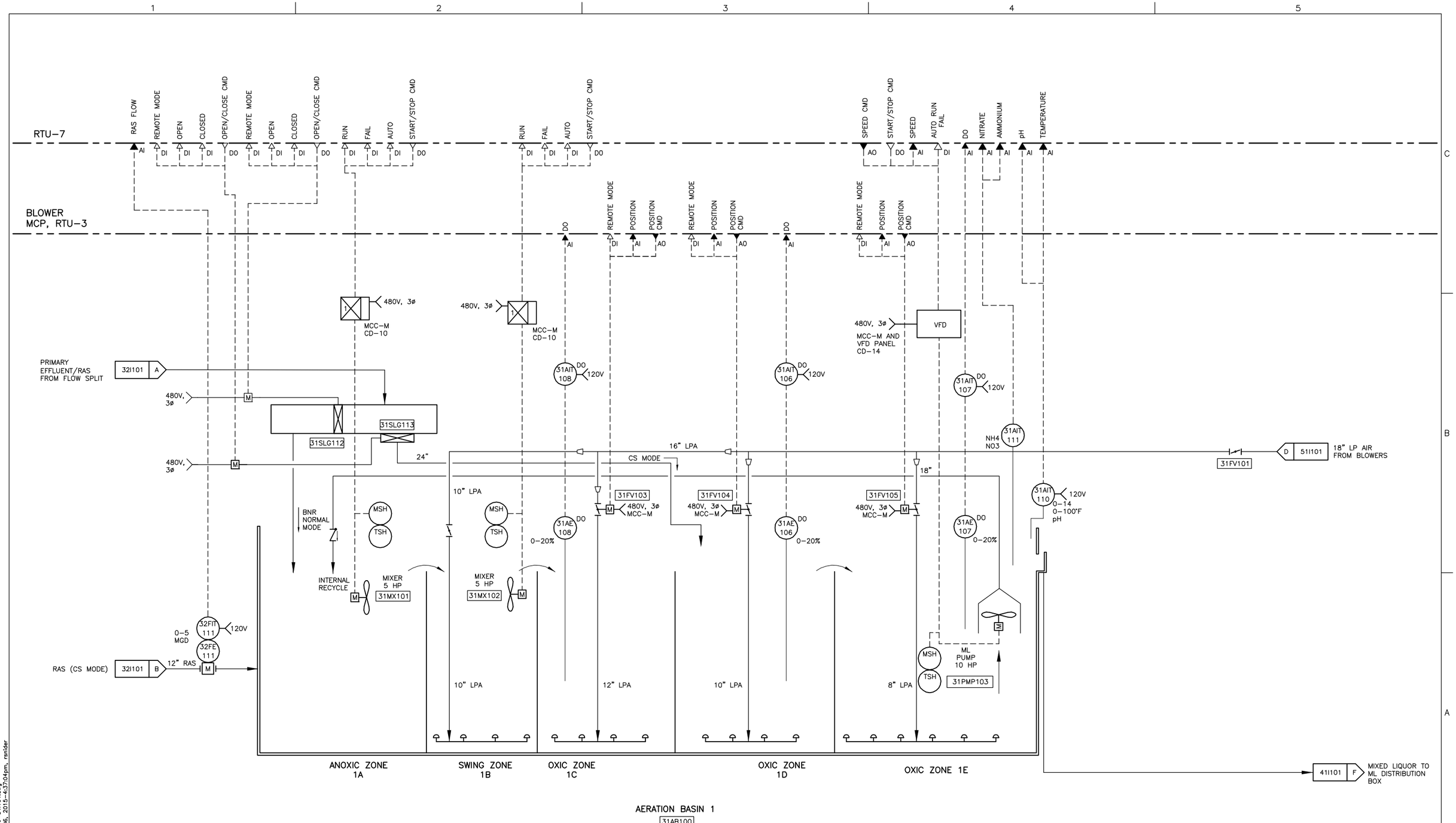

FILE: 215786-31I101.dwg
DATE: Oct 06, 2015-4:37:04pm, ranider

HDR Engineering, Inc.

ISSUE	DATE	DESCRIPTION
A	JUNE 2015	ISSUED FOR BID

PROJECT MANAGER	C. OLSON
DESIGNED	W.F. ETTLICH
DESIGNED	
CHECKED	L.D. SMITHEY
DRAWN	E.G. SESPENE
DATE	JUNE 30, 2015
PROJECT NUMBER	215786

REGISTERED PROFESSIONAL ENGINEER
WILLIAM F. ETTLICH
NO. 07625
EXP. 09/30/16
ELECTRICAL
STATE OF CALIFORNIA

CITY OF PINOLE CALIFORNIA 1903

PINOLE/HERCULES
WATER POLLUTION
CONTROL PLANT UPGRADE
CLIENT PN

INSTRUMENTATION

PROCESS AND INSTRUMENTATION DIAGRAM AERATION BASIN 1

0 1" 2"

FILENAME	215786-31I101
SCALE	NTS

SHEET **31I101**

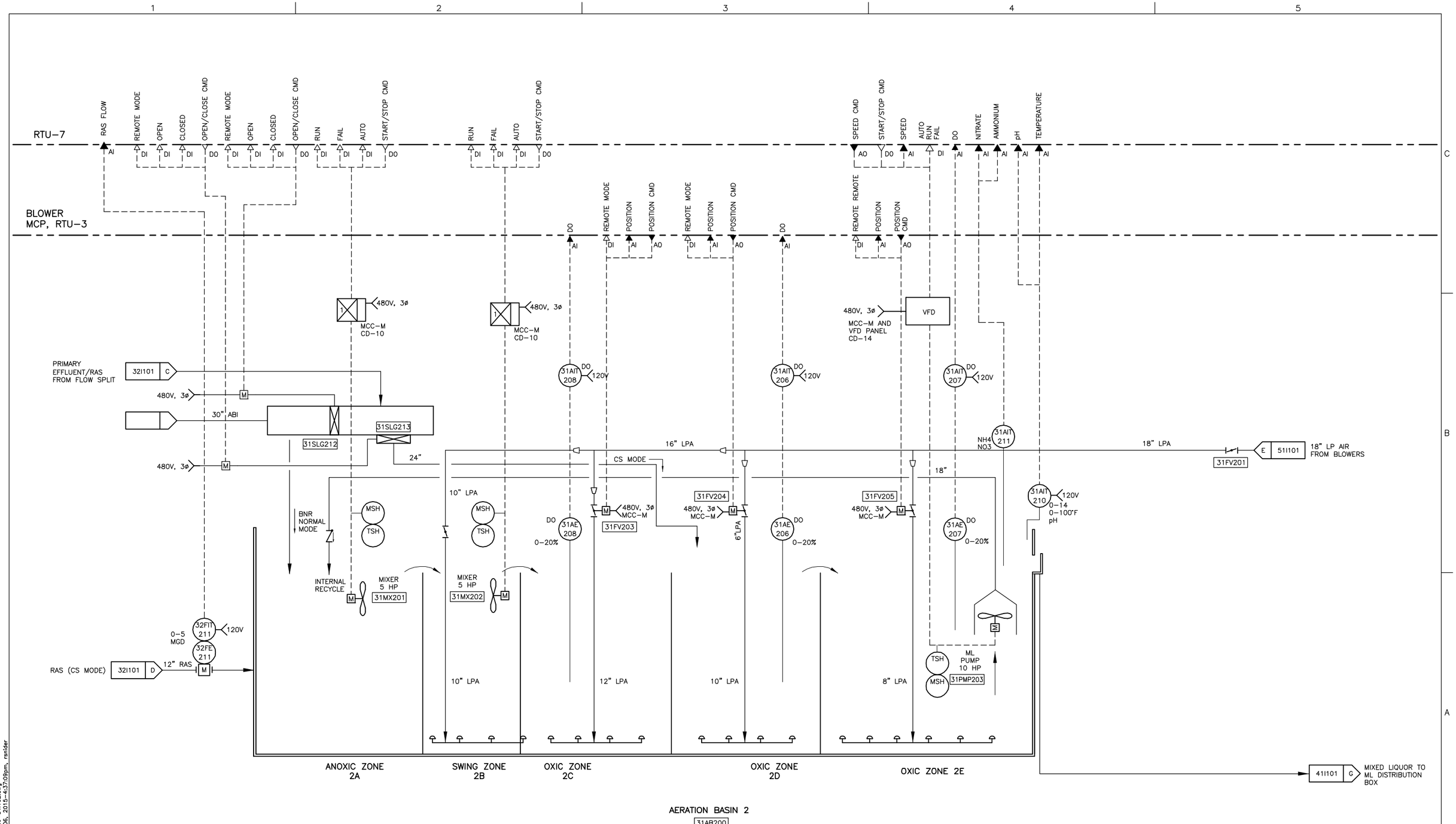

FILE: 215786-31I102.dwg
DATE: Oct 06, 2015-4:37:09pm, ranider

HDR Engineering, Inc.

ISSUE	DATE	DESCRIPTION
A	JUNE 2015	ISSUED FOR BID

PROJECT MANAGER	C. OLSON
DESIGNED	W.F. ETTLICH
DESIGNED	
CHECKED	L.D. SMITHEY
DRAWN	E.G. SESPENE
DATE	JUNE 30, 2015
PROJECT NUMBER	215786

REGISTERED PROFESSIONAL ENGINEER
WILLIAM T. ETTLICH
NO. 07625
EXP. 09/30/16
ELECTRICAL
STATE OF CALIFORNIA
06-30-15

CITY OF PINOLE CALIFORNIA 1903

PINOLE/HERCULES
WATER POLLUTION
CONTROL PLANT UPGRADE
CLIENT PN

INSTRUMENTATION

PROCESS AND INSTRUMENTATION DIAGRAM AERATION BASIN 2

0 1" 2"

FILENAME	215786-31I102
SCALE	NTS

SHEET **31I102**

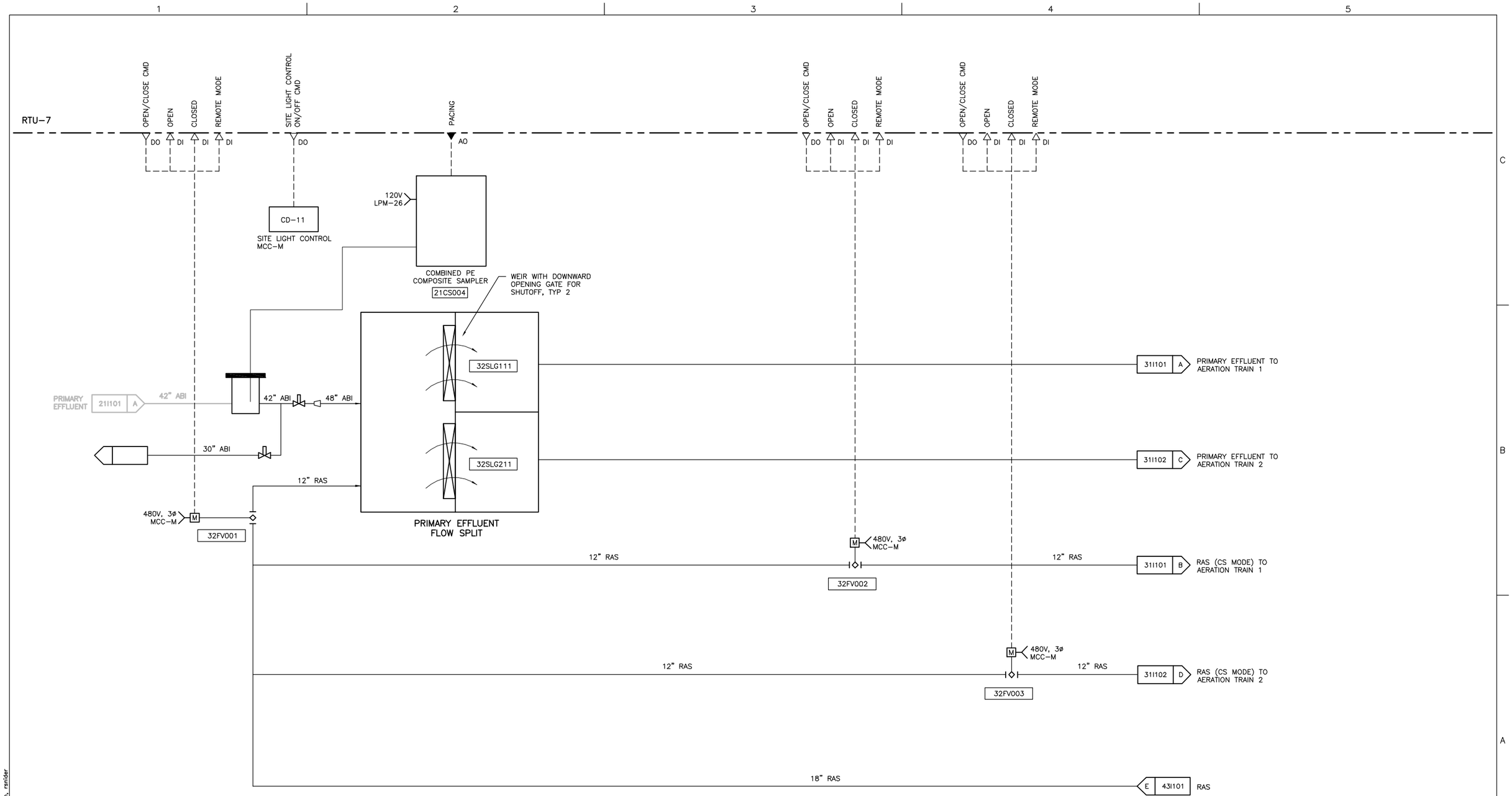

FILE: 215786-32I101.dwg
DATE: Oct 06, 2015-4:37:14pm, rsnider

HDR
HDR Engineering, Inc.

ISSUE	DATE	DESCRIPTION
A	JUNE 2015	ISSUED FOR BID

PROJECT MANAGER	C. OLSON
DESIGNED	W.F. ETTLICH
DESIGNED	
CHECKED	L.D. SMITHEY
DRAWN	E.G. SESPENE
DATE	JUNE 30, 2015
PROJECT NUMBER	215786

REGISTERED PROFESSIONAL ENGINEER
WILLIAM F. ETTLICH
NO. 07625
EXP. 09/30/16
ELECTRICAL
STATE OF CALIFORNIA
06-30-15

CITY OF PINOLE CALIFORNIA 1903

PINOLE/HERCULES
WATER POLLUTION
CONTROL PLANT UPGRADE
CLIENT PN

INSTRUMENTATION

PROCESS AND INSTRUMENTATION DIAGRAM
PRIMARY EFFLUENT AND RAS FLOW SPLIT

0 1" 2"

FILENAME	215786-32I101
SCALE	AS NOTED

SHEET
32I101

RTU-7

START/STOP CMD — DO
FAIL — DI
RUN — DI
AUTO — DI

START/STOP CMD — DO
RUN — DI
FAIL — DI
REMOTE — DI

START/STOP CMD — DO
RUN — DI
FAIL — DI
REMOTE — DI

480V, 3ø
MCC-M
CD-4
41LCP 001
41WSH 001
41WSHP 001

STOP PLATES USED TO ISOLATE EACH CLARIFIER

SC1
SC2
SC3
SC4
SC5

30" ML
30" ML

1" 3W
36" SE
6" SC
12" RAS
36" ML

41I102 H — SECONDARY EFFLUENT
12I101 B — SCUM TO PLANT DRAIN
42I101 D — RAS TO PUMPING

SECONDARY CLARIFIER 1
1 HP
41C001

31SLG115
31SLG215

1 — 31I101 F
2 — 31I102 G

MIXED LIQUOR FROM AERATION TRAINS

MIXED LIQUOR SPLIT BOX

480V, 3ø
MCC-M
LCP

3"LPA

CHANNEL AERATION BLOWER
10 HP
32B001

480V, 3ø
MCC-M
CD-4
41LCP 002
41WSH 002
41WSHP 002

1" 3W
2" 3W
C — 71I101 — 3W

36" SE
6" SC
12" RAS
36" ML

41I102 I — SECONDARY EFFLUENT
12I101 B — SCUM TO PLANT DRAIN
42I101 E — RAS TO PUMPING

SECONDARY CLARIFIER 2
1 HP
41C002

MIXED LIQUOR TO SECONDARY CLARIFIER 5 — C 41I102 — 24" ML

MIXED LIQUOR TO SECONDARY CLARIFIER 4 — B 41I102 — 24" ML

MIXED LIQUOR TO SECONDARY CLARIFIER 3 — A 41I102 — 24" ML

FILE: 215786-41I101.dwg
DATE: Oct 06, 2015-4:37:19pm, rander

HDR Engineering, Inc.

ISSUE	DATE	DESCRIPTION
A	JUNE 2015	ISSUED FOR BID

PROJECT MANAGER	C. OLSON
DESIGNED	W.F. ETTLICH
DESIGNED	
CHECKED	L.D. SMITHEY
DRAWN	E.G. SESPENE
DATE	JUNE 30, 2015
PROJECT NUMBER	215786

REGISTERED PROFESSIONAL ENGINEER — WILLIAM F. ETTLICH — NO. 07625 EXP. 09/30/16 — ELECTRICAL — STATE OF CALIFORNIA — 06-30-15

CITY OF PINOLE CALIFORNIA 1903

PINOLE/HERCULES WATER POLLUTION CONTROL PLANT UPGRADE
CLIENT PN

INSTRUMENTATION

PROCESS AND INSTRUMENTATION DIAGRAM SECONDARY CLARIFICATION 1

0 1" 2"

FILENAME	215786-41I101
SCALE	NTS

SHEET 41I101

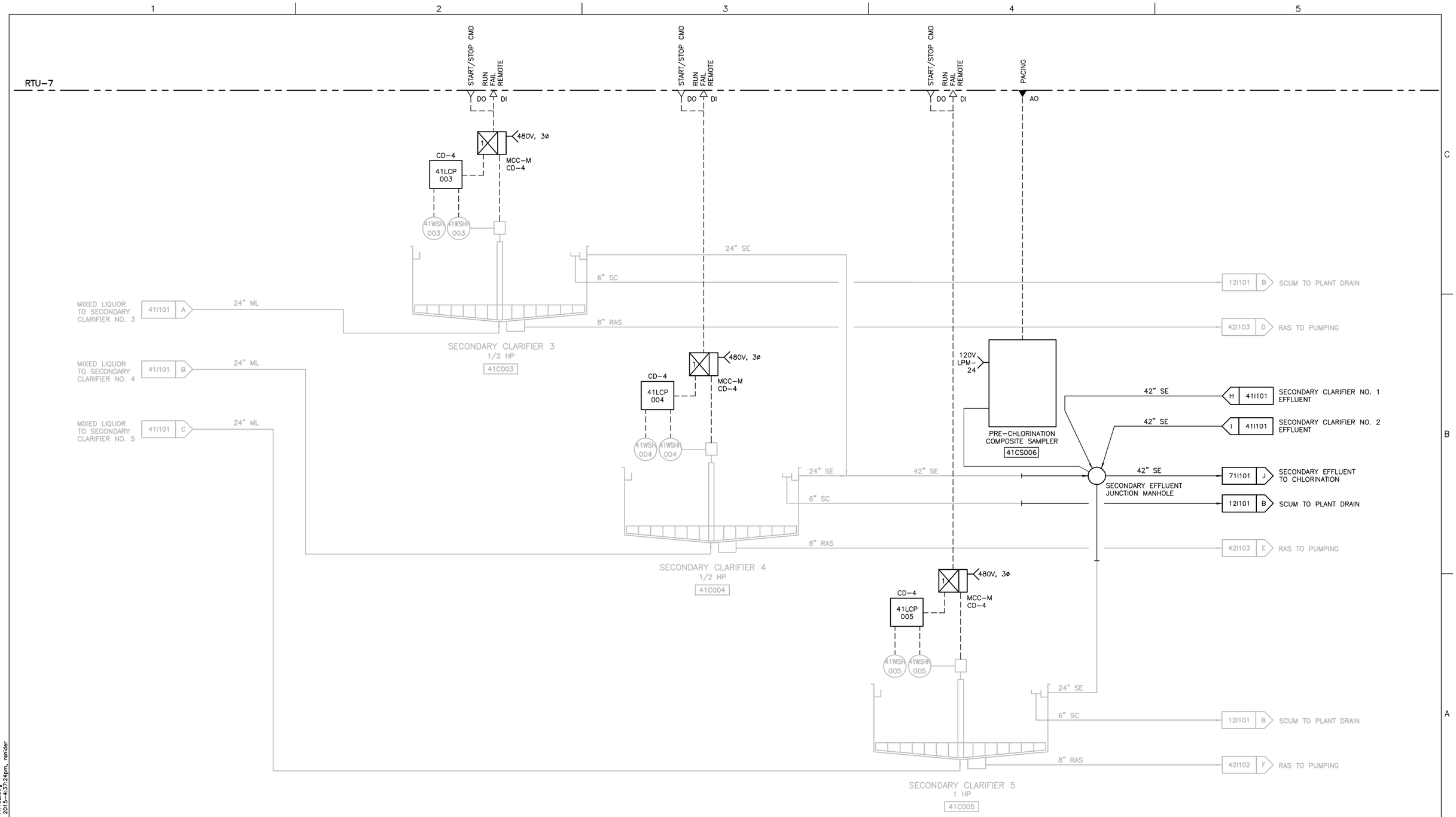

FILE: 215786-41I102.dwg
DATE: Oct 06, 2015-4:37:24pm, rsnider

HDR
HDR Engineering, Inc.

ISSUE	DATE	DESCRIPTION
A	JUNE 2015	ISSUED FOR BID

PROJECT MANAGER	C. OLSON
DESIGNED	W.F. ETTLICH
DESIGNED	
CHECKED	L.D. SMITHEY
DRAWN	E.G. SESPENE
DATE	JUNE 30, 2015
PROJECT NUMBER	215786

REGISTERED PROFESSIONAL ENGINEER
WILLIAM F. ETTLICH
NO. 07625
EXP. 09/30/16
ELECTRICAL
STATE OF CALIFORNIA
06-30-15

CITY OF PINOLE CALIFORNIA 1903

PINOLE/HERCULES
WATER POLLUTION
CONTROL PLANT UPGRADE
CLIENT PN

INSTRUMENTATION

PROCESS AND INSTRUMENTATION DIAGRAM
SECONDARY CLARIFICATION 2

0 1" 2"

FILENAME	215786-41I102
SCALE	NTS

SHEET
41I102

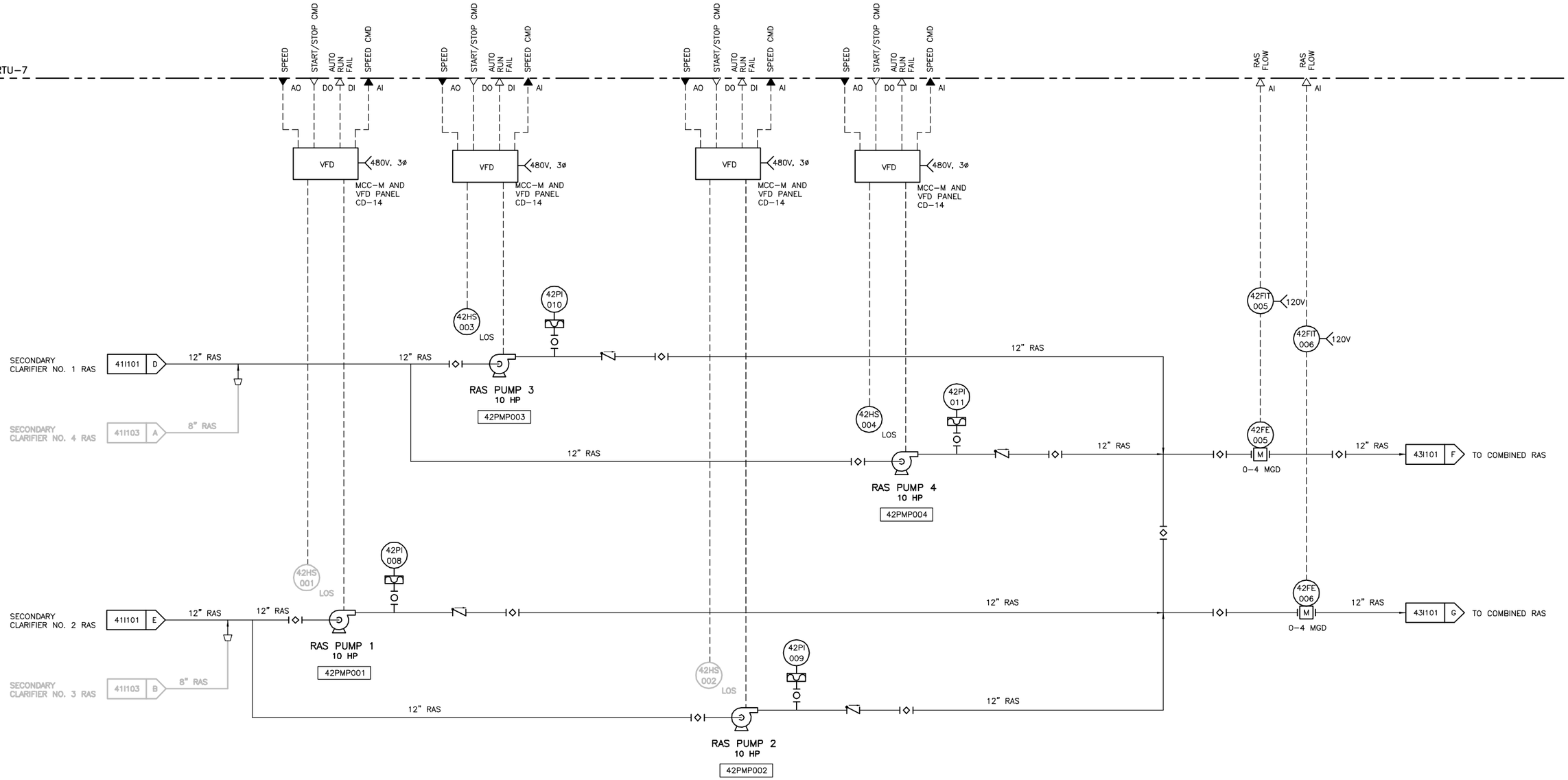

FILE: 215786-421101.dwg
DATE: Oct 06, 2015-4:37:29pm, ranider

HDR Engineering, Inc.

ISSUE	DATE	DESCRIPTION
A	JUNE 2015	ISSUED FOR BID

PROJECT MANAGER	C. OLSON
DESIGNED	W.F. ETTLICH
DESIGNED	
CHECKED	L.D. SMITHEY
DRAWN	E.G. SESPENE
DATE	JUNE 30, 2015
PROJECT NUMBER	215786

REGISTERED PROFESSIONAL ENGINEER
WILLIAM F. ETTLICH
NO. 07625
EXP. 09/30/16
ELECTRICAL
STATE OF CALIFORNIA
06-30-15

CITY OF PINOLE CALIFORNIA 1903

PINOLE/HERCULES
WATER POLLUTION
CONTROL PLANT UPGRADE
CLIENT PN

INSTRUMENTATION

PROCESS AND INSTRUMENTATION DIAGRAM
RAS PUMPING STRUCTURE 1

0 1" 2"

FILENAME	215786-421101
SCALE	NTS

SHEET
42I101

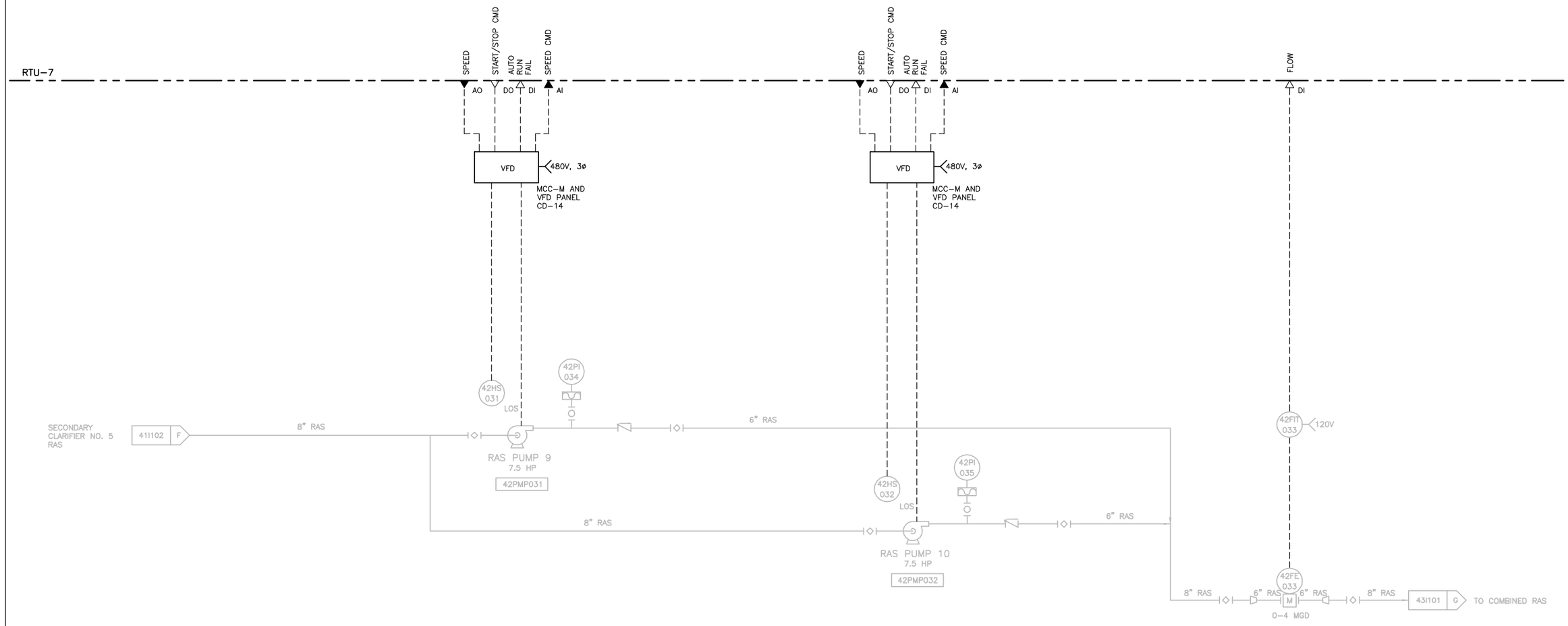

FILE: 215786-421102.dwg
DATE: Oct 06, 2015-4:37:34pm, rsnider

HDR Engineering, Inc.

ISSUE	DATE	DESCRIPTION
A	JUNE 2015	ISSUED FOR BID

PROJECT MANAGER	C. OLSON
DESIGNED	W.F. ETTLICH
DESIGNED	
CHECKED	L.D. SMITHEY
DRAWN	E.G. SESPENE
DATE	JUNE 30, 2015
PROJECT NUMBER	215786

REGISTERED PROFESSIONAL ENGINEER
WILLIAM F. ETTLICH
NO. 07625
EXP. 09/30/16
ELECTRICAL
STATE OF CALIFORNIA
06-30-15

CITY OF PINOLE CALIFORNIA 1903

PINOLE/HERCULES
WATER POLLUTION
CONTROL PLANT UPGRADE
CLIENT PN

INSTRUMENTATION

PROCESS AND INSTRUMENTATION DIAGRAM
RAS PUMPING STRUCTURE 1

0 1" 2"

FILENAME	215786-421102
SCALE	NTS

SHEET **421102**

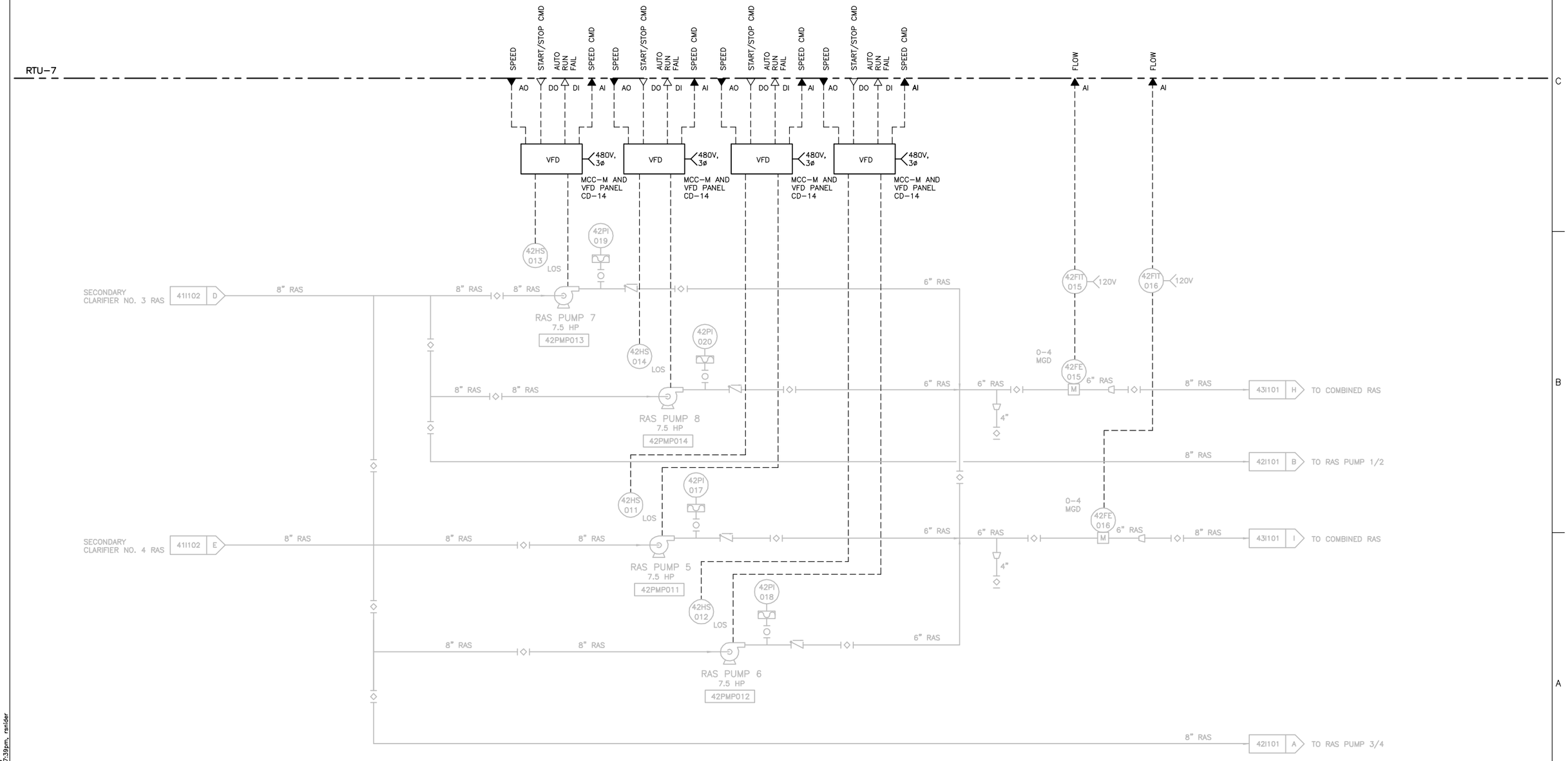

FILE: 215786-42I103.dwg
DATE: Oct 06, 2015-4:37:39pm, ranider

HDR Engineering, Inc.

ISSUE	DATE	DESCRIPTION
A	JUNE 2015	ISSUED FOR BID

PROJECT MANAGER	C. OLSON
DESIGNED	W.F. ETTLICH
DESIGNED	
CHECKED	L.D. SMITHEY
DRAWN	E.G. SESPENE
DATE	JUNE 30, 2015
PROJECT NUMBER	215786

REGISTERED PROFESSIONAL ENGINEER
WILLIAM F. ETTLICH
NO. 07625
EXP. 09/30/16
ELECTRICAL
STATE OF CALIFORNIA
06-30-15

CITY OF PINOLE CALIFORNIA 1903

PINOLE/HERCULES
WATER POLLUTION
CONTROL PLANT UPGRADE
CLIENT PN

INSTRUMENTATION

PROCESS AND INSTRUMENTATION DIAGRAM
RAS PUMPING STRUCTURE 2

0 1" 2"

FILENAME	215786-42I103
SCALE	AS NOTED

SHEET
42I103

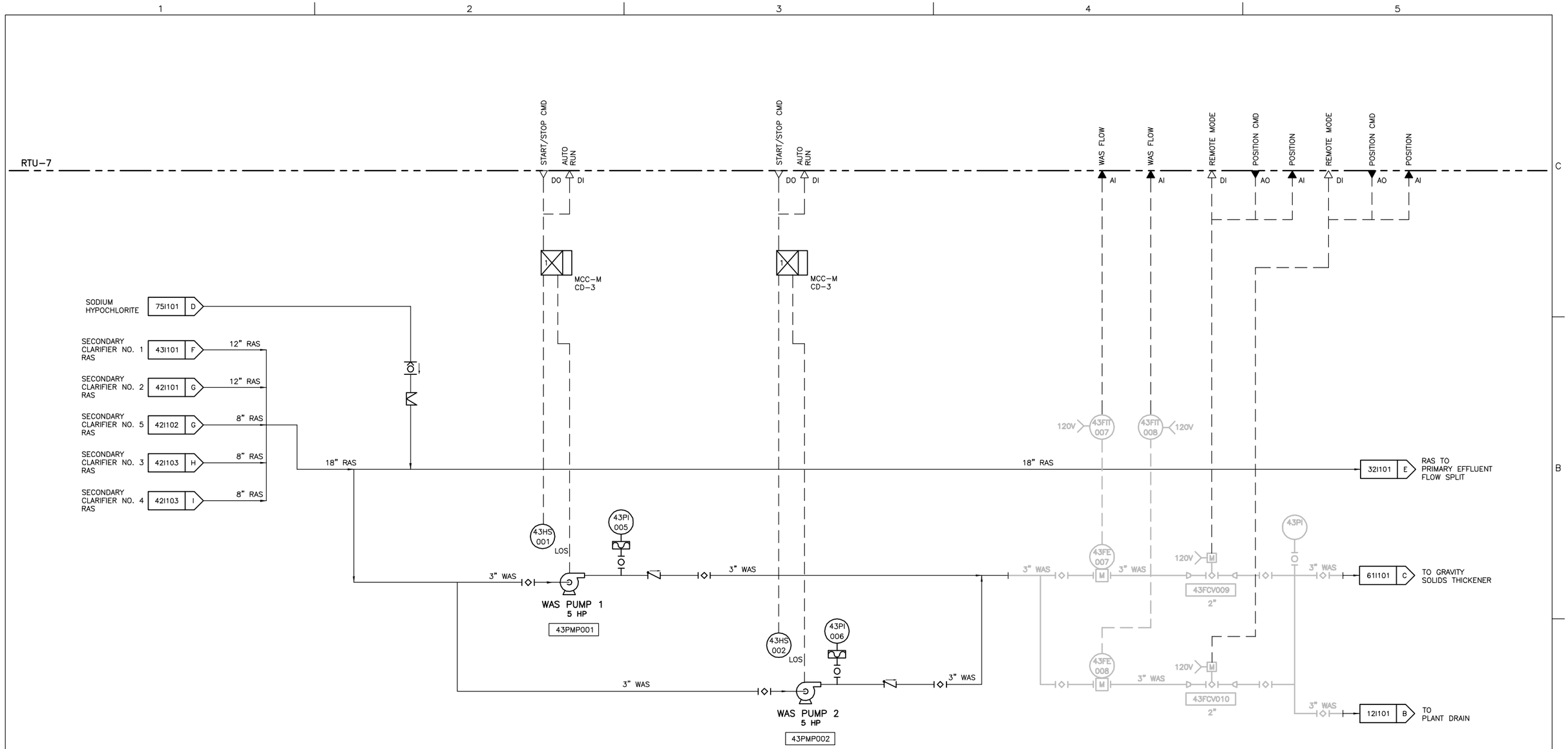

FILE: 215786-43I101.dwg
DATE: Oct 06, 2015-4:37:44pm, rsnider

HDR Engineering, Inc.

ISSUE	DATE	DESCRIPTION
A	JUNE 2015	ISSUED FOR BID

PROJECT MANAGER	C. OLSON
DESIGNED	W.F. ETTLICH
DESIGNED	
CHECKED	L.D. SMITHEY
DRAWN	E.G. SESPENE
DATE	JUNE 30, 2015
PROJECT NUMBER	215786

REGISTERED PROFESSIONAL ENGINEER
WILLIAM F. ETTLICH
NO. 07625
EXP. 09/30/16
ELECTRICAL
STATE OF CALIFORNIA
06-30-15

CITY OF PINOLE CALIFORNIA 1903

PINOLE/HERCULES
WATER POLLUTION
CONTROL PLANT UPGRADE
CLIENT PN

INSTRUMENTATION

PROCESS AND INSTRUMENTATION DIAGRAM WAS PUMPING

0 1" 2"

FILENAME	215786-43I101
SCALE	NTS

SHEET **43I101**

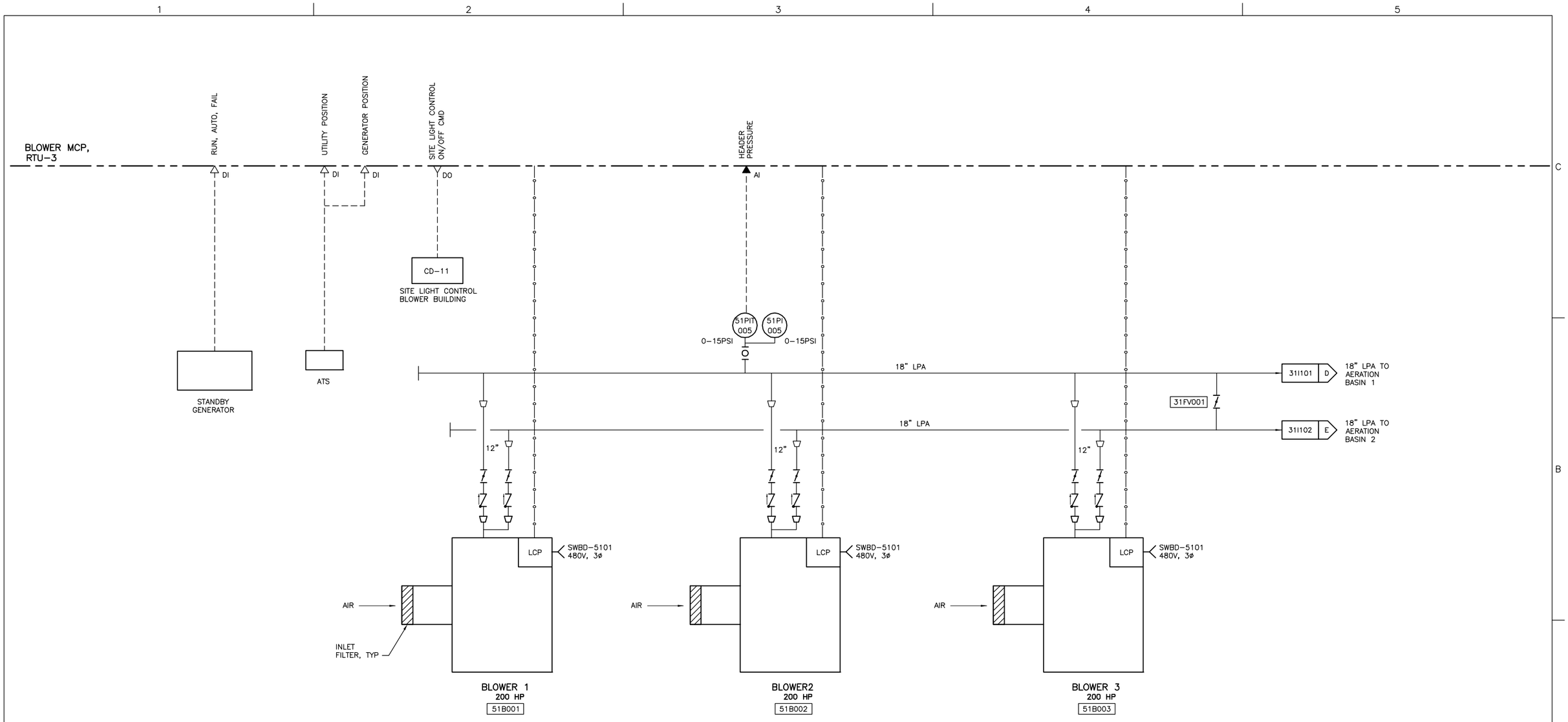

FILE: 215786-51I101.dwg
DATE: Oct 06, 2015-4:37:49pm, ranider

HDR Engineering, Inc.

ISSUE	DATE	DESCRIPTION
A	JUNE 2015	ISSUED FOR BID

PROJECT MANAGER	C. OLSON
DESIGNED	W.F. ETTLICH
DESIGNED	
CHECKED	L.D. SMITHEY
DRAWN	E.G. SESPENE
DATE	JUNE 30, 2015
PROJECT NUMBER	215786

REGISTERED PROFESSIONAL ENGINEER
WILLIAM F. ETTLICH
NO. 07625
EXP. 09/30/16
ELECTRICAL
STATE OF CALIFORNIA
06-30-15

CITY OF PINOLE CALIFORNIA 1903

PINOLE/HERCULES
WATER POLLUTION
CONTROL PLANT UPGRADE
CLIENT PN

INSTRUMENTATION

PROCESS AND INSTRUMENTATION DIAGRAM AERATION BLOWERS

0 1" 2"

FILENAME	215786-51I101
SCALE	NTS

SHEET **51I101**

RTU-4

FLOW AI
FLOW AI
START CYCLE RUN FAIL AUTO DO DI
LEVEL AI
START/STOP CMD RUN FAIL REMOTE DO DI
SPEED CMD AO
START/STOP CMD AUTO RUN FAIL DO DI
SPEED AI
SPEED CMD AO
START/STOP CMD AUTO RUN FAIL DO DI
SPEED AI
FLOW AI
FLOW AI

480V, 3ø
MCC–N CD–6

480V, 3ø
MCC–N CD–4
CD–4
64LCP002
64WSH 003
64WSHP 003

VFD
480V, 3ø
MCC–N CD–7

VFD
480V, 3ø
MCC–N CD–7

61FIT 020 120V
61FE 020 0–300 GPM
PRIMARY SLUDGE 25I101 A
6" PSL
6" PSL
_" SC
SCUM SKIMMER
8" GTO
12I101 B TO PLANT DRAIN

61FIT 021 120V
61FE 021 0–200 GPM
6" WAS
WAS 43I101 C
6" WAS

61HS 030B LOCAL RUN
61HS 030A LOS
0–15FT
61LT 029

1" ARV
4" SC
GRAVITY SLUDGE THICKENER
1 1/2 HP 64GST022
23I101 H SCUM TO DIGESTERS

3W 71I101 C

MSH
TSH

6"
GTSL
6" GTSL
64HS 024 LOS
64TSH 024
0–100 PSI 64PI 023
64PSH 023 SET 60PSI
1" ARV
6" GTSL
GRAVITY THICKENED SLUDGE PUMP 1
5 HP
64PMP024
6" GTSL
6" GTSL

PLANT DRAIN B 12I101
12" PD
61SLG101
THICKENER SCUM PUMP
5 HP
61PMP030

0–100 PSI 64PI 026
64PSH 026 SET 60PSI
64HS 025 LOS
64TSH 025
1" ARV
6" GTSL
6" GTSL
64FIT 027 120V
64FE 027 0–500 GPM
GRAVITY THICKENED SLUDGE PUMP 2
5 HP
64PMP025

6" GTSL

61FIT 028 120V
61FE 028 0–300 GPM
FROM RDT 1 61I102 E
6" TS
6" TS
BLENDED/THICKENED SLUDGE TO DIGESTERS
FROM RDT 2 61I103 G

61I102 D TO RDT 1
61I103 F TO RDT 2

FILE: 215786–61I101.dwg
DATE: Oct 06, 2015–4:37:55pm, rsnider

HDR Engineering, Inc.

ISSUE	DATE	DESCRIPTION
A	JUNE 2015	ISSUED FOR BID

PROJECT MANAGER	C. OLSON
DESIGNED	W.F. ETTLICH
DESIGNED	
CHECKED	L.D. SMITHEY
DRAWN	E.G. SESPENE
DATE	JUNE 30, 2015
PROJECT NUMBER	215786

REGISTERED PROFESSIONAL ENGINEER WILLIAM F. ETTLICH NO. 07625 EXP. 09/30/16 ELECTRICAL STATE OF CALIFORNIA 06-30-15

CITY OF PINOLE CALIFORNIA 1903

PINOLE/HERCULES
WATER POLLUTION
CONTROL PLANT UPGRADE
CLIENT PN

INSTRUMENTATION

PROCESS AND INSTRUMENTATION DIAGRAM THICKENER 2

0 1" 2"

FILENAME	215786–61I101
SCALE	NTS

SHEET **61I101**

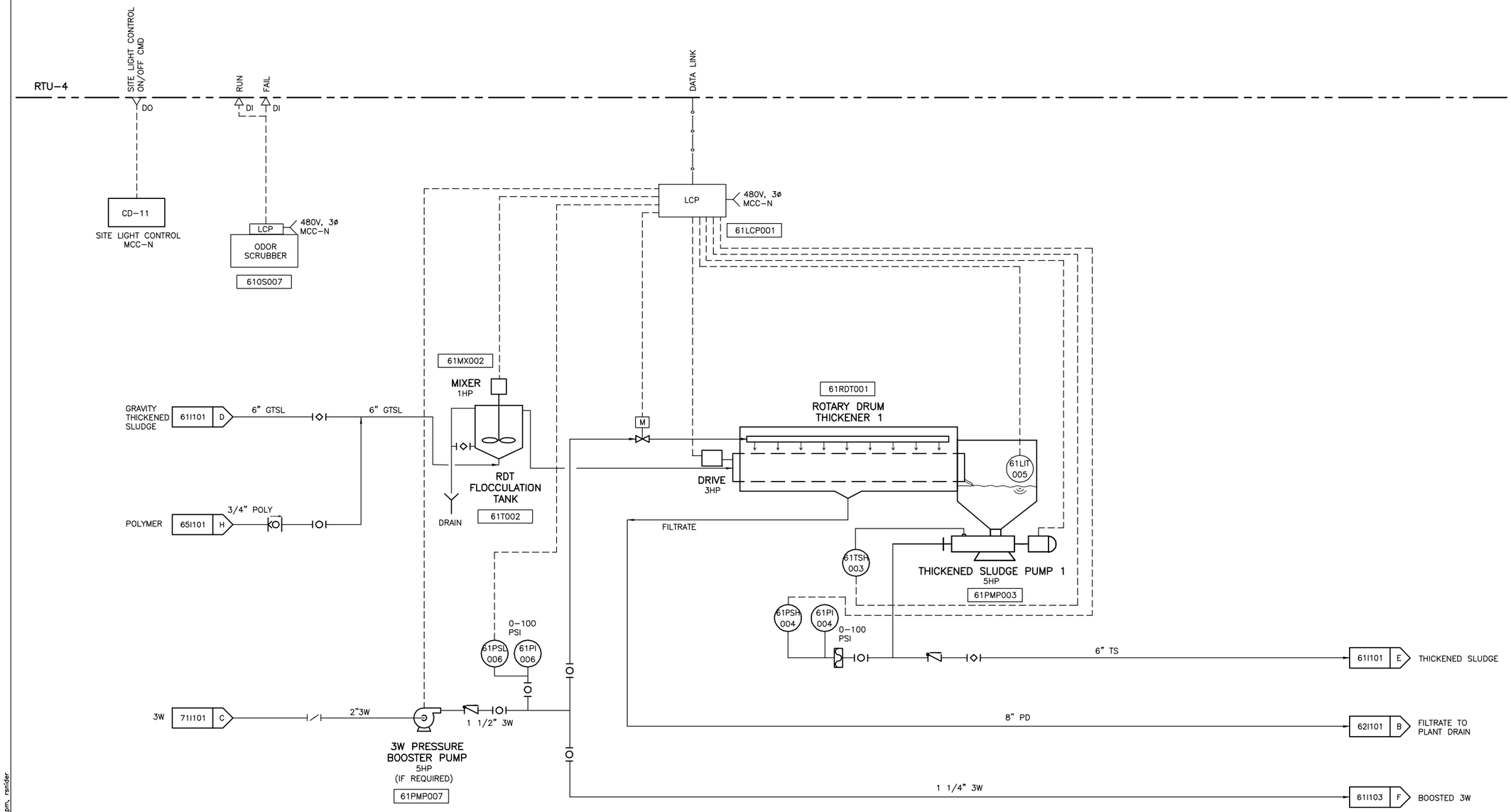

FILE: 215786-61I102.dwg
DATE: Oct 06, 2015--4:38:01pm, rsnider

HDR Engineering, Inc.

ISSUE	DATE	DESCRIPTION
A	JUNE 2015	ISSUED FOR BID

PROJECT MANAGER	C. OLSON
DESIGNED	W.F. ETTLICH
DESIGNED	
CHECKED	L.D. SMITHEY
DRAWN	E.G. SESPENE
DATE	JUNE 30, 2015
PROJECT NUMBER	215786

REGISTERED PROFESSIONAL ENGINEER
WILLIAM F. ETTLICH
NO. 07625
EXP. 09/30/16
ELECTRICAL
STATE OF CALIFORNIA

CITY OF PINOLE CALIFORNIA 1903

PINOLE/HERCULES
WATER POLLUTION
CONTROL PLANT UPGRADE
CLIENT PN

INSTRUMENTATION

PROCESS AND INSTRUMENTATION DIAGRAM THICKENER 1

0 1" 2"

FILENAME	215786-61I102
SCALE	NTS

SHEET **61I102**

RTU–4

DATA LINK

LCP

MCC–N
480V, 3ø

61LCP010

61MX012

MIXER
1HP

GRAVITY THICKENED SLUDGE

61I101 F

6" GTSL

6" GTSL

M

61RDT010

ROTARY DRUM THICKENER 2

RDT FLOCCULATION TANK

DRIVE
3HP

61LIT 015

DRAIN

61T012

3/4" POLY

POLYMER

65I101 J

FILTRATE

61TSH 013

THICKENED SLUDGE PUMP 2
5HP

61PMP013

61PSH 014

61PI 014

0–100 PSI

6" TS

61I101 G

THICKENED SLUDGE

BOOSTED 3W

61I102 F

1 1/4" 3W

8" PD

62I101 B

FILTRATE TO PLANT DRAIN

FILE: 215786–61I103.dwg
DATE: Oct 06, 2015–4:38:08pm rsnider

HDR Engineering, Inc.

ISSUE	DATE	DESCRIPTION
A	JUNE 2015	ISSUED FOR BID

PROJECT MANAGER	C. OLSON
DESIGNED	W.F. ETTLICH
DESIGNED	
CHECKED	L.D. SMITHEY
DRAWN	E.G. SESPENE
DATE	JUNE 30, 2015
PROJECT NUMBER	215786

REGISTERED PROFESSIONAL ENGINEER
WILLIAM F. ETTLICH
NO. 07625
EXP. 09/30/16
ELECTRICAL
STATE OF CALIFORNIA

CITY OF PINOLE CALIFORNIA 1903

PINOLE/HERCULES
WATER POLLUTION
CONTROL PLANT UPGRADE
CLIENT PN

INSTRUMENTATION

PROCESS AND INSTRUMENTATION DIAGRAM THICKENER 2

0 1" 2"

FILENAME	215786–61I103
SCALE	NTS

SHEET
61I103

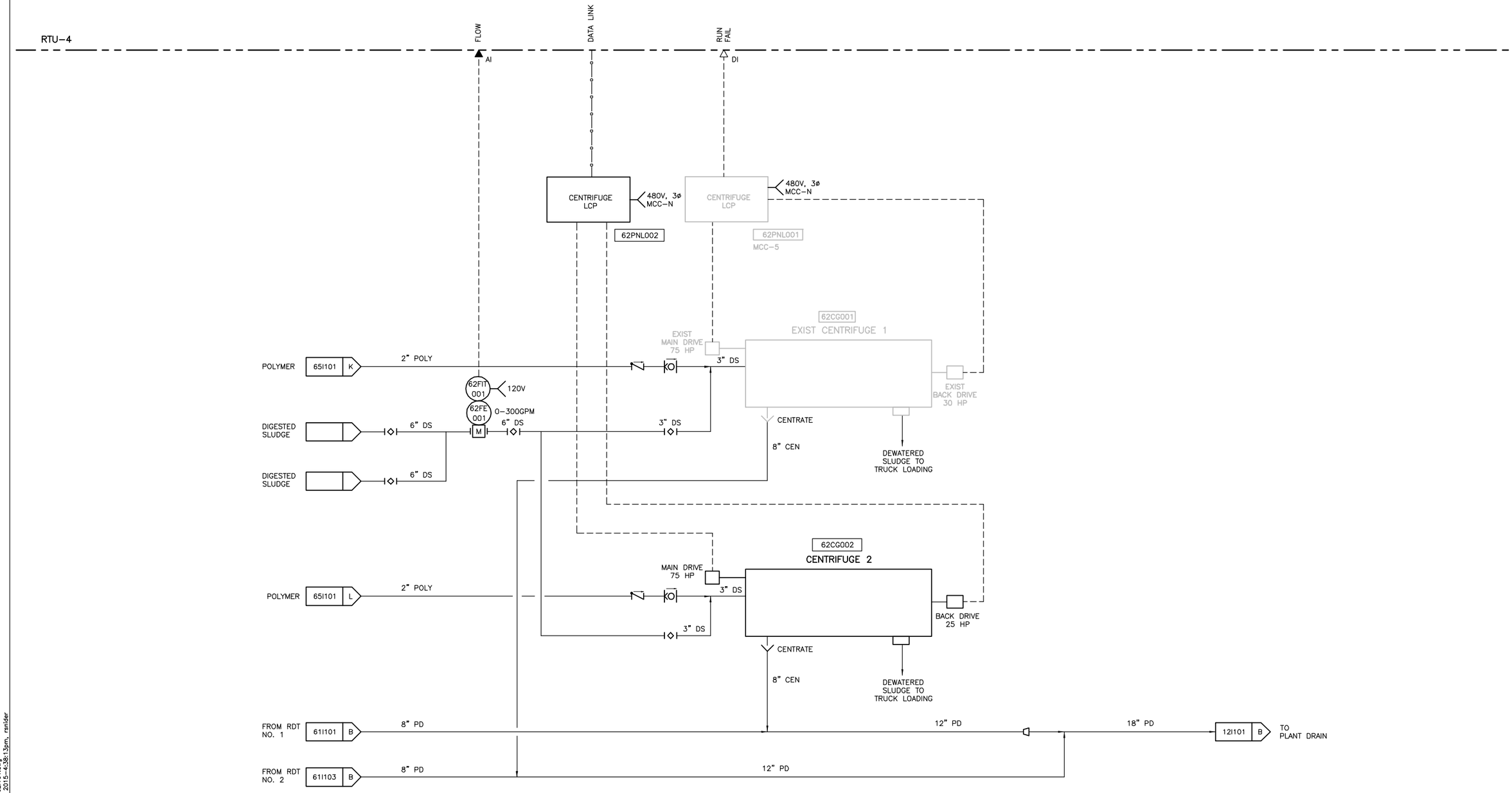

FILE: 215786–62I101.dwg
DATE: Oct 06, 2015–4:38:13pm, rsnider

HDR Engineering, Inc.

ISSUE	DATE	DESCRIPTION
A	JUNE 2015	ISSUED FOR BID

PROJECT MANAGER	C. OLSON
DESIGNED	W.F. ETTLICH
DESIGNED	
CHECKED	L.D. SMITHEY
DRAWN	E.G. SESPENE
DATE	JUNE 30, 2015
PROJECT NUMBER	215786

REGISTERED PROFESSIONAL ENGINEER WILLIAM F. ETTLICH NO. 07625 EXP. 09/30/16 ELECTRICAL STATE OF CALIFORNIA 06-30-15

CITY OF PINOLE CALIFORNIA 1903

PINOLE/HERCULES
WATER POLLUTION
CONTROL PLANT UPGRADE
CLIENT PN

INSTRUMENTATION

PROCESS AND INSTRUMENTATION DIAGRAM SOLIDS DEWATERING

0 1" 2"

FILENAME	215786–62I101
SCALE	NTS

SHEET **62I101**

RTU-4

PACING
RUN FAIL AUTO
AO
DI

ACTIVE
DI

65FSH 007
EYEWASH

EXISTING POLYMER TOTE 1

TOTE MIXER

EXISTING POLYMER TOTE 2

POLYMER SUCTION LINE (LONG ENOUGH TO REACH EITHER TOTE

3/4" POLY

PULSATION DAMPENER
PRESSURE GAUGE
ROTOMETER
4-FUNCTION VALVE (TYP)
POLYMER METERING PUMP
BLENDING UNIT 1
65PBU001

3/4" 2W
2W
3/4" POLY
61I102 H
POLYMER TO THICKENER 1

BLENDING UNIT 2
65PBU002
61I103 J
POLYMER TO THICKENER 2

PACKAGE BLEND SYSTEM

2" 2W
2" POLY
62I101 K
POLYMER TO CENTRIFUGE 1
65PBU003

62I101 L
POLYMER TO CENTRIFUGE 2
65PBU004

PACKAGE BLEND SYSTEM

FILE: 215786-65I101.dwg
DATE: Oct 06, 2015--4:38:18pm rsnider

HDR Engineering, Inc.

ISSUE	DATE	DESCRIPTION
A	JUNE 2015	ISSUED FOR BID

PROJECT MANAGER	C. OLSON
DESIGNED	W.F. ETTLICH
DESIGNED	
CHECKED	L.D. SMITHEY
DRAWN	E.G. SESPENE
DATE	JUNE 30, 2015
PROJECT NUMBER	215786

REGISTERED PROFESSIONAL ENGINEER
WILLIAM F. ETTLICH
NO. 07625
EXP. 09/30/16
ELECTRICAL
STATE OF CALIFORNIA

CITY OF PINOLE CALIFORNIA 1903

PINOLE/HERCULES
WATER POLLUTION
CONTROL PLANT UPGRADE
CLIENT PN

INSTRUMENTATION

PROCESS AND INSTRUMENTATION DIAGRAM SOLIDS POLYMER

0 1" 2"

FILENAME	215786-65I101
SCALE	NTS

SHEET
65I101

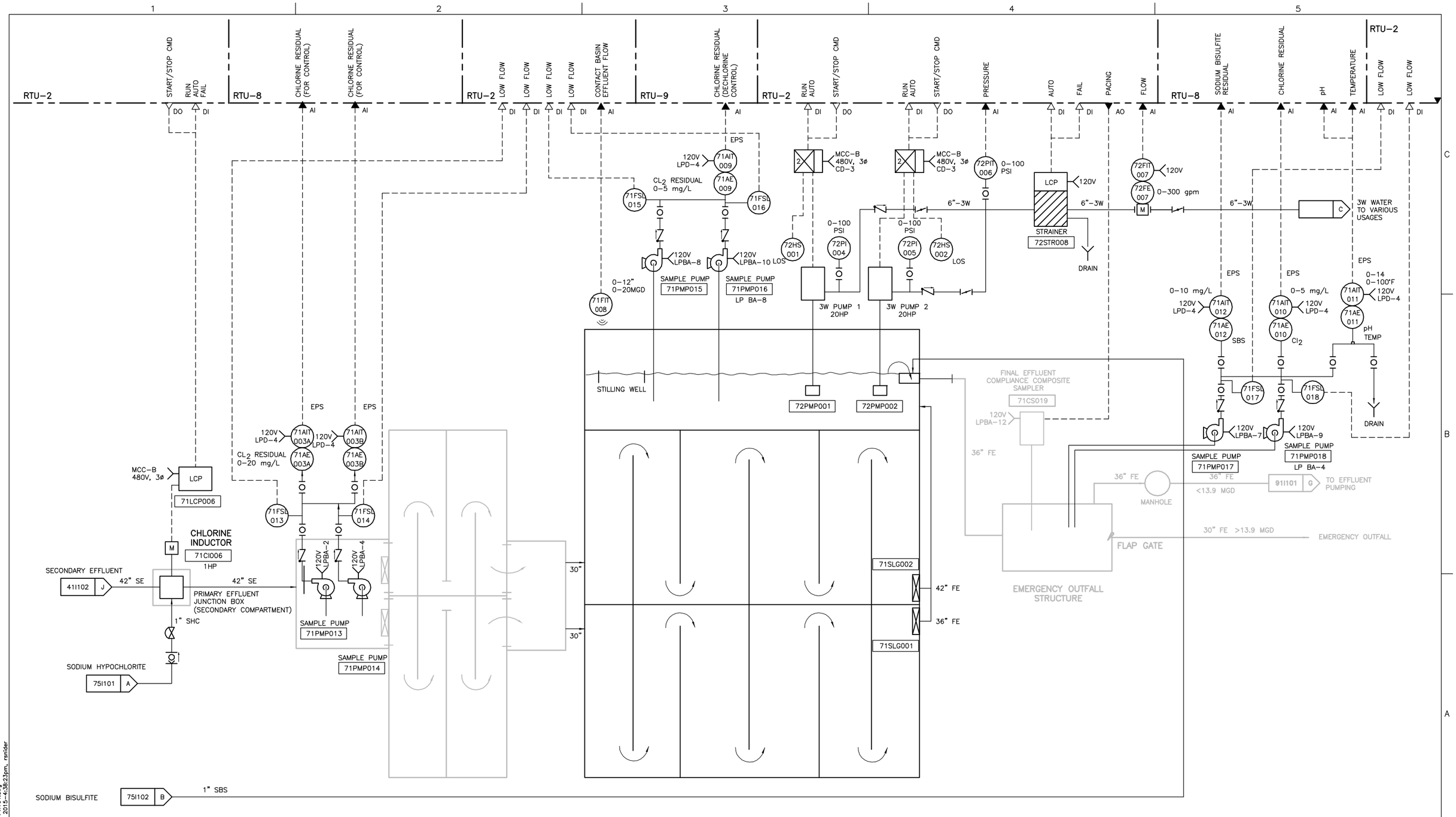

FILE: 215786-71I101.dwg
DATE: Oct 06, 2015-4:38:23pm, rsnider

HDR Engineering, Inc.

ISSUE	DATE	DESCRIPTION
A	JUNE 2015	ISSUED FOR BID

PROJECT MANAGER	C. OLSON
DESIGNED	W.F. ETTLICH
DESIGNED	
CHECKED	L.D. SMITHEY
DRAWN	E.G. SESPENE
DATE	JUNE 30, 2015
PROJECT NUMBER	215786

REGISTERED PROFESSIONAL ENGINEER
WILLIAM F. ETTLICH
NO. 07625
EXP. 09/30/16
ELECTRICAL
STATE OF CALIFORNIA
06-30-15

CITY OF PINOLE CALIFORNIA 1903

PINOLE/HERCULES
WATER POLLUTION
CONTROL PLANT UPGRADE
CLIENT PN

INSTRUMENTATION

PROCESS AND INSTRUMENTATION DIAGRAM CHLORINE CONTACT

0 1" 2"

FILENAME	215786-71I101
SCALE	NTS

SHEET **71I101**

1 2 3 4 5

LEVEL AI | HIGH LEVEL DI | OPEN/CLOSE CMD DO | OPEN CLOSED REMOTE MODE DI | LEVEL AI | OPEN/CLOSE CMD DO | OPEN CLOSED REMOTE MODE DI | ACTIVE DI

PACING AO | START/STOP CMD DO | RUN FAIL DI | PRESSURE AI | FLOW AI

PACING AO | START/STOP CMD DO | RUN FAIL DI | PRESSURE AI | FLOW AI

PACING AO | START/STOP CMD DO | RUN FAIL DI | PRESSURE AI | FLOW AI

PACING AO | START/STOP CMD DO | RUN FAIL DI | PRESSURE AI | FLOW AI

PACING AO | START/STOP CMD DO | RUN FAIL DI | PRESSURE AI | FLOW AI | ACTIVE DI

FILL FITTING

2" SHC FILL

ACCESS

4" VENT

120V RELAY

TANK HEATER KW

7000 GALLONS (INSULATED)

3"

0-12FT DENSITY 1.0

75LIT 005

3" SHC

75LSH 007

SODIUM HYPOCHLORITE STORAGE TANK 1

75T003

M 120V

75FCV010

OVERFLOW

2" SHC

ACCESS

4" VENT

TANK HEATER KW

7000 GALLONS (INSULATED)

3"

0-12FT DENSITY 1.0

75LIT 006

3" SHC

SODIUM HYPOCHLORITE STORAGE TANK 2

75T004

M 120V

75FCV011

OVERFLOW

2" SHC

2" SHC

75FSH 009

SHOWER STORAGE AREA

75FSH 008

SHOWER EFFLUENT P.S.

1/2" VENT

PT

FIT

FE

120V

M

3/4" SHC

3/4" SHC NC

3/4" SHC

SODIUM HYPOCHLORITE 1/2" METERING PUMP 1

1/2" SHC NC

75PMP001

1" SHC

TO PRIMARY EFFLUENT JUNCTION BOX INDUCTION UNIT

71I101 A

1/2" SHC NC

1/2" VENT

PT

FIT

FE

PULSATION DAMPER, TYP

CALIBRATION COLUMN, TYP

120V

M

3/4" SHC

4 FUNCTION VALVE, TYP

3/4" SHC NC

3/4" SHC

SODIUM HYPOCHLORITE 1/2"SHC METERING PUMP 2

1/2" SHC NC

75PMP002

1/2" VENT

PT

FIT

FE

120V

M

3/4" SHC

3/4" SHC NC

3/4" SHC

SODIUM HYPOCHLORITE 1/2" SHC METERING PUMP 3

1/2" SHC NC

75PMP003

1/2" VENT

PT

FIT

FE

120V

M

3/4"SHC

3/4" NC

3/4" HOCL

1/2" SHC NC

SODIUM HYPOCHLORITE 1/2" METERING PUMP 4

1/2" NC

75PMP004

RAS CHLORINATION

1" SHC

43I101 D

PACKAGE FEED PUMP SYSTEM

C B A

FILE: 215786-75I101.dwg
DATE: Oct 06, 2015-4:38:28pm, rsnider

HDR Engineering, Inc.

ISSUE	DATE	DESCRIPTION
A	JUNE 2015	ISSUED FOR BID

PROJECT MANAGER	C. OLSON
DESIGNED	W.F. ETTLICH
DESIGNED	
CHECKED	L.D. SMITHEY
DRAWN	E.G. SESPENE
DATE	JUNE 30, 2015
PROJECT NUMBER	215786

REGISTERED PROFESSIONAL ENGINEER
WILLIAM F. ETTLICH
NO. 07625
EXP. 09/30/16
ELECTRICAL
STATE OF CALIFORNIA
06-30-15

CITY OF PINOLE CALIFORNIA 1903

PINOLE/HERCULES
WATER POLLUTION
CONTROL PLANT UPGRADE
CLIENT PN

INSTRUMENTATION

PROCESS AND INSTRUMENTATION DIAGRAM
SODIUM HYPOCHLORITE STORAGE & FEED SYSTEM

0 1" 2"

FILENAME	215786-75I101
SCALE	NTS

SHEET **75I101**

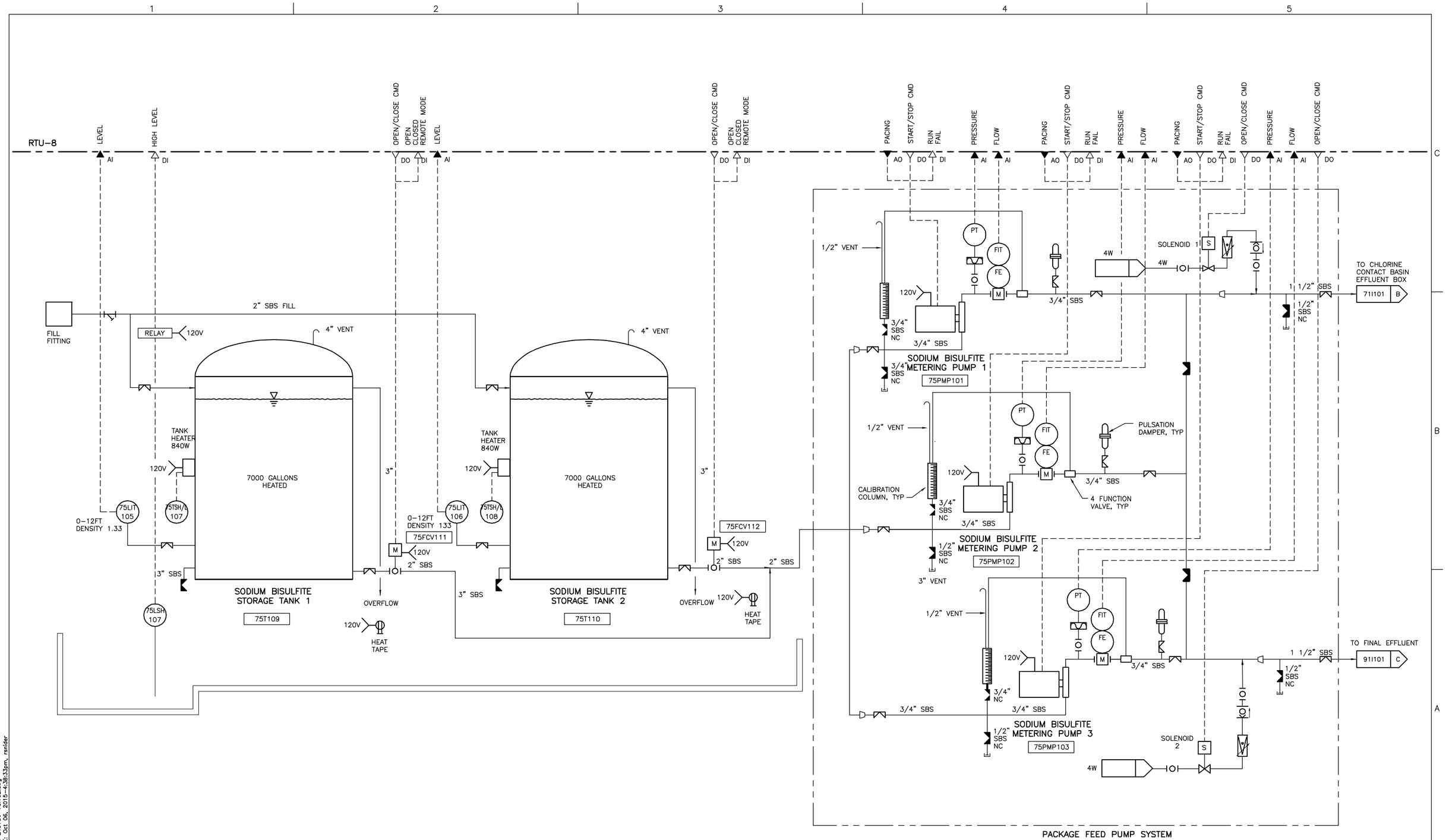

FILE: 215786-75I102.dwg
DATE: Oct 06, 2015-4:38:33pm, rsnider

HDR Engineering, Inc.

ISSUE	DATE	DESCRIPTION
A	JUNE 2015	ISSUED FOR BID

PROJECT MANAGER	C. OLSON
DESIGNED	W.F. ETTLICH
DESIGNED	
CHECKED	L.D. SMITHEY
DRAWN	E.G. SESPENE
DATE	JUNE 30, 2015
PROJECT NUMBER	215786

REGISTERED PROFESSIONAL ENGINEER
WILLIAM F. ETTLICH
NO. 07625
EXP. 09/30/16
ELECTRICAL
STATE OF CALIFORNIA
06-30-15

CITY OF PINOLE CALIFORNIA 1903

PINOLE/HERCULES
WATER POLLUTION
CONTROL PLANT UPGRADE
CLIENT PN

INSTRUMENTATION

PROCESS AND INSTRUMENTATION DIAGRAM
SODIUM BISULFITE STORAGE AND FEED SYSTEM

0 1" 2"

FILENAME	215786-75I102
SCALE	NTS

SHEET
75I102

RTU-2

HIGH LEVEL DI

LEVEL AI

PACING AO | START/STOP CMD DO | RUN FAIL DI | PRESSURE AI | FLOW AI

PACING AO | START/STOP CMD DO | RUN FAIL DI | PRESSURE AI | FLOW AI

PACING AO | START/STOP CMD DO | RUN FAIL DI | PRESSURE AI | FLOW AI

ACTIVE DI

76FSH 006 SHOWER

ACCESS

4" VENT

2" FILL

FILL FITTING

5,000 GALLONS FCL

3"

76LIT 004 0-12FT DENSITY 1.40

120V RELAY

76LSH 005

3"

FERRIC CHLORIDE STORAGE TANK 76T003

DRAIN

2" FCL

OVERFLOW

1/2" VENT

PT

FIT

FE

M

120V

CALIBRATION COLUMN, TYP

3/4" NC

3/4" FCL

4 FUNCTION VALVE, TYP

3/4" FCL

1" FCL

1/2" FCL NC

13I101 A PRIMARY CLARIFIER INFLUENT

FERRIC CHLORIDE METERING PUMP 1 76PMP001

1/2" NC

1" NC

PULSATION DAMPER, TYP

1/2" VENT

PT

FIT

FE

M

120V

3/4" NC

3/4" NC

3/4" FCL

FERRIC CHLORIDE METERING PUMP 2 76PMP002

1/2" NC

1" NC

PULSATION

1/2" VENT

PT

FIT

FE

M

120V

3/4" NC

1" FCL

1/2" FCL NC

12I101 B RAW SEWAGE

3/4" FCL

FERRIC CHLORIDE METERING PUMP 3 76PMP003

1/2" NC

PACKAGE FEED PUMP SYSTEM

FILE: 215786-76I101.dwg
DATE: Oct 06, 2015-4:38:38pm, ranider

HDR Engineering, Inc.

ISSUE	DATE	DESCRIPTION
A	JUNE 2015	ISSUED FOR BID

PROJECT MANAGER	C. OLSON
DESIGNED	W.F. ETTLICH
DESIGNED	
CHECKED	L.D. SMITHEY
DRAWN	E.G. SESPENE
DATE	JUNE 30, 2015
PROJECT NUMBER	215786

REGISTERED PROFESSIONAL ENGINEER WILLIAM F. ETTLICH NO. 07625 EXP. 09/30/16 ELECTRICAL STATE OF CALIFORNIA 06-30-15

CITY OF PINOLE CALIFORNIA 1903

PINOLE/HERCULES WATER POLLUTION CONTROL PLANT UPGRADE CLIENT PN

INSTRUMENTATION

PROCESS AND INSTRUMENTATION DIAGRAM FERRIC CHLORIDE STORAGE AND FEED SYSTEM

0 1" 2"

FILENAME	215786-76I101
SCALE	NTS

SHEET 76I101

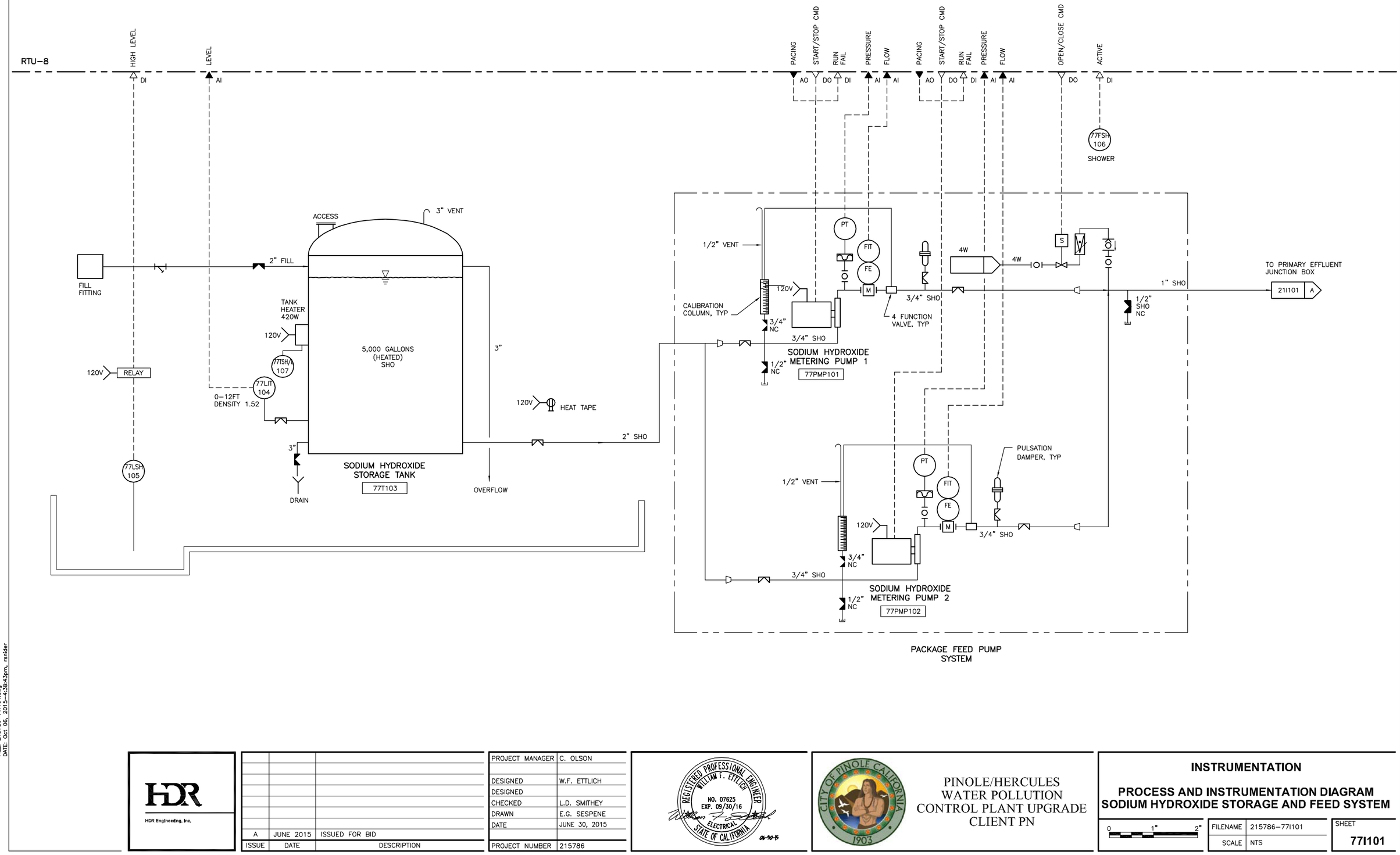

FILE: 215786-77I101.dwg
DATE: Oct 06, 2015-4:38:43pm, rsnider

HDR Engineering, Inc.

ISSUE	DATE	DESCRIPTION
A	JUNE 2015	ISSUED FOR BID

PROJECT MANAGER	C. OLSON
DESIGNED	W.F. ETTLICH
DESIGNED	
CHECKED	L.D. SMITHEY
DRAWN	E.G. SESPENE
DATE	JUNE 30, 2015
PROJECT NUMBER	215786

REGISTERED PROFESSIONAL ENGINEER
WILLIAM F. ETTLICH
NO. 07625
EXP. 09/30/16
ELECTRICAL
STATE OF CALIFORNIA

CITY OF PINOLE CALIFORNIA 1903

PINOLE/HERCULES
WATER POLLUTION
CONTROL PLANT UPGRADE
CLIENT PN

INSTRUMENTATION

PROCESS AND INSTRUMENTATION DIAGRAM SODIUM HYDROXIDE STORAGE AND FEED SYSTEM

0 1" 2"

FILENAME	215786-77I101
SCALE	NTS

SHEET **77I101**

EXISTING RTU–6

START/STOP DO
RUN/FAIL DI
FLOW AI
POSITION CMD AO
POSITION AI
REMOTE MODE DI

EXISTING PACKAGE WASTE GAS BURNER EQUIPMENT, NOTE 1

WASTE GAS BURNER
85BNR301

85TE 301
FLAME DETECTOR

1" NG

120VAC
LCP
65LCP300

85PI 301

EXISTING FLAME CHECK, NOTE 1

EXIST NG SUPPLY

1" NG

S

85MME301A

85SV300A

1" NG

85FE300

1" NG

S

1" NG

85SV300B

85MME301B

1/2" NG

120VAC
LCP
85LCP302

120VAC
85FIT 302
120VAC
85FE 302

M

85ZT 302

EXISTING FLAME

EXIST LSG

8" LSG

4" LSG

4" LSG

2" LSG

M

2" LSG

85CV302

4" LSG

85MME302

4" LSG

4" LSG (BY–PASS)

NC

1" LSG

DT

85DT302

CONDENSATE DRAIN

2" LSG (VENT)

2" LSG

4" LSG

2" LSG

CU8011

C

3/4" 3W

85PRV111

2" LSG

1/2" 3W

D

NOTES:

1. ALL EXISTING EQUIPMENT FOR PACKAGE WASTE GAS BURNER WITHIN OUTLINE TO BE REMOVED AND REINSTALLED BY CONTRACTOR AS SHOWN ON DRAWINGS.

FILE: 215786–85I101.dwg
DATE: Oct 06, 2015–4:38:48pm, rsnider

HDR Engineering, Inc.

ISSUE	DATE	DESCRIPTION
A	JUNE 2015	ISSUED FOR BID

PROJECT MANAGER	C. OLSON
DESIGNED	W.F. ETTLICH
DESIGNED	
CHECKED	L.D. SMITHEY
DRAWN	E.G. SESPENE
DATE	JUNE 30, 2015
PROJECT NUMBER	215786

REGISTERED PROFESSIONAL ENGINEER
WILLIAM F. ETTLICH
NO. 07625
EXP. 09/30/16
ELECTRICAL
STATE OF CALIFORNIA
06-30-15

CITY OF PINOLE CALIFORNIA 1903

PINOLE/HERCULES
WATER POLLUTION
CONTROL PLANT UPGRADE
CLIENT PN

INSTRUMENTATION

PROCESS AND INSTRUMENTATION DIAGRAM DIGESTER GAS FLARE SYSTEM

0 1" 2"

FILENAME	215786–85I101
SCALE	NTS

SHEET
85I101

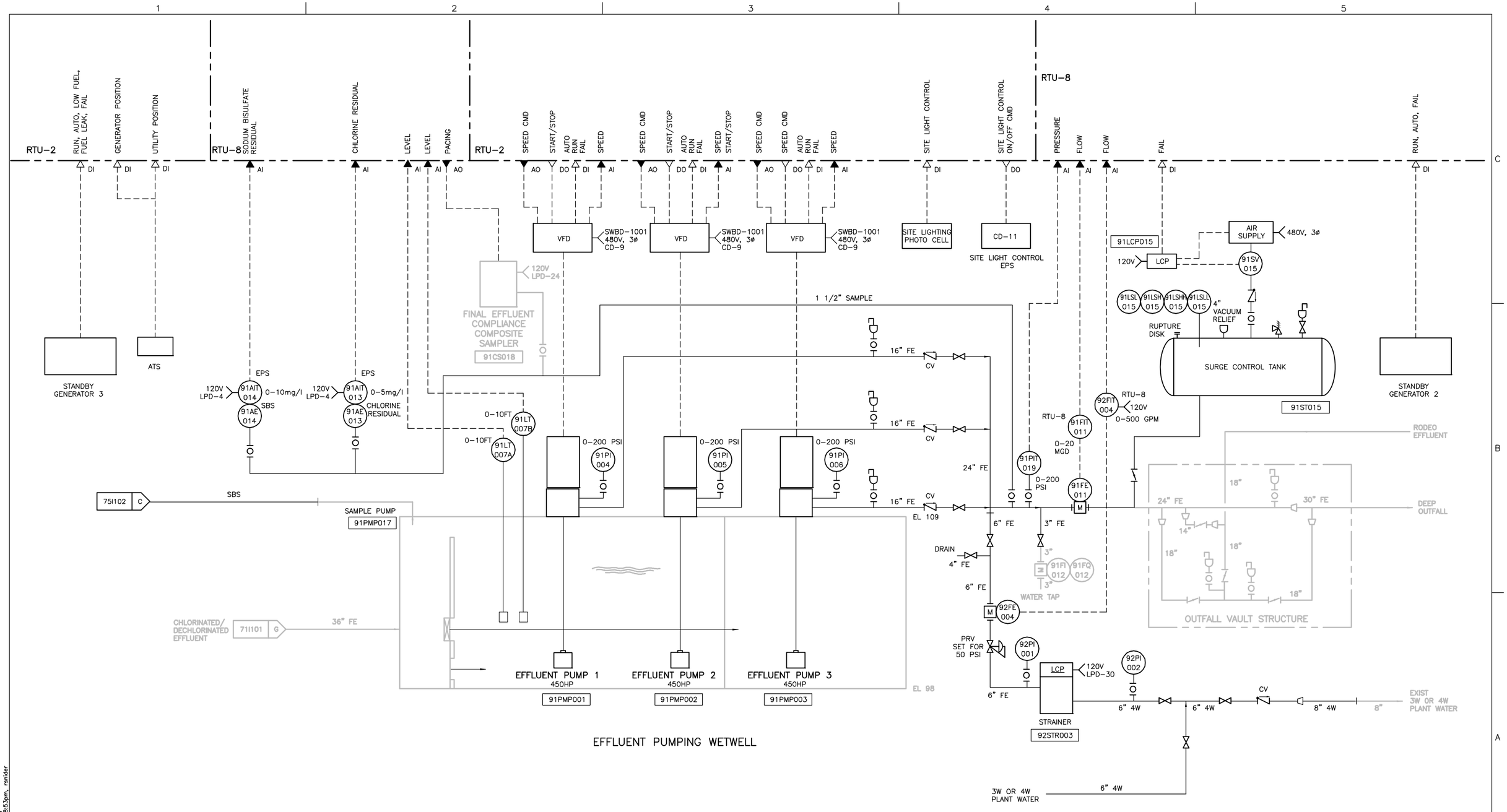

EFFLUENT PUMPING WETWELL

FILE: 215786-91I101.dwg
DATE: Oct 06, 2015-4:38:53pm, rsnider

HDR Engineering, Inc.

ISSUE	DATE	DESCRIPTION
A	JUNE 2015	ISSUED FOR BID

PROJECT MANAGER	C. OLSON
DESIGNED	W.F. ETTLICH
DESIGNED	
CHECKED	L.D. SMITHEY
DRAWN	E.G. SESPENE
DATE	JUNE 30, 2015
PROJECT NUMBER	215786

REGISTERED PROFESSIONAL ENGINEER
WILLIAM F. ETTLICH
NO. 07625
EXP. 09/30/16
ELECTRICAL
STATE OF CALIFORNIA
06-30-15

CITY OF PINOLE CALIFORNIA 1903

PINOLE/HERCULES
WATER POLLUTION
CONTROL PLANT UPGRADE
CLIENT PN

INSTRUMENTATION

PROCESS AND INSTRUMENTATION DIAGRAM EFFLUENT PUMPING

0 1" 2"

FILENAME	215786-91I101
SCALE	NTS

SHEET 91I101